GOSSEN METRAWATT

CAMILLE BAUER

INDUSTRIAL MEASURING SOLUTIONS

2018/2019

MAIN CATALOGUE

WELCOME TO
CAMILLE BAUER METRAWATT AG.

Operating as a leading provider of high-quality instrumentation, we have pursued the goal of making electric engineering processes safer, more transparent and thus more efficient for more than 70 years.

Camille Bauer Metrawatt AG is an internationally operating enterprise specialised in solutions for heavy current monitoring and position sensors for industrial applications.

Camille Bauer Metrawatt AG is domiciled in Switzerland and part of the GMC-Instruments Group.

Camille Bauer Metrawatt AG is a Swiss company domiciled in Wohlen in the Canton of Aargau.
At this location, we develop and produce our own products. We are active internationally and export more than 90 % of our products and services to destinations all over the world.

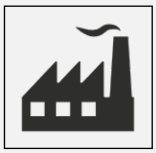

Our products are designed especially for industrial use and ensure the smooth operation of plants, production and processes due to their high quality in terms of accuracy, reliability and longevity.

In the area of **POWER SYSTEM MONITORING**, we offer a broad portfolio from a simple measuring transducer through to multifunctional system modules. Our instruments acquire variables of state, energy consumption and monitor the quality of the electric grid.

In our **POSITION SENSORS** portfolio, we offer solutions for angular position and inclination measurement. Our products range from a simple measuring core through to robust measuring transmitters for application in rough environments.

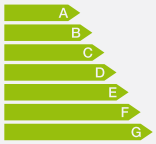

To ensure the careful use of resources and for sustainable cost savings, we offer complete solutions in the field of **ENERGY MANAGEMENT** from simple energy meters through to complete data management software.

OVERVIEW

01 POWER SYSTEM MONITORING
Measurement solutions for electrical power systems

02 POSITION SENSORS
Measurement solutions for positioning tasks

03 ENERGY MANAGEMENT
Professional energy data acquisition for industry and building engineering

04 SERVICES
Documentation - On-site service - Certification

05 BASICS
Environmental testing - Electromagnetic compatibility - Explosion protection

Further fields of the GMC-Instruments Group:

PHOTOGRAPHY

TEST AND MEASUREMENT

MEDICAL ENGINEERING

POWER SYSTEM MONITORING

The liberalisation of the energy markets and the globally increasing environmental awareness define a high degree of responsibility for companies: They are to treat power as a precious raw material and safeguard the management of this resource free of any losses. And this without any gaps: From its generation and transport through to its supply to and consumption at plants and households.
For these new and particularly varied challenges, Camille Bauer Metrawatt provides a wide spectrum of innovative and high-performance products.

Our extensive range of products perwith perfect covering of the most varied measuring tasks.
The instruments are manufactured according to individual customer specifications or adapted to requirements in terms of functionality to guarantee optimum results wherever they are employed:
Customised measuring performance has always been part of the service of Camille Bauer Metrawatt.

CONTENT

CHAPTER - PAGE	HEAVY CURRENT MONITORING
01 - 5	Overview power system monitoring
01 - 6	Unifunctional transducers for top-hat rail
01 - 17	Multifunctional instruments for top-hat rail
01 - 26	Multifunctional instruments display / panel
01 - 39	Power quality
01 - 43	Monitoring and controlling
01 - 49	Signal adjustment
01 - 50	Overview signal adjustment
01 - 53	Passive signal converters
01 - 58	Active signal converters
01 - 66	Multifunctional signal converters
01 - 77	Current transformers
01 - 73	Accessories
01 - 75	Software

UNIFUNCTIONAL TRANSDUCERS FOR TOP-HAT RAIL

I / U / P / f / φ WITHOUT DISPLAY
Page 01 - 7

I, U, f AND P WITH DISPLAY
Page 01 - 16

MULTIFUNCTIONAL INSTRUMENTS FOR TOP-HAT RAIL

SINEAX DM5000
Page 01 - 19

SINEAX DM5X
Page 01 - 21

SINEAX CAM
Page 01 - 22

THE CLASSICS
Page 01 - 25

MULTIFUNCTIONAL INSTRUMENTS DISPLAY / PANEL

AM-SERIES
Page 01 - 26

APLUS
Page 01 - 31

SIRAX-SERIES
Page 01 - 34

THE CLASSICS
Page 01 - 36

POWER QUALITY

PQ-SERIES
Page 01 - 40

MAVOSYS 10
Page 01 - 42

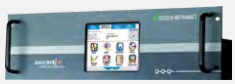

PQ EVALUATION SOFTWARE
Page 01 - 42

MONITORING AND CONTROLLING

Customized solutions
Videographic recorders
Data management

CENTRAX-SERIES
Page 01 - 44

VIDEOGRAPHIC RECORDERS
Page 01 - 46

DATA MANAGEMENT SOFTWARE
Page 01 - 48

SIGNAL ADJUSTMENT

Signal converters
Videographic recorders

PASSIVE
Page 01 - 53

ACTIVE
Page 01 - 58

MULTIFUNCTIONAL
Page 01 - 66

CURRENT TRANSFORMERS
Page 01 - 77

UNIFUNCTIONAL TRANSDUCERS FOR TOP-HAT RAIL

These mostly analog based devices are produced as requested by the customer. They convert a heavy-current quantity into a proportional analog DC output signal. Therefore they are suited to a specific measurement task.

Alternating current transducers are available in different qualities. If the input current is almost sinusoidal a more cost-effective device can be used than for distorted currents, where the measurement of the RMS value is more complex.

Features	I542	I538	I552
Measurement of distorted alternating currents			▪
RMS value measurement			▪
2 measuring ranges	▪		▪
Adjustable maximum value of the measuring range	O	O	S
Without power supply	▪		

O = optional S = standard

Alternating voltage transducers are also divided in different application categories.
Here as well sinusoidal and distorted input signals are distinguished.

Features	U543	U539	U553	U554
Measurement of distorted alternating voltages			▪	▪
RMS value measurement (standard)			▪	▪
Adjustable maximum value of the measuring range (option)	▪	▪	▪	
Different characteristics (primary value scale, step)				▪
Without power supply (standard)	▪			
2-wire technology with 4 …20 mA output (option)		▪		

Transducers for frequency, phase angle or their differences.

SINEAX P530 / Q531

- Monitoring of power demand
- Nominal voltages up to 690 V, nominal current up to 6 A
- Applicable for display, recording, monitoring, controlling
- Connection via transformer or directly

Transducers for active and reactive power are available for different systems.

SINEAX F534 / SINEAX F535 / SINEAX G536 / SINEAX G537

- Frequency (SINEAX F534), frequency difference (SINEAX F535)
- Phase angle (SINEAX G536), phase angle difference (SINEAX G537)
- Determining the system frequency stability
- Monitoring of the reactive power requirement
- Determination of characteristic value for reactive power compensation
- Applicable for display, recording, monitoring, controlling

SINEAX I542

Current transducer to measure sinusoidal alternating currents, without power supply connection.

CUSTOMER BENEFIT

- Without power supply connection, low wiring expenditure
- Standard als GL (Germanischer Lloyd), suitable for ships

TECHNICAL DATA

Meas. input:	0…1 A / 5 A, 0…1.2 A / 6 A or customised (0…0.5 A to 0…7.5 A, only one measuring range), nominal frequency 50/60 Hz
Meas. output:	0…1 mA, 0…5 mA, 0…10 mA, 0…20 mA or 0…10 V or customised (0…1 V to 0…<10 V)
Accuracy:	Class 0.5 at 15…30 °C
H x W x D:	69.1 x 35 x 112.5 mm

STOCK VARIANTS

Article No.	Measuring range, switchable	Output signal
129 610	0…1 A / 5 A	0…20 mA
136 433	0…1.2 A / 6 A	0…20 mA

To measure currents with high harmonic content or distorted sinusoidal form SINEAX I552 should be used.

SINEAX I538

Current transducer to measure sinusoidal alternating currents, with power supply connection.

CUSTOMER BENEFIT

- Also available in cost-effective 2-wire technology
- Standard als GL (Germanischer Lloyd), suitable for ships

TECHNICAL DATA

Meas. input:	0…1 A, 0…5 A or customised 0…0.8 A to 0…1.2 A or 0…4 A to 0…6 A, nominal frequency 50/60 Hz
Meas. output:	0…20 mA, 4…20 mA, 4…20 mA 2-wire technology, 0…10 V or customised
Accuracy:	Class 0.5 at 15…30 °C
Power supply:	24–60 V AC/DC, 85–230 V AC/DC or 230 V AC 50/60 Hz or 24 V DC or 24 V DC via output circuit in 2-wire technology
H x W x D:	69.1 x 35 x 112.5 mm

STOCK VARIANTS

Article No.	Measuring range	Output signal	Power supply
137 431	0…1 A	4…20 mA	230 V AC, 4-wire connection
137 449	0…5 A	4…20 mA	230 V AC, 4-wire connection
146 979	0…1 A	4…20 mA	24 V DC, 4-wire connection
136 590	0…1 A	4…20 mA	24 V DC, 2-wire technology
146 987	0…5 A	4…20 mA	24 V DC, 4-wire connection
136 607	0…5 A	4…20 mA	24 V DC, 2-wire technology

To measure currents with high harmonic content or distorted sinusoidal form SINEAX I552 should be used.

SINEAX I552

Current transducer to measure sinusoidal or distorted alternating currents, with power supply connection.

CUSTOMER BENEFIT

- RMS value measurement up to crest factor 6
- 2 measuring ranges
- Possibility of adjusting the maximum value of the measuring range on site
- Standard as GL (Germanischer Lloyd), suitable for ships
- Can also be used for 400 Hz systems

TECHNICAL DATA

Meas. input:	0…1 A / 5 A, 0…1.2 A / 6 A or customised (0…0.1 / 0.5 A to 0…<1.2 / 6 A) Nominal frequency 50/60 Hz or 400 Hz
Meas. output:	0…20 mA, 4…20 mA, 0…10 V or customised Setting time 50 ms or 300 ms
Accuracy:	Class 0.5 at 15…30 °C
Power supply:	24 – 60 V AC/DC, 85 – 230 V AC/DC or 24 V AC / 24 – 60 V DC, connection on the low-voltage side
H x W x D:	69.1 x 70 x 112.5 mm

STOCK VARIATIONS

Article No.	Measuring range, switchable	Output signal	Power supply	Setting time
133 760	0…1 / 5 A, 50/60 Hz	4…20 mA	85 – 230 V, DC or 40 – 400 Hz	300 ms

SINEAX U543

Voltage transducer to measure sinusoidal alternating voltages, without power supply connection.

CUSTOMER BENEFIT

- Cost-effective measurement of voltages with low harmonic content
- Without power supply connection, low wiring expenditure

TECHNICAL DATA

Meas. input:	Different ranges from 0…100/√3 to 0…500 V or customized 0…20 V to 0…600 V, maximum 300 V nominal value of the system against earth Nominal frequency 50/60 Hz, maximum value of the measuring range is fixed or can be set via potentiometer (approx. ±10%)
Meas. output:	0…1 mA, 0…5 mA, 0…10 mA, 0…20 mA or 0…10 V or customised (0…1 V to 0…<10 V)
Accuracy:	Class 0.5 at 15…30 °C
H x W x D:	69.1 x 35 x 112.5 mm

STOCK VARIANTS

Article No.	Description	Output signal
137 142	0…120 V, 50/60 Hz	0…20 mA

To measure voltages with high harmonic content or distorted sinusoidal form SINEAX U553 or U554 should be used.

SINEAX U539

Voltage transducer to measure sinusoidal alternating voltages, without power supply connection.

CUSTOMER BENEFIT

- Cost-effective measurement of voltages with low harmonic content
- Possibility of adjusting the maximum value of the measuring range on site

TECHNICAL DATA

Meas. input:	0…100 V, 0…250 V, 0…500 V or customised 0…50 V to 0…600 V Nominal frequency 50/60 Hz
Meas. output:	0…20 mA, 4…20 mA, 4…20 mA 2-wire technology, 0…10 V or customised
Accuracy:	Class 0.5 at 15…30 °C, Class 1 if Un >500 V
Power supply:	24–60 V AC/DC, 85–230 V AC/DC or 230 V AC 50/60 Hz or 24 V DC or 24 V DC via output circuit in 2-wire technology
H x W x D:	69.1 x 35 x 112.5 mm

STOCK VARIANTS

Article No.	Measuring range	Output signal	Power supply
126 971	0…500 V, 50/60 Hz	4…20 mA	24 V DC, 2-wire connection

To measure voltages with high harmonic content or distorted sinusoidal form SINEAX U553 or U554 should be used.

SINEAX U553

Voltage transducer to measure sinusoidal or distorted alternating currents, with power supply connection.

CUSTOMER BENEFIT

- RMS value measurement up to crest factor 6
- Possibility of adjusting the maximum value of the measuring range on site
- Standard as GL (Germanischer Lloyd), suitable for ships
- Can also be used for 400 Hz systems

TECHNICAL DATA

Meas. input:	Different ranges from 0…100/√3 to 0…500 V or customized 0…20 V to 0…690 V, maximum 400 V nominal value of the system against earth Nominal frequency 50/60 Hz or 400 Hz, maximum value of the measuring range can be set via potentiometer (approx. ±15%)
Meas. output:	0…20 mA, 4…20 mA, 0…10 V or customized 0…1 to 0…20 mA or 0.2…1 to 4…20 mA or 0…1 to 0…10 mA or 0.2…1 to 2…10 V Setting time 50 ms or 300 ms
Accuracy:	Class 0.5 at 15…30 °C
Power supply:	24–60 V AC/DC or 85–230 V AC/DC (also from measurement input) or 24 V AC / 24–60 V DC, connection on the low-voltage side
H x W x D:	69.1 x 70 x 112.5 mm

SINEAX U554

Voltage transducer to measure sinusoidal or distorted alternating currents, with power supply connection.

CUSTOMER BENEFIT

- RMS value measurement up to crest factor 6
- The measuring range which is of interest can be highlighted

TECHNICAL DATA

Meas. input:	Minimum value 0 V, maximum value of the measuring range E3 = 20…690 V, Step point 0.1 · E3…0.9 · E3 Nominal frequency 50/60 Hz or 400 Hz
Meas. output:	Maximum value A3 = 1 mA, 5 mA, 10 mA, 20 mA, 10 V or customised 1…20 mA or 1…10 V

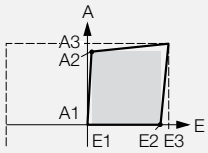

$E1 = 0$
$0.1 \cdot E3 \leq E2 \leq 0.9 \cdot E3$
$A1 = 0$
$A1 \leq A2 \leq 0.9 \cdot A3$

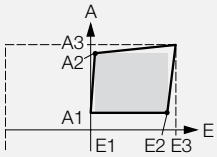

$E1 = 0$
$0.1 \cdot E3 \leq E2 \leq 0.9 \cdot E3$
$A1 = 0.2 \cdot A3$
$A1 \leq A2 \leq 0.9 \cdot A3$

Accuracy:	Class 0.5 at 15…30 °C
Power supply:	24–60 V AC/DC or 85–230 V AC/DC (also from measurement input) 230 V AC 50/60 Hz or 24 V AC / 24–60 V DC, connection on the low-voltage side
H x W x D:	69.1 x 70 x 112.5 mm

SINEAX P530/Q531

Power transducer to measure the active power/reactive power of a single-phase alternating current or a three-phase current.

For single-phase system

For 3/4-wire three-phase system

CUSTOMER BENEFIT

- Monitoring of power consumption in energy distribution systems and process engineering
- Determination of the chronological progression of the power input
- Avoidance of under and overload situations, load control
- Monitoring of rotating machines
- Monitoring for blockages, e.g. in conveyor facilities
- Monitoring of energy distribution
- Output signal useable for indication, registration, monitoring and control
- Safety by galvanic isolation and shock-proof terminals (IP20)
- Standard as GL (Germanischer Lloyd), suitable for ships

TECHNICAL DATA

Meas. input:	Single-phase alternating current, 3-wire three-phase current with balanced/ unbalanced loads or 4-wire three-phase current with balanced (only P530) / unbalanced loads Nominal voltage Un 100…115 V, 200…230 V, 380…440 V, 600…690 V or 100…690 V Nominal current In 1 A, 5 A or customised (1…6 A) Maximum value of the measuring range ≥0.75 to 1.3 · nominal output, unipolar or bipolar Nominal frequency 50/60 Hz, sinusoidal
Meas. range:	P530: Maximum value ≤0.75 to 1.3 · nominal output, unipolar or bipolar Q531: Maximum value ≤0.5 to 1.0 · nominal output, unipolar or bipolar
Meas. output:	Maximum output value 1 mA, 2.5 mA, 5 mA, 10 mA, 20 mA, 10 V or customised 1…20 mA or 1…10 V Output signal unipolar, bipolar or live-zero Setting time <300 ms
Meas. principle:	TDM method
Accuracy:	Class 0.5 at 15…30 °C
Power supply:	24–60 V AC/DC, 85–230 V AC/DC, ≥85–230 V AC from measurement input or 24 V AC / 24–60 V DC, connection on the low-voltage side
H x W x D:	69.1 x 70 x 112.5 mm (single-phase) 69.1 x 105 x 112.5 mm (3/4 wire three-phase current)

STOCK VARIANTS

Special features	P530	Q531
Measured variable active power	▪	
Measured variable reactive power		▪

SINEAX F534

Frequency transducer for the conversion of the frequency of a system into a proportional DC signal.

CUSTOMER BENEFIT

- Determination of the progression and stability of the fundamental frequency of an electric system
- Standard as GL (Germanischer Lloyd), suitable for ships
- Output signal useable for indication, registration, monitoring and control
- Safety by galvanic isolation and shock-proof terminals (IP20)

APPLICATION

Frequency is an important command variable of electric systems or power distribution systems. Variations of the system frequency particularly occur in system overload or underload situations. They must be immediately recognised in order to take countermeasures in time. Frequency fluctuations impair the performance of connected machines disproportionately. However, this can also be utilised in drive engineering to improve start and speed characteristics e.g. in frequency converters where the frequency is employed as a control variable. The frequency is measured via a zero-phase voltage or voltage between phases which can be directly connected via a converter. The instrument is also suited to distorted voltages with dominant fundamental waves. A direct current signal proportional to the measured frequency is available at the output.

TECHNICAL DATA

Meas. input:	Input nominal voltage 10…230 V or 230…690 V
Meas. range:	45…50…55 Hz, 47…49…51 Hz, 47.5…50…52.5 Hz, 48…50…52 Hz, 58…60…62 Hz or customised between 10 and 1500 Hz
Meas. output:	Maximum output value 0…20 mA, 4…20 mA, 0…10 V or customised in the 1…20 mA or 1…10 V range Output signal unipolar, symmetrically bipolar or live-zero Setting time selectable 2, 4, 8 or 16 cycles of the input frequency
Accuracy:	Class 0.2 at 15…30 °C
Power supply:	24–60 V AC/DC or 85–230 V AC/DC (also internally from measurement input) 24 V AC / 24–60 V DC, connection on the low-voltage side
H x W x D:	69.1 x 70 x 112.5 mm, assembly on top-hat rail (35 x 15 mm or 35 x 7.5 mm)

SINEAX F535

Transducer for acquisition of the frequency difference of two systems to be synchronised.

CUSTOMER BENEFIT

- Determination of the frequency difference as a synchronisation control variable
- Standard as GL (Germanischer Lloyd), suitable for ships
- Output signal useable for indication, registration, monitoring and control
- Safety by galvanic isolation and shock-proof terminals (IP20)

APPLICATION

Voltage, phase and frequency balance are the basic preconditions to enable the parallel connection of generators on one bus bar.
The frequency difference is determined by the simultaneous measurement of the voltages of the bus bar and the generator unit to be energised.
The instrument is also suited to distorted voltages with dominant fundamental waves. A direct current signal proportional to the measured frequency difference is available at the output.

TECHNICAL DATA

Meas. input:	Input nominal voltage 10…230 V or 230…690 V
Meas. range:	f_S = 50 Hz: f_G = 49.5…50…50.5 Hz, f_G = 47.5…50…52.5 Hz, f_G = 47.5…50…52.5 Hz, f_G = 40…50…60 Hz, f_S = 60 Hz: f_G = 57.5…60…62.5 Hz or customised between 10 and 1500 Hz [f_S=frequency bus bar, f_G=frequency generator]
Meas. output:	Maximum output value 0…20 mA, 4…20 mA, 0…10 V or customised in the 1…20 mA or 1…10 V Output signal unipolar, symmetrically bipolar or live-zero Setting time selectable 2, 4, 8 or 16 cycles of the input frequency
Accuracy:	Class 0.2 at 15…30 °C
Power supply:	24–60 V AC/DC or 85–230 V AC/DC (also internally from measurement input) 24 V AC / 24–60 V DC, connection on the low-voltage side
H x W x D:	69.1 x 70 x 112.5 mm, assembly on top-hat rail (35 x 15 mm or 35 x 7.5 mm)

SINEAX G536

Transducer for acquisition of the phase angle or power factor between the current and voltage of a single-phase system or a symmetrically loaded three-phase system.

CUSTOMER BENEFIT

- Monitoring of the reactive power requirement in energy distribution systems and process engineering
- Determination of characteristic value for reactive power compensation
- Standard as GL (Germanischer Lloyd), suitable for ships
- Output signal useable for indication, registration, monitoring and control
- Safety by galvanic isolation and shock-proof terminals (IP20)

APPLICATION

The instrument serves the acquisition of losses which are caused by non-linear loads or reactive impedances. During a day, these might strongly fluctuate which impedes static reactive power compensation since overcompensation is not perwithted.
The transducer for phase angle or power factor can be connected via current and voltage transformer or directly. The instrument is also suited to distorted input variables with dominant fundamental waves. At the output, a direct current signal proportional to the measured phase angle or power factor between current and voltage is available.

TECHNICAL DATA

Meas. input:	Single-phase alternating current system or 3/4-wire three-phase system of the same load Nominal voltage 100 V, 230 V, 400 V or customised 10…690 V Nominal current 1 A, 5 A or customised 0.5…6 A Nominal frequency 50/60 Hz or 10…400 Hz
Meas. range:	Phase angle –60°…0°…+60°el or within –180°…0°…+180°el or power factor 0.5…cap…0…ind…0.5 or within –1…ind…0…cap…1…ind…0…cap…–1 Measuring span ≥20°el, unambiguous indication only up to –175°…0…+175°el
Meas. output:	Maximum output value 0…20 mA, 4…20 mA, 0…10 V or customised in the 1…20 mA or 1…10 V range Output signal unipolar, symmetrically bipolar or live-zero Setting time selectable 2, 4, 8 or 16 cycles of the input frequency
Accuracy:	Class 0.5 at 15…30 °C
Power supply:	24 – 60 V AC/DC or 85 – 230 V AC/DC (also internally from measurement input) 24 V AC / 24 – 60 V DC, connection on the low-voltage side
H x W x D:	69.1 x 70 x 112.5 mm, assembly on top-hat rail (35 x 15 mm or 35 x 7.5 mm)

SINEAX G537

Transducer for acquisition of the phase angle difference of two systems to be synchronised.

CUSTOMER BENEFIT

- Determination of the phase angle difference as a synchronisation control variable
- Standard as GL (Germanischer Lloyd), suitable for ships
- Output signal useable for indication, registration, monitoring and control
- Safety by galvanic isolation and shock-proof terminals (IP20)

APPLICATION

Voltage, phase and frequency balance are the basic preconditions to enable the parallel connection of generators on one bus bar.
The phase angle difference is determined by the simultaneous measurement of the voltage of the bus bar and the generator unit to be energised.
The instrument is also suited to distorted voltages with dominant fundamental waves. A direct current signal proportional to the measured phase angle difference is available at the output.

TECHNICAL DATA

Meas. input:	Input nominal voltage 10…230 V or 230…690 V Nominal frequency 50 Hz, 60 Hz or customised 10…400 Hz
Meas. range:	–120°…0…120°el or customised within –180°…0…180°el, in which measuring span ≥20°el, unambiguous indication only up to –175°…0…+175°el
Meas. output:	Maximum output value 0…20 mA, 4…20 mA, 0…10 V or customised in the 1…20 mA or 1…10 V range Output signal unipolar, symmetrically bipolar or live-zero Setting time selectable 2, 4, 8 or 16 cycles of the input frequency
Accuracy:	Class 0.2 at 15…30 °C
Power supply:	24–60 V AC/DC or 85–230 V AC/DC (also internally from measurement input) 24 V AC / 24–60 V DC, connection on the low-voltage side
H x W x D:	69.1 x 70 x 112.5 mm, assembly on top-hat rail (35 x 15 mm or 35 x 7.5 mm)

SIRAX BT5100, BT5200, BT5300

Measuring transducer for voltage, current or frequency.

CUSTOMER BENEFIT

- One-phase connection (voltage, current or frequency)
- 2 configurable analog outputs linear or kinked in a range from 0…20 mA / 4…20 mA or 0…10 V
- Quick on-site programming using push buttons or via CB-Configurator software
- Simple on-site device operation
- Clear and well readable representation of measured data via LCD display
- Flexible communication and remote readout via integrated Modbus RTU interface
- DIN rail for top-hat rail mounting
- Measurment uncertainty 0.2 %

STOCK VARIATIONS

Article No.	Description	Measuring input
175 267	SIRAX BT5100	Voltage
175 283	SIRAX BT5200	Current
175 308	SIRAX BT5300	Frequency

SIRAX BT5400

Measuring transducer for power.

CUSTOMER BENEFIT

- Connection type: One-phase, 3-phase 3-wire balanced or unbalanced load or 3-phase 4-wire balanced or unbalanced load
- Measuring input for power
- Nominal voltage up to 500 V, nominal current 1 / 5 A
- 2 configurable analog outputs linear or kinked in a unipolar range of
- 0…20 mA / 4…20 mA or 0…10 V or a bipolar range of -20…0…+20 mA or -10…0…+10 V
- Quick on-site programming using push buttons or via CB-Configurator software
- Simple on-site device operation
- Clear and well readable representation of measured data via LCD display
- Flexible communication and remote readout via integrated Modbus RTU interface
- Measurment uncertainty 0.2 %, Measurement uncertainty phase angle, power factor 0.5 %

STOCK VARIATIONS

Article No.	Description	Measuring input
175 316	SIRAX BT5400	Power

MULTIFUNCTIONAL INSTRUMENTS FOR TOP-HAT RAIL

Introduction
Conventional transducers for heavy current variables are an excellent aid to acquire individual electric variables in energy distribution, automation or process engineering and to process them in accordance with requirements. However, if several variables are to be acquired, microcontroller-based multifunctional instruments constitute the more effective and more cost-effective solution:

Less assembly and wiring expenditure
- Less copper
- Less installation time
- Reduced susceptibility to failures

Flexibility
- Several measured variables per instrument
- Lower planning costs due to fewer components
- Adaptable to application by software
- Analysis and monitoring options
- No fixed measuring ranges
- Hardly any hardware variants
- Reduced stocks

Risk
- All of the information is lost in an instrument failure

Operating principle of sampling system
1. Measurement of the fundamental frequency of the system. Simpler instruments presuppose a constant system frequency which can lead to larger errors.
2. Sampling of the input variables of voltage and current of all phases based on the measured fundamental frequency. Quality criteria are the number of samplings per system cycle and the reproducible resolution of the measuring system. The correct timing of the sampling process is also very important so that unbalances and phase shiftings can be properly analysed.
3. Calculation of the required measured variables, based on the sampling values.
4. Measured values are made available to the process. They may be analog values for a PLC or an analog indicator, states of a liwith value monitoring system or digital measured values via a bus interface.
5. More extensive analyses. The possibilities are liwithed by the capacity of the uC system used. Camille Bauer makes available systems with different capacities.

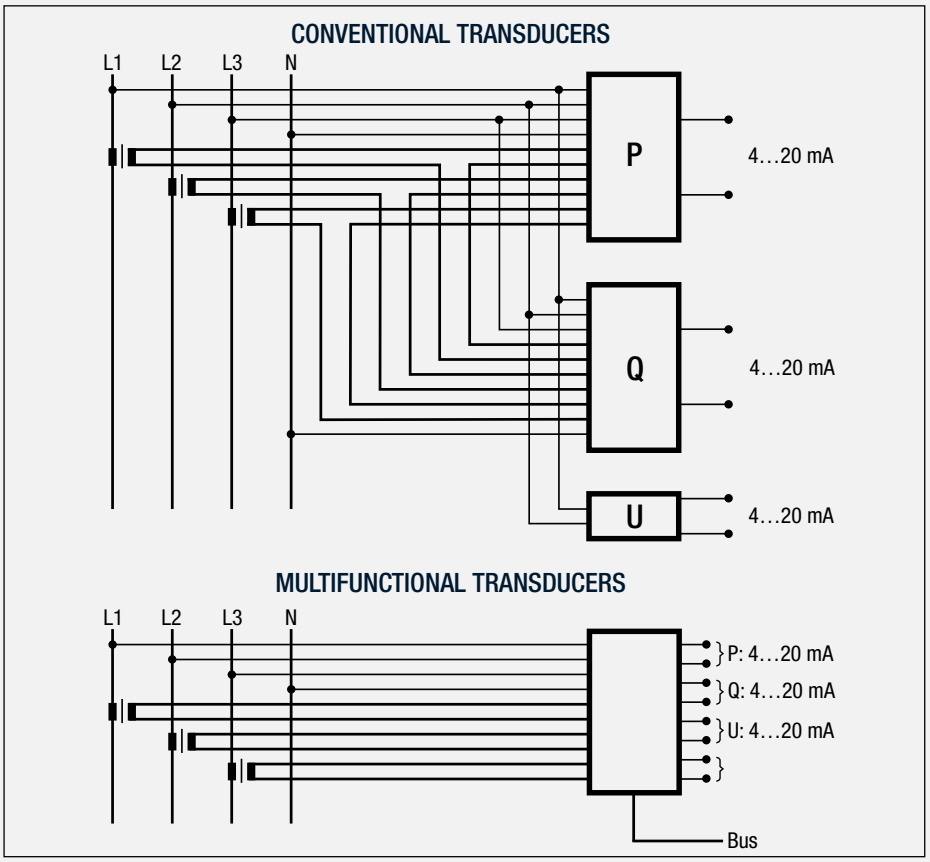

Application
The table on page 18 helps in the selection of the instrument series. This is an overview, details concerning individual instrument variants are contained in subsequent pages.
Multifunctional transducers can be connected via current and voltage transformers or directly. All Camille Bauer series can be used universally. The application (system configuration) as well as nominal values of current and voltage are freely programmable without any hardware variants. The allocation of measured variables to the outputs and the determination of the liwiths of the measuring ranges is also realised using the respective PC software which is made available free of charge by us. Service functions support users during commissioning. In this way, e.g. values of analog or digital outputs can be simulated to test subsequent circuits without the measurement input having to be connected or activated.
Instrument variants with a bus connection provide all acquired measured values via the corresponding digital interface. The respective documentation is attached to the instrument or can be downloaded from our homepage http://www.camillebauer.com

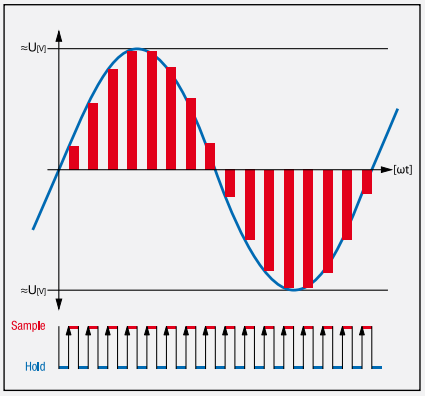

Accessories
For configuration software see Page 76

	SINEAX DM5S	APLUS	SINEAX CAM
		further details on page 31	
Measurement interval	4…1024 / 0.5...8 cycles	2…1024 cycles	1…1024 cycles
Uninterrupted measurement	▪	▪	▪
Measurement input voltage (max.) L-L	692 (832) V	692 (832) V	692 (1000) V
Measurement input current (max.)	1…5A (7.5 A)	1…5A (7.5 A)	1...5 A (10A)
Frequency range	45-50/60-65 Hz	45-50/60-65 Hz	10-70 Hz, 45-65 Hz, 10-140 Hz with rated frequency 50/60 Hz
Power supply AC/DC	24…230 V DC, 100…230 V AC	24…230V DC,100…230V AC	100…230 V AC/DC or 24…60 V DC
MEASUREMENT UNCERTAINTY			
On bus interface U / I; P / Q / S	±0.12 %; ±0.2 %	±0.1 %; ±0.2 %	±0.1 %; ±0.2 %
Additional uncertainty analog outputs	–	±0.2 %	±0.1 %
Active / reactive energy (IEC 62053)	Class 0.5S / 2	Class 0.5S / 2	Class 1.0 / 2
MEASURED VARIABLES			
Basic quantities of the system [1]	▪	▪	▪
Mean-values	–	1s…60 min	1s…60 min
Min/Max values with time reference	–	▪	▪
Harmonic analysis U / I	–	2. up to 50.	2. up to 50.
Extended reactive power analysis	–	▪	–
Phase angle of voltages	(▪)	▪	–
System imbalance	–	U+I (3L+4L)	U+I (3L+4L)
Energy meters P/Q	32, up to 16 tariffs (only DM5S)	12 (high-/low tariff)	6 (high-/low tariff)
Universal meters via I/O's	–	▪ (max. 7)	▪ (max. 12)
Operating hour counters	–	3+1	1
MONITORING FUNCTIONS			
Liwith values	–	up to 16	up to 64
Boolean logic (Logic module)	–	4 functions	32 functions
RECORDING FUNCTIONS		(optional)	(optional)
Load profiles (mean-values)	–	▪	▪
Min/Max values per averaging interval	–	▪	▪
Events / alarms	–	▪	▪
Disturbance recording (RMS values)	–	(≥2-cycle values)	–
Meter reading (calendar based)	–	▪	▪
INTERFACES			
USB	standard	–	standard
RS485, Modbus/RTU	▪ (optional)	▪ (optional)	standard
Ethernet, Modbus/TCP	–	▪ (optional)	▪ (optional)
Ethernet, IEC61850	–	–	▪ (optional)
Profibus DP + Modbus/RTU	–	▪ (optional)	–
INPUTS / OUTPUTS			
Digital inputs	–	1, 5, 7	0, 3, 6, 9, 12
Digital outputs	–	1, 5, 7	0, 3, 6, 9, 12
Analog inputs	–	–	0, 2, 4, 6, 8
Analog outputs	0...4	0, 4	0, 2, 4, 6, 8
Relays	–	1, 3	2

[1] The basic quantities of the system are all phase and system quantities of voltage, current, bimetal current, active, reactive and apparent power, active and reactive load factor as well as frequency.

SINEAX DM5000

Compact instruments for monitoring all aspects of power distribution

The SINEAX DM5000 is a compact instrument to measure and monitor in heavy current grids. It provides a wide range of functionalities which may even be extended by optional components. The connection of the process environment may be performed by communication interfaces, via digital I/Os, analog outputs or relays. The optional display excels in display quality and intuitive on-site operation. The device has been designed for universal use in industrial plants, building automation or in energy distribution.
Nominal voltages of up to 690 V and measurement category CATIII can be directly connected in low voltage systems. The universal measuring system permits the direct use of the devices in any type of grid, from single-phase mains through to 4-wire unbalanced load systems.
The device may be completely adapted to the requirements on site either via web server or the optional TFT display. A special software is neither needed for configuration nor for data visualization.

MEASURED VALUE GROUP	APPLICATION
INSTANTANEOUS VALUES	
U, I, IMS, P, Q, S, PF, LF, QF ...	Transparent monitoring of present system state
Angle between voltage phasors	Fault detection, connection check, sense of rotation check
Min/max of instantaneous values with time stamp	Determination of grid variable variance with time reference
EXTENDED REACTIVE POWER ANALYSIS	
Total reactive power, fundamental frequency, harmonics	Reactive power compensation
cosϕ, tanϕ of fundamental frequency with min values in all quadrants	Verification of specified power factor
HARMONICS ANALYSIS (ACCORDING TO EN 61 000-4-7)	
Total harmonics content THD U/I and TDD I	Evaluation of the thermic load of equipment
Individual harmonics U/I up to 50th	Analysis of system perturbation and consumer structure
IMBALANCE ANALYSIS	
Symmetrical components (positive, negative, zero sequence system)	Equipment overload protection
Imbalance (from symmetrical components)	Fault/earth contact detection
Deviation from U/I mean value	
ENERGY BALANCE ANALYSIS	
Meters for the demand/supply of active/reactive power, high/low tariff, meters with selectable fundamental variable	Preparation of (internal) energy billing
Power mean values active/reactive power, demand and supply, freely definable mean values (e.g. phase power, voltage, current and much more).	Determination of energy consumption versus time (load profile) for energy management or energy efficiency verification
Mean value trends	Energy consumption trend analysis for load management
OPERATING HOURS	
3 operating hour counters with programmable running condition	Monitoring of service and maintenance intervals of equipments
Operating hours of the device	

OPERATION AND ANALYSIS

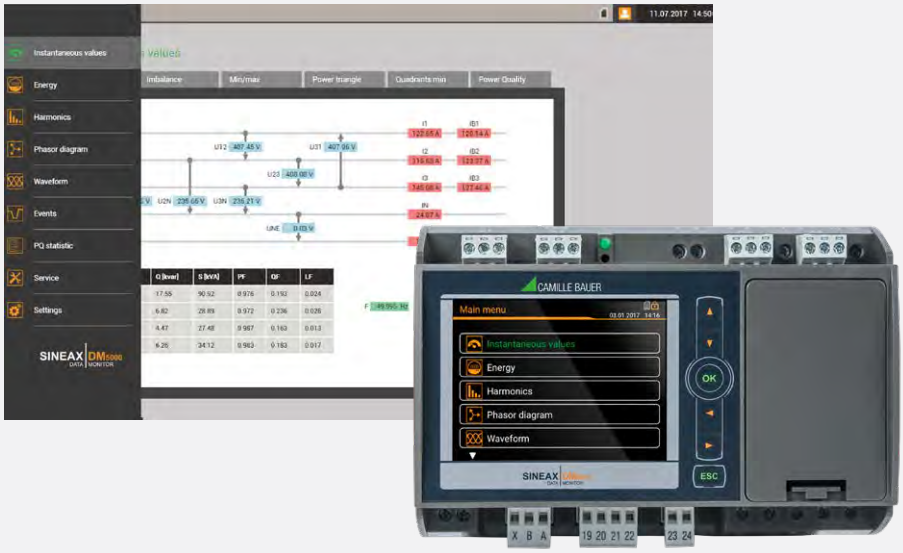

OPERATION

The local operation at the device itself and the access via web interface are structured identically. One can access the available measured data, parametrise the instrument or use the service functions via the language-specific, topically structured menu navigation. The status bar at the top right, uniformly shows the statuses of alarm monitoring, the password protection system, the data recording and the UPS as well as time and date.

All data are available via both the local GUI and the WEB interface of the device.

DATA RECORDING

The devices may be equipped with a high-performance data logger which has the following recording options in its comprehensive version:

- **PERIODIC DATA**
  Selectable measured values are saved in regular intervals, e.g. to acquire load profiles (intervals of 10s to 1h) or periodic meter readings (e.g. daily, weekly, monthly).

- **EVENTS**
  A type of logbook which records the occurrence of events together with time information: Triggering and declining of monitoring functions, changes in configuration, power cuts and much more.

- **DISTURBANCE RECORDER**
  Recording of current and voltage progression in case of disturbances on basis of 1/2 cycle RMS values. The additional registration of the waveform during the disturbance is also possible. This type of registration corresponds to the requirements of the EN 61000-4-30 power quality standard.

The event list and the recordings of the disturbance recorder may be visualised right on the device. More extensive analyses are available via the web page of the device.

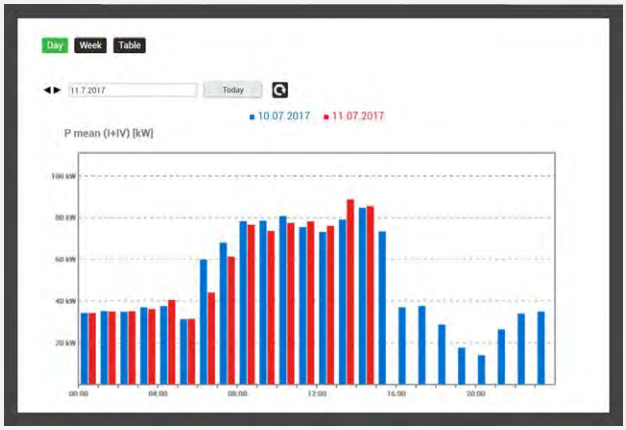

SINEAX DM5S/DM5F

For the simultaneous acquisition of multiple quantities of any heavy current system.

TECHNICAL DATA

Measurement input:	57.7 …400 V (Ph-N) resp. 100…693 V (Ph-Ph), 1…5A, 50 or 60 Hz
Systems:	Single-phase, 3/4-wire balanced / unbalanced load or 3-wire balanced load phase shift (2 voltages, 1 current)
Measuring time:	4...1024 cycles (DM5S), 0.5...8 cycles (DM5F)
Measurement output:	Up to 4 analog outputs ±20 mA, response time 165 ms (for measurement interval 4 cycles, 50 Hz)
Uncertainty:	Voltage, current: ±0.12 %; Power: ±0.2 %; Load factor: ±0.1 °; Frequency: ±0.01 Hz; Active energy: Class 0.5S (EN 62 053-22); Reactive energy: Class 2 (EN 62 053-23)
Power supply:	100…230 V AC ±15%, 50…400 Hz resp. 24...230 V DC ±15 %
Dimensions:	(H x W x D): 110 x 70 x 70 mm, assembly on top-hat rail (35 x 15 mm or 35 x 7.5 mm)

APPLICATION

The SINEAX DM5S and SINEAX DM5F are free-programmable universal measurement devices for heavy-current systems: A classical high-accuracy transducer, suited for monitoring tasks and retrofit applications in energy distribution and industry. The device can be adapted fast and easily to the measurement task by means of the CB-Manager software – even if there is no auxiliary power available. Depending on the device version measured quantities can be mapped proportional to analog DC current outputs or to Modbus.

The measurement is done uninterrupted in all four quadrants and can be adapted optimally to the system to be monitored. Both the average time of the measurement and the expected maximum signal level can be configured.
The device determines in regular intervals the instantaneous values of voltages, currents, bimetal currents, power quantities, load factors as well as frequency and provide them to analog outputs and Modbus interface.

The DM5S supports up to 32 energy meters. To each of these meters a base measurement quantity and one of up to 16 tariffs can be assigned. The present tariff is set via Modbus. For applications with short measurement times, e.g. energy consumption for a single working day or production lot, the resolution can be adapted.
Commissioning is supported by the CB-Manager service functions data label printing, connection check, measurement recording as well as simulation und trimming of analog outputs.

DM5X-

APPLICATION
- Universal version (for all system types)
- Balanced systems
- Single-phase systems and 4-wire balanced

ANALOG OUTPUTS
- Without
- 1,2,3 or 4 galvanically isolated ±20mA

MODBUS-INTERFACE (Modbus/RTU-protocol)
- Without
- With

ACCESSORIES

Article No.	Description
163 189	Interface converter USB <> RS485 (Modbus)
172 081	USB cable type A to type B, 1.8m, for programming the DM5S (not in scope of supply)
156 027	Doku-CD with configuration software CB-Manager (not in scope of supply)
172 388	Label sheets A6 for printing configuration labels (50 pcs.)

SINEAX CAM

For the comprehensive analysis of any heavy current system.

CUSTOMER BENEFIT

- Consistent measurement (without interruption)
- Suited to strongly distorted systems, zero crossing or phase-angle controls
- I/O interface adaptable to individual requirements
- Configuration and measured value acquisition via USB and Modbus interface
- Acquisition of minimum and maximum values with time stamp
- System analysis (harmonics and unbalance)
- Synchronisable real-time clock as a time basis and operating hour counter
- Graphic display with freely arranged measured value display and alarm handling (option)
- Logger for long-term recording of measured value progressions (option)
- Protocol lists for events, alarms and system messages (option)

APPLICATION

SINEAX CAM is designed for measurement in electrical distribution systems or industrial plants. Apart from the current system state, the pollution by non-linear loads as well as the overall load of the power system can be determined. Consistent measurement guarantees that any system change is reliably acquired and included in the measured data. The high-performance measuring system makes the device also suitable for strongly distorted systems, zero crossing or phase-angle controls.

The I/O interface may be arranged as required. Up to 4 modules with different functionality may be used. The logger perwiths long-term recordings of measured value progressions, e.g. to monitor the variable load of transformers or to facilitate automatic meter readings. Lists record definable events, alarms and system messages chronologically for a subsequent analysis of incidents in the power system.

TECHNICAL DATA

Meas. input:	Nominal voltage up to 693 V (Ph-Ph), nominal current up to 5 A, overridings programmable, nominal frequency 45…65 Hz, 10…70 Hz or 10…140 Hz The device is also available with current inputs for Rogowski coils
System configuration:	Single-phase alternating current, split phase, 3/4-wire three-phase current with balanced/unbalanced load, clockwise and anti-clockwise rotating systems
Energy meter:	Active energy incoming + outgoing, reactive energy incoming + outgoing + inductive + capacitive for measured system as well as max. 12 meters for external variables via digital or analog inputs. All meters high and low tariff if tariff switching is activated
Accuracy:	Voltage and current 0.1%, power and voltage unbalance 0.2% Harmonics, THD and TDD 0.5%, power factor ±0.1°, frequency ±0.01 Hz Active energy Class 1 (EN 62 053-21), reactive energy Class 2 (EN 62 053-23) Analog inputs/outputs ±0.1%
Dimensions:	90 x 186 x 63 mm, assembly on top-hat rail (35 x 15 mm or 35 x 7.5 mm)

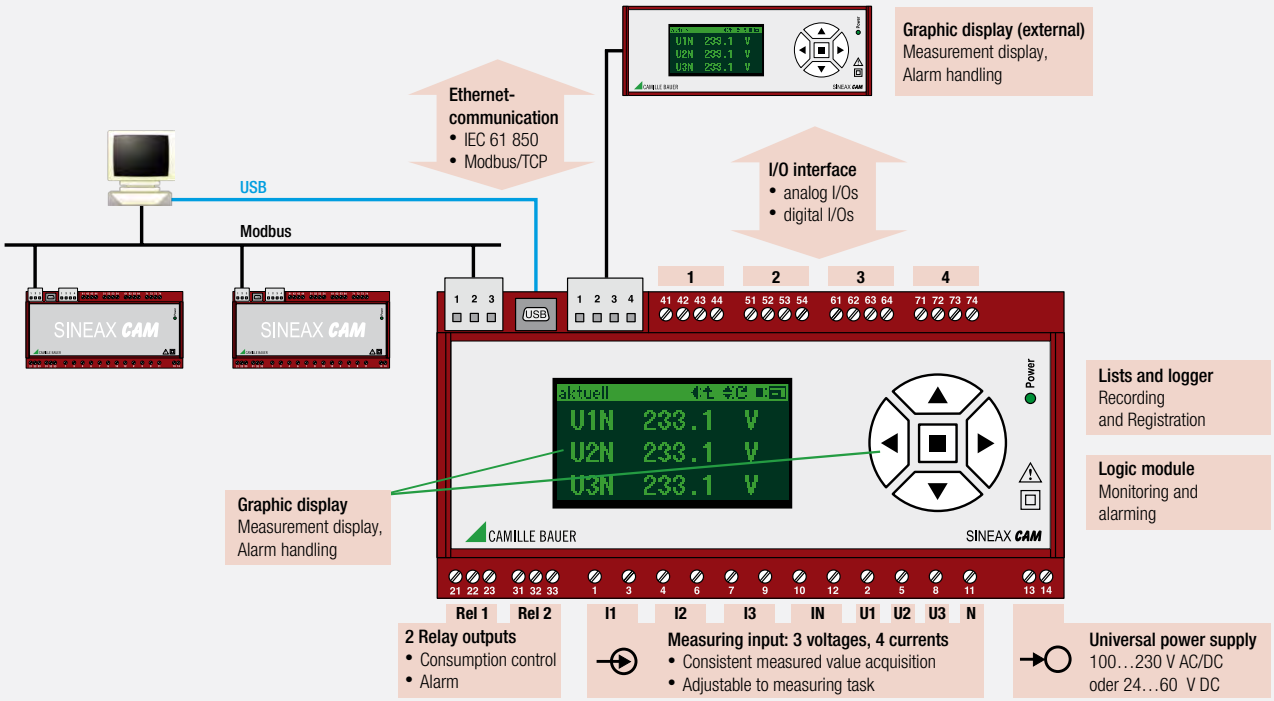

The optional 7-language graphic display (internal, external or both) is provided to visualise measured data and list entries on site. Users can adapt the display of measured data almost freely to their requirements. If required, a preferred display or an automatic sequence of measured values may be defined. The selection of the measured value display, resetting of meters or extreme values but also the acknowledgement of alarm may be arranged via the keypad. The authorisation to execute such functions can be liwithed via a safety system integrated in the device. If the system has been activated, the user must first log in via the display.

FLEXIBLE I/O-INTERFACE

I/O modules can be assembled according to individual needs. Up to 5 modules with selectable functionality may be used. Six different hardware modules are available.

Analog outputs ±20 mA or 0/4…20 mA, 2 outputs per module
- On-site display via analog display units
- Heavy-current measurements for PLC

Analog inputs 0/4…20 mA, 2 inputs per module
- Acquisition of ext. quantities, e.g. temperature
- Automatic metering of input quantity
- Scalable, e.g. 4…20 mA to 0…100 °C, displayable on graphic display and requestable via interface

Digital outputs S0, 12/24 VDC, 3 outputs per module (switchable to inputs)
- Alarming output of the logic module
- State reporting
- Pulse output (S0) to external counter

Digital inputs, 3 inputs per module: 12/24 VDC (switchable to outputs)
Digital inputs, 3 inputs per module: 48/125 VDC (only in position 4)
- Acquisition of external state information
- Trigger or release signal for logic module
- Pulse input for metering

Analog output module

Ethernet-communication (option)

To be able to analyze the huge amount of measured data in real-time, a transmission medium with high bandwidth is necessary. Ethernet provides this high performance.

Option 1: Ethernet, Modbus/TCP-Protocol

Modbus/TCP is a commonly used protocol for an easy access to configuration or measurement data. It is supported by a large number of visualization software tools and thus allows a fast implementation of the device. NTP (Network Time Protocol) is supported for time synchronisation via Ethernet.

Option 2: Ethernet, IEC 61 850-Protocol

The communication standard IEC 61 850 is the new standard for substation automation. Each possible device or system function is standardized and mapped in so called logical nodes (LN's). CAM provides the following logical nodes:

MMXU / MMXN: Instantaneous values of voltages, currents, frequency, powers and load factors as well as their maximum and minimum values. MMXU is used for asymmetrical 3 and 4 wire systems, MMXN for single phase and balanced load 3 and 4 wire systems.

MHAI / MHAN: Individual harmonics for voltages and currents, THD (total harmonic distortion) and TDD (total demand distortion) and their maximum values. MHAI is used for asymmetrical 3 and 4 wire systems, MHAN for single phase and balanced load 3 and 4 wire systems.

MMTR: Active and reactive energy meters for incoming and outgoing power. One instance for both high and low tariff.

MSTA: Mean values of voltage, current, active, reactive and apparent power as well as their maximum and minimum values on instantaneous values base. All measured within the same interval. These values are provided for each phase as well.

MSQI: Imbalance of voltages and currents, calculated in accordance with two different methods.

GGIO: Maps the information of assembled analog and digital input modules. For each input an instance of GGIO processes state information, a measured quantity or metering pulses from an external device.

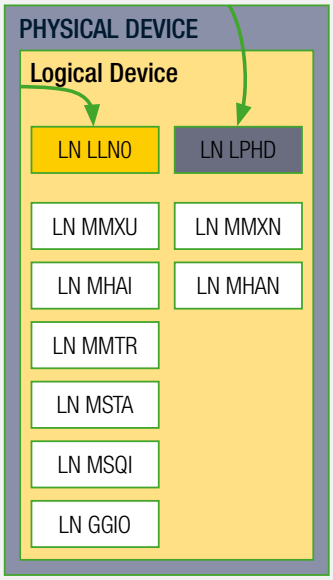

Data logger: Long-term recordings (option)

The data logger allows to perform long-term recordings of measurement progressions or load profiles, e.g. to monitor the variable load of transformers, feeders or transmission lines. In addition to the recording of mean-values, fluctuations of instantaneous values may be registered to recognize load peaks at the earliest possible moment.

By means of the automatical meter reading a time synchronous reading of the meter contents of all devices may be performed, e.g. on a weekly, monthly or three months base. These values can be stored for any desired time, thus allow determining the energy consumption per time for billing purposes.

Lists: Logging of alarm and events (option)

Lists allow a chronological recording of events, alarms and system messages. Each change of the system state and each access to the device can thus be reproduced and analyzed at a later time in a correct sequence. Each entry in the lists is time stamped.

Logic modul (standard):

The module consists of up to 32 logic functions with 3 digital input states each. Liwith values of measured variables, states of digital inputs, state defaults via bus interface or results of other logic functions can be used as input variables. Typical applications are liwith value monitoring of individual variables (e.g. overcurrent of a phase) or of combinations (e.g. phase failure). External functions can also be monitored via the I/O interface. The results of the logic functions will then trigger actions. This may be an alarm via digital outputs or relays but also an entry in an alarm or event list or the indication of an alarm text on the graphic display.

Standard interfaces (for configuration, service, measured value polling)

- Modbus/RTU connection, max. 32 participants (incl. master), baud raten up to 115.2 kBd
- USB connection (USB mini-B, 5-pole), protocol USB 2.0

Mobile demand analysis in any low-voltage system with data recording

The CAMmobile bases on the SINEAX CAM with Rogowski current inputs. It is designed for the mobile analysis in low-voltage power systems.

- Analysis of the present system state for monitoring and maintenance purpose
- Detection of disturbances, such as voltage variations or dips
- Load analysis of power distribution systems, generators and transformers
- Identification of billing relevant quantities, such as load curves and peak loads
- Acquisition of the total consumption of active and reactive energy in all 4 quadrants

Part of the scope of delivery

Doku-CD with CB-Manager and CB-Analyzer, see page 75

ACCESSORIES

Article No.	Description
157 968	Graphic display EDS-CAM, for external control panel assembly
168 949	Connecting cable 2m EDS-CAM <> CAM, other lengths upon request
163 189	Interface converter USB <> RS485 (Modbus)

EDS-CAM

CAMmobile

SINEAX DME4, A200, M56X

To acquire several variables of any heavy current system simultaneously.

CUSTOMER BENEFIT

- Only one measuring unit for several heavy current variables, Class 0.2
- PC software with password protection for configuration and commissioning
- Output signal(s) useable for display, registration, metering and monitoring
- Safety through galvanic isolation of all circuits and shock-proof terminals

TECHNICAL DATA

Meas. input:	Nominal voltage 57.7…400 V (Ph-N) or 100…693 V (Ph-Ph), nominal current 1…6 A, nominal frequency 50 or 60Hz
System configuration:	Single-phase alternating current, 3/4-wire three-phase current with balanced/unbalanced load or 3-wire three-phase current with balanced load in reduced phase-shift connection (2 voltages, 1 current)
Measurement output:	Depending on instrument type, measuring cycle time 0.13…0.99 s (DME4) or 0.6…1.6s (M56x), depending on instrument type and programming
Accuracy:	State variables via bus interface: Class 0.25 (DME4), class 0.5 (M56x) Only DME4: Active power meters: Class 1, reactive power meters: Class 2
Power supply:	24–60 V AC/DC or 85–230 V AC/DC or AC supply 230 V AC (only DME4), also internally from measuring input
H x W x D:	DME4: 69.1 x 105 x 112.5 mm; M56x: 69.1 x 105 x 112.5mm top-hat rail assembly (35 x 15 mm or 35 x 7.5 mm)

OVERVIEW OF INSTRUMENTS

Type	DME 442	DME 424	M561	M562	M563
Input	100…693V (Ph-Ph), 1…6 A				
Accuracy	0.25 %		0.5 %		
Analog outputs	4 (bipolar)	2 (bipolar)	1 (bipolar)	2 (bipolar)	3 (bipolar)
Digital outputs	2	4	-	-	-
Meters	up to 2	up to 4	-	-	-

APPLICATION

The instruments of the programmable DME4 and M56x transducer series are designed for measurement in electric distribution systems or industrial plants. They are used where a high degree of accuracy and flexibility is demanded.
The measuring system of the transducers has been designed for the acquisition of sinusoidal alternating current signals with low harmonic content. Harmonic content up to the 15th harmonic (DME4) resp. up to the 11th harmonic (M563) are taken into account. These instruments are suited in a liwithed fashion for applications after phase-angle controls or after frequency converters. For very distorted signals the use of DM5, A*PLUS*, AMx000 or SINEAX CAM is recommended.

VALUE DISPLAY

For a comprehensive measured value display on site, the SINEAX A200 display unit can be connected to the serial RS232 interface of the converter in all instrument types of the DME4 line. In this way, all instantaneous or meter values can be displayed. The display unit is also available as a mobile version A200-HH.

ACCESSORIES

Configuration software DME4, see page 76
Configuration software M560, see page 76
RS232 programming cable for DME4, see page 73
PRKAB560 programming cable for M56x, see page 73
Connecting cable D-Sub 9 pol male/male, Article No. 154 071 (in A200-HH included in the scope of delivery)
Top-hat rail adapter for SINEAX A200, Article No. 154 055

MULTIFUNCTIONAL INSTRUMENTS DISPLAY / PANEL

	AM1000	AM2000	AM3000
Input channels voltage / current	3 / 3	3 / 3	4 / 4
Measuring interval [#cycles]	10/12 (50/60 Hz); 1/2	10/12 (50/60 Hz)	10/12 (50/60 Hz); 1/2
MEASURED VALUES			
Instantaneous values	▪	▪	▪
Extended reactive power analysis	▪	▪	▪
Imbalance analysis	▪	▪	▪
Neutral current	calculated	calculated	measured / calculated
Earth wire current (calculated)			▪
Zero displacement UNE	calculated	calculated	measured / calculated
Energy balance analysis	▪	▪	▪
Harmonic analysis	▪	▪	▪ (incl. phase angle)
Operating hour counters device / general	1 / 3	1 / –	1 / 3
Monitoring functions	▪	▪	▪
Visualisation curve shape U/I	▪	–	▪
MEASUREMENT UNCERTAINTY			
Voltage, current	±0.2 %	±0.2 %	±0.1%
Active, reactive, apparent power	±0.5 %	±0.5 %	±0.2%
Frequency	±10 mHz	±10 mHz	±10 mHz
Active energy (IEC 62053-21/22)	Class 1	Class 1	Class 0,5 S
Reactive energy (IEC 62053-24)	Class 1	Class 1	Class 0,5 S
DATA LOGGER (option, only with Ethernet)	internal (≥2 GB)	Mikro SD card (≥2 GB)	Mikro SD card (≥2 GB)
Periodic recordings	▪	▪	▪
Event recordings	▪	▪	▪
Dusturbance recorder (with pretrigger)			
a) 1/2 cycle RMS progression U/I	≤3 min.	–	≤3 min.
b) Curve shape U/I [#cycles]	5/6 (pretrigger) +10/12	–	5/6 (pretrigger) +10/12
COMMUNICATION			
Ethernet: Modbus/TCP, web server, NTP	option	option	standard
RS485: Modbus/RTU	option	standard	option
Standard I/Os	1 Dig. OUT ; 1 Dig. IN/OUT	1 Dig. IN ; 2 Dig. OUT	1 Dig. IN ; 2 Dig. OUT
I/O extension modules (optional)	max. 1 module	max. 4 modules	max. 4 modules
POWER SUPPLY	100-230 V AC/DC 24-48 V DC	110-230V AC/130-230 V DC 110-200 V AC/DC 24-48 V DC	110-230 V AC/130-230 V DC 110-200 V AC/DC 24-48 V DC
DESIGN			
Colour display	TFT 3.5“ (320x240 px)	TFT 5.0“ (800x480 px)	TFT 5.0“ (800x480 px)
Front dimensions	96 x 96 mm	144 x 144 mm	144 x 144 mm
Mounting depth	85 mm	65.2 mm	65.2 mm

The displaying power meters for heavy current variables are completely programmable, universal measuring units. They provide numerous measured values and perwith the complete acquisition of the state of a heavy current system. As is the case in multi-transducers, a sampling measuring principle is used (see overview of multifunctional transducers). The two tables shown below are a selection guide for the right instrument.

	APLUS	A210 / A220	A230s / A230
	„All in one“	display unit + optional extension module	display unit + optional extension module
Measuring system			
Voltage, current	±0.1 %	±0.5 %	±0.2 %
Apparent, active, reactive power	±0.2 %	±1 %	±0.5 %
Active / reactive energy (IEC 62 053)	Class 0.5S / 2	–	–
Measuring interval	2…1024 cycles	200 ms	200 ms
Uninterrupted measurement	▪	–	–
Nominal voltage (max.) L-L	690 (832) V	500 (600) V	500 (600) V
Nominal current (max.)	1 and 5 A (7.5 A)	1 or 5 A (6 A)	1 or 5 A (6 A)
MEASURED VARIABLES			
Basic variables of the system [1]	▪	▪	▪
Mean values	1 s…60 min	1…60 min	1…60 min
Min/max values with time reference	▪	with EMMOD203	with EMMOD203
Harmonic analysis	2. up to 50.	–	2. up to 15.
Extended reactive power analysis	▪	–	–
Voltage phase angle	▪	–	–
System imbalance	U + I (3L+4L)	–	U (4L)
Energy meters P/Q (HT/NT)	system, phase (incoming)	system	system
Universal meters via I/O's	▪ (max. 7)	–	–
Operating hour counters	3+1	–	–
MONITORING FUNCTIONS			
Liwith values	up to 16	2	2
Boolean logic (logic module)	4 Funktionen	–	–
RECORDING FUNCTIONS	(optional)	with EMMOD…	with EMMOD…
Load profile (mean values)	▪	201/203	201/203
Min/max values per interval	▪	–	203
Events / alarms	▪	–	–
Disturbance recording (RMS)	▪ (≥ 2 cycle values)	–	–
Autom. meter readings	▪	–	–
INTERFACES	–	with EMMOD…	with EMMOD…
Ethernet	(optional)	203	203
Profibus DP	–	204	204
Modbus	2.4…115.2 kBd	1.2…19.2 kBd	1.2…19.2 kBd
LON	–	205	205
M-Bus	–	206	206
INPUTS / OUTPUTS	–	with EMMOD…	with EMMOD…
Digital inputs	1…7	0, 1, 2	0, 1, 2
Digital outputs	1…7	2	2
Analog outputs	0, 4	0, 2	0, 2
Relays	1, 3	–	–
DISPLAY			
User-definable display	▪	–	▪
Liwith values status display	4 LED's + plain text	–	–
Front W x H [mm]	96 x 96 mm	96 x 96 mm / 144 x 144 mm	96 x 96 mm / 144 x 144 mm
Installation depth (with module)	105 mm	46 (65) mm	46 (65) mm

[1] All phase and system variables of voltage, current, active, reactive and apparent power, power factor as well as frequency.

SINEAX AM1000, AM2000, AM3000

To aquire several variables of any heavy current system simultaneously.

SINEAX AM1000

SINEAX AM3000

The SINEAX AM-series devices are compact instruments to measure and monitor in heavy current grids. They excel in display quality and intuitive operation. The devices provide a wide range of functionalities which may even be extended by optional components. They are connected to the process environment by communication interfaces, via digital I/Os, analog outputs or relays.
The devices have been designed for universal use in industrial plants, building automation or in energy distribution.
Nominal voltages of up to 690 V and measurement category CATIII can be directly connected in low voltage systems.
The universal measuring system perwiths the direct use of the devices in any type of grid, from single-phase mains through to 4-wire unbalanced load systems.
The AM series devices may be completely adapted to requirements on site via TFT display. Versions with an Ethernet interface perwith webpage configuration without any special software.

MEASURED VALUE GROUP	APPLICATION
INSTANTANEOUS VALUES	
U, I, IMS, P, Q, S, PF, LF, QF ...	Transparent monitoring of present system state
Angle between voltage phasors	Fault detection, connection check, sense of rotation check
Min/max of instantaneous values with time stamp	Determination of grid variable variance with time reference
EXTENDED REACTIVE POWER ANALYSIS	
Total reactive power, fundamental frequency, harmonics	Reactive power compensation
cosϕ, tanϕ of fundamental frequency with min values in all quadrants	Verification of specified power factor
HARMONICS ANALYSIS (ACCORDING TO EN 61 000-4-7)	
Total harmonics content THD U/I and TDD I	Evaluation of the thermic load of equipment
Individual harmonics U/I up to 50th	Analysis of system perturbation and consumer structure
IMBALANCE ANALYSIS	
Symmetrical components (positive, negative, zero sequence system)	Equipment overload protection
Imbalance (from symmetrical components)	Fault/earth contact detection
Deviation from U/I mean value	
ENERGY BALANCE ANALYSIS	
Meters for the demand/supply of active/reactive power, high/low tariff, meters with selectable fundamental variable	Preparation of (internal) energy billing
Power mean values active/reactive power, demand and supply, freely definable mean values (e.g. phase power, voltage, current and much more)	Determination of energy consumption versus time (load profile) for energy management or energy efficiency verification
Mean value trends	Energy consumption trend analysis for load management
OPERATING HOURS	
3 operating hour counters with programmable running condition (only AM1000/AM3000)	Monitoring of service and maintenance intervals of equipments
Operating hours of the device	

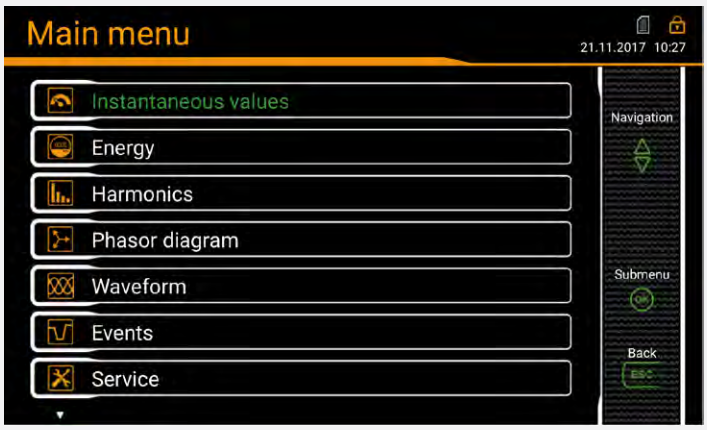

MAIN MENU - accessible via ESC
The language-specific main menu arranges the available measured data in easily comprehensible groups. AM2000 and AM3000 also provide the lateral help bar with further information concerning operation.
The status bar in the top right-hand corner is always available and displays the current statuses of alarm monitoring, the password protection system and data recording as well as time / date.

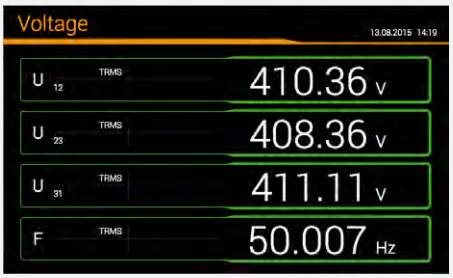

INSTANTANEOUS VALUES
The instantaneous values of voltages, currents, power values, power factors as well as imbalance values and their min/max values are provided either in numbers or graphically in an x/y matrix.

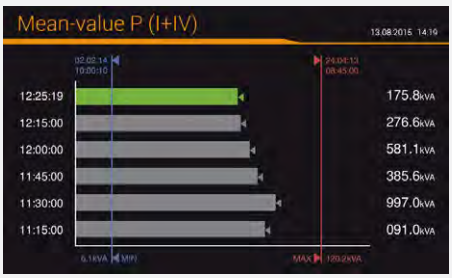

ENERGY
Contains all values required for the preparation of the energy balance, in particular, energy meters as well a mean values with progression and trend.

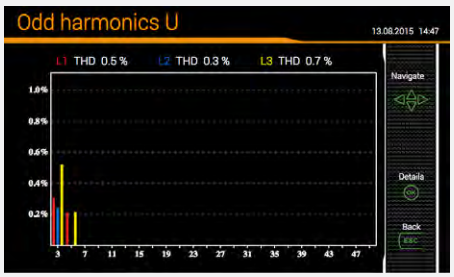

HARMONICS
Graphic representation of harmonics of all currents and voltages with TDD/THD. Reading option for individual harmonics.

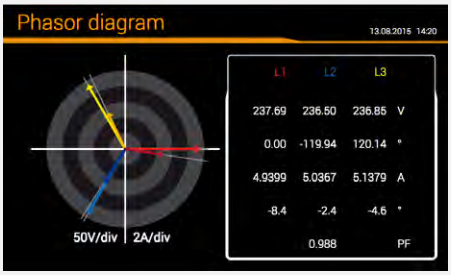

PHASOR DIAGRAM
Time-correct display of voltage and current phasors and power factors of all phases. Incorrect phase sequences false senses of rotation or reverse currents can thus be safely recognised.

ALARMS
This list displays the statuses of all monitoring functions, possibly including the status of the allocated output. The first entry is the higher-ranking collective alarm which can be reset here.

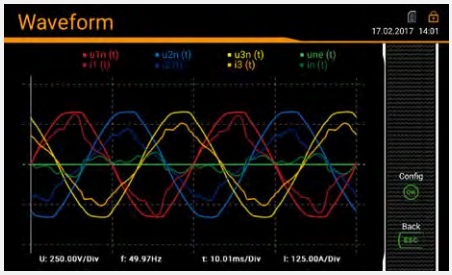

WAVEFORM
AM1000 and AM3000 displays the waveform of voltages and currents in additionally.

DEMAND / SUPPLY / INDUCTIVE / CAPACITIVE

The devices of the SINEAX AM-SERIES provide information for all of the four quadrants. Depending on whether the measured system is considered from a generator or consumer perspective, the interpretation of the quadrants changes: The energy formed from active power in Quadrants I+IV can then be regarded, e.g., as supplied or demanded active energy.
In order to facilitate an independent interpretation of the 4-quadrant information, the terms demand, supply as well as inductive or capacitive load are avoided in the display of data. They are expressed by stating Quadrant I, II, III or IV or a combination of these.
In AM3000, the energy direction may be actively switched by selecting the generator or consumer arrow system. This inverts the direction of all currents.

MONITORING AND ALARMING

The instruments of the AM series support the on-site analysis of acquired measured data in order to initiate directly immediate or delayed measures without involving a separate control. This facilitates the protection of equipment and also monitoring of service intervals.
The following items are available:

- 12 liwith values
- 8 monitoring functions with 3 inputs each
- 1 collective alarm as a combination of all monitoring functions
- 3 operating hour counters with definable running conditions

The available digital outputs may be used directly for the transmission of liwith values and monitoring functions as well as the resettable collective alarm.

A text may be allocated to each monitoring function which is used both for the alarm list and the event entries in the datalogger.

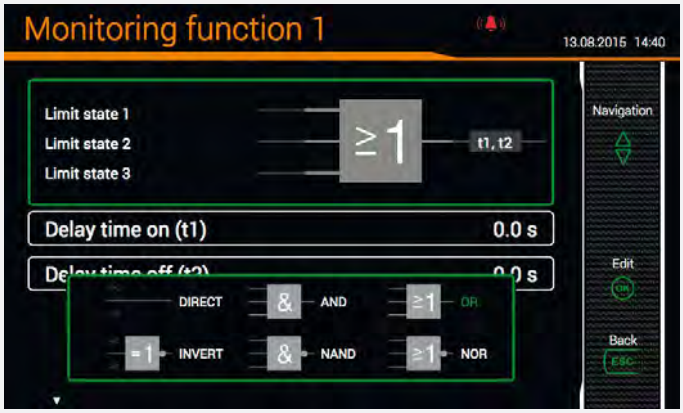

DATA RECORDING

The devices may be equipped with a high-performance data logger which has the following recording options in its comprehensive version:

- **PERIODIC DATA**
  Selectable measured values are saved in regular intervals, e.g. to acquire load profiles (intervals of 10s to 1h) or periodic meters readings (e.g. daily, weekly, monthly).

- **EVENTS**
  A type of logbook which records the occurrence of events together with time information: Triggering and declining of monitoring functions, changes in configuration, power cuts and much more.

- **DISTURBANCE RECORDER**
  Recording of current and voltage progression in case of disturbances on basis of 1/2 cycle RMS values (AM1000 / AM3000 only). In AM3000, the additional registration of the curve shape during the disturbance is also possible. This type of registration corresponds to the requirements of the IEC 61000-4-30 power quality standard.

The event list and the recordings of the disturbance recorder may be visualised right on the device. More extensive analyses are available via the webpage of the device.
An SD card is used as a memory element by AM2000 / AM3000.
AM1000 uses an internal memory element.

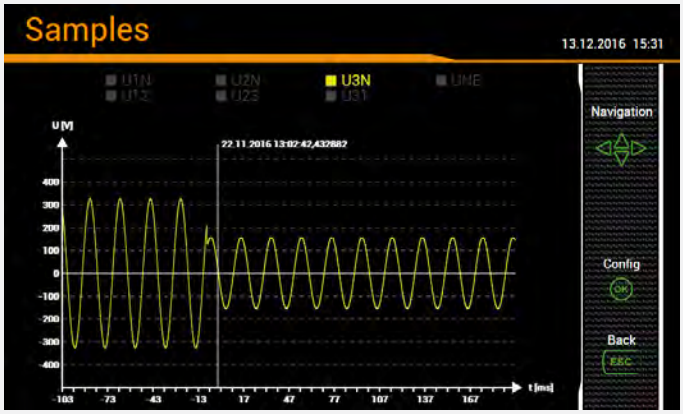

APLUS

To aquire several variables of any heavy current system simultaneously.

The APLUS is a powerful platform for measuring, monitoring and analyzing power systems. The focus is on highest Swiss quality and maximum customer benefit. This universal measurement device is available in three major versions: With TFT or LED display or in top-hat rail version without display. It can be easily integrated into the process environment on site. It provides a wide functionality, which may be further extended by means of optional components.
The connection of the process environment may be performed by means of the communication interface, via digital I/Os or via analog outputs.

APPLICATION

The APLUS is designed for applications in power distribution, in strongly distorted industrial environments and in building automation.
Nominal voltages up to 690 V can directly be connected.
The APLUS is the ideal device for demanding measurement tasks where fast, accurate and insensitive analysis of power systems or loads is required. In addition it can also replace fault or liwith monitoring devices, small control systems and summation stations of energy management systems.

SYSTEM STATE ACQUISITION
- High updating rate
- Precise and uninterrupted
- For any power systems

MONITORING UNIT
- Universal analysis of liwith values
- Combination of liwith values
- Analysis of internal / external states

REMOTE CONTROL AND MAINTENANCE
- Remote I/O
- Remote data acquisition and parameterization
- Changeover local/remote operation

UNIVERSAL PROCESS-I/O
- State, pulse and synchronization inputs
- State and pulse outputs
- Relay outputs
- Analog outputs ±20 mA

OPEN COMMUNICATION
- Free definable process image
- Modbus/RTU via RS485
- Modbus/TCP via Ethernet
- Profibus DP up to 12 MBaud

ENERGY MANAGEMENT
- Active and reactive meters
- Load profiles, load curves
- Trend analysis
- Variance of system load
- Connection of external meters

DATA DISPLAY
- Measurements and meters
- Liwith states
- Plain text alarming
- Alarm acknowledge and reset
- Free configurable display

MONITORING OPERATING RESOURCES
- Operating times
- Service intervals
- Durations of overload situations
- Operation feedbacks

LONG-TERM DATA STORAGE
- Measurement progressions
- Disturbance information
- Events/alarms/system events
- Automatic meter readings

POWER QUALITY ANALYSIS
- Harmonic analysis
- Extended reactive power analysis
- Variance of short/long term load
- Power system imbalance
- Nominal condition monitoring

APLUS without display

Measurement of power quantities

The APLUS can be adapted fast and easily to the measurement task by means of the CB-Manager software. The universal measurement system of the device may be used directly for any system, from single phase up to 4-wire unbalanced networks, without hardware modifications. Independent of measurement task and outer influences always the same high performance is achieved.

The measurement is performed uninterrupted in all four quadrants and can be adapted to the system to monitor in an optimal way. The measurement time as well as the expected system load can be parameterized.

Parameterization, service and measurement acquisition

These functions are facilitated by the included CB-Manager software. A security system can be activated to restrict the access to device data. This way e.g. changing a liwith value via display can be locked, but a setting via configuration could still be possible.

For communication one of the following interface combinations can be selected:

- Modbus/RTU interface (RS-485)
- Ethernet interface with Modbus/TCP protocol
- Profibus/DP and Modbus/RTU
- 2 Modbus/RTU interfaces (RS-485)
- Modbus/RTU (RS-485) and Ethernet interface with Modbus/TCP protocol

These combinations allow providing measurement data via one of the interfaces and using the other one either for an energy management system, remote maintenance or local maintenance without interrupting the device communication.

Logic module: Monitoring of operating behaviour

To effectively protect operating resources it must be assured that multiple system quantities are within their allowed range. The logic module offers a comfortable facility to combine multiple liwith values and to trigger further actions such as alarming, event registration or disturbance recording.
To monitor the operating time of specific loads up to three operating time counters are supported, which are controlled by means of liwith values or digital operating feedbacks.

Selection of possible applications for the logic module:

- Function of protective relays (e.g. over-current, phase failure or imbalance)
- Changeover of the present operating mode, such as local/remote (day/night) operation
- Controlling the recording of alarms, events and acknowledgment procedures
- Monitoring of external devices: circuit states or self monitoring signals

Power quality analysis instead of failure analysis

But what is really needed when monitoring power quality is a statement if the used operating resources will work undisturbed under the real existing conditions.
The APLUS therefore does not work with statistics, but examines the real environment, to allow performing a corresponding immunity analysis.

- Variation of the system load
- System imbalance
- Additional load by harmonics
- Violations of liwith values
- Fundamental and distortion reactive power

- Clear and explicit display of measured data
- Free composition of measurement displays
- Alarm handling
- Device configuration
- Reset of minimum / maximum values
- Reset of meter contents
- Free definable plaintext display for alarming
- Preference display and roll mode

You may select optionally either a TFT or LED display for on-site data visualization. The TFT color display mainly focus on modern design, graphical analysis and language specific operation, whilst the LED display offers excellent readability, even from a distance and almost every angle. Both displays are operated via keys suited for industrial applications. If needed access rights for both the user via display and via communication interface may be defined by activating the security system.

FREE COMPOSITION OF THE REQUIRED FUNCTIONS

The APLUS basic unit is already comprehensively equipped with a relay output for alarming, a digital output, e.g. for pulse output, and a digital input, e.g. for tariff switching.
For applications where this is not sufficient, the optional I/O extensions 1 or 2 are available:

- I/O extension 1: 2 relays, 4x ±20 mA (galvanically isolated), 2 digital I/O's 12/24 V DC
- I/O extension 2: 2 relays, 6 digital I/O's 12/24 V DC

The digital I/Os of the I/O extensions can be configured individually as inputs or outputs.

TECHNICAL DATA

Measuring input:	Nominal voltage up to 693 V (PH-Ph), nominal current up to 5 A, override up to 7.5 A programmable, nominal frequency 50/60 Hz Rogowski current sensors with automatic measuring range (0 to 3000 A)
Systems:	Single-line AC, split phase, 3/4 wire rotary current balanced / unbalanced load, rotating clockwise and counter-clockwise
Energy meter:	Active energy incoming+outgoing, reactive energy incoming + outgoing + inductive + capacitive for measured system as well as incoming active and reactive energy per phase, max. 7 meters for external variables via digital input. High and low tariff for all meters, if tariff switching is active
Accuracy:	Voltage and current 0.1%, power and voltage asymmetry 0.2 %harmonics, THD and TDD 0.5%, power factor ±0.1°, frequency ±0.01 Hz Active energy Class 0.5S (EN 62 053-22), reactive energy Class 2 (EN 62 053-23) Analog outputs ±0.2%
Dimensions:	96 x 96 x 105 mm (with display) 91 x 91 x 106.3 mm (without display)

DATA LOGGER (OPTION)

The optional data logger can be used for the non-volatile storage of measured value progressions (e.g. load profiles), events, alarms, meter readings and disturbance recordings. The SD card used for storage may be replaced on-site. For a tabular or graphical analysis of the recorded data the CB-Analyzer software is available.

ACCESSORIES

Article No.	Description
163 189	Interface converter USB <> RS485 (Modbus)
172 718	Rogowski current sensors, single phase ACF3000_4/24, with 2 m cable
173 790	Rogowski current sensors, single phase ACF3000_31/24, with 5 m cable

For CB-Manager configuration software, see page 75
For CB-Analyzer analysis software for logger and lists, see page 75

SIRAX BM1200, BM1400, BM1450

	BM1200	BM1400	BM1450
	1-phasenetwork 2-wire 3-phasenetwork 3-/4-wire unbalanced load	3-phasenetwork 3-/4-wire unbalanced load	DC energy measurement 4 channels / external shunt
MEASURING INPUT			
Nominal voltage	63.5 / 133 / 239 V_{LN} 100 ... 480 V_{LL} (110 / 230 / 415 V_{LL})	57.7...277 V_{LN} 100 ... 480 V_{LL} (110 / 415 V_{LL})	10...60 VDC / 61...200 VDC / 201...1000 VDC
Nominal current	1 or 5 A	1 or 5 A	1 ... 20 KA
Shunt adjustment range	–	–	50...150 mV
Frequency range	45 ... 50/60 ... 65 Hz	45 ... 50/60 ... 66 Hz	45 ... 50/60 ... 65 Hz
POWER SUPPLY	60 ... 300 V AC/DC –	100 ... 250 V AC/DC –	60 ... 300 V AC/DC –
ACCURACY			
Voltage / current	±0,5 % / ±0,5 %	±0,5 % / ±0,5 %	±0,5 % / ±0,5 %
Power / reactive power	±0,5 % / ±1,0 %	±0,5 % / ±0,5 %	±0,5 %
power factor	±3,0 %	±3,0 %	
THD voltage, current	±2,0 %	±1,0 %	
Active / reactive / apparent energy	Class 1,0 / Class 1,0 / Class 2	Class 0.5 / Class 2	Class 1
DIMENSIONS [W X H X D]	96 x 96 x 35/55 mm	96 x 96 x 80 mm	96 x 96 x 80 mm

STOCK VARIATIONS

Article No.	Description
174 962	**SIRAX BM1200**, 3PH - 415VL-L - 5A/1A - 60…300 V AC/DC
174 970	**SIRAX BM1200**, 3PH - 415VL-L - 5A/1A - 60…300 V AC/DC - RS485
176 695	**SIRAX BM1400**, 0,5 - 3PH - 110VL-L - 5A/1A - 100…250 V AC/DC
176 702	**SIRAX BM1400**, 0,5 - 3PH - 110VL-L - 5A/1A - 100…250 V AC/DC - RS485, 1 Relai, 2 x 4…20 mA analogue
176 710	**SIRAX BM1400**, 0,5 - 3PH - 110VL-L - 5A/1A - 100…250 V AC/DC, Ethernet
174 988	**SIRAX BM1400**, 0,5 - 3PH - 440VL-L - 5A/1A - 100…250 V AC/DC
174 996	**SIRAX BM1400**, 0,5 - 3PH - 440VL-L - 5A/1A - 100…250 V AC/DC - RS485 - 1 Puls - 2 x 4…20 mA analogue
175 001	**SIRAX BM1400**, 0,5 - 3PH - 440VL-L - 5A/1A - 100…250 V AC/DC - Ethernet
177 065	**SIRAX BM1450**, 10…60 V DC - 50…150 mV - 60…300 V AC/DC - RS485, 4 Relais
177 073	**SIRAX BM1450**, 61…200 V DC - 50…150 mV - 60…300 V AC/DC - RS485, 4 Relais
177 081	**SIRAX BM1450**, 201…1000 V DC - 50…150 mV - 60…300 V AC/DC - RS485, 4 Relais

175 134	**SIRAX BT5700**, 0,5 - 3PH - 440VL-L - 5A/1A - 100…250 V AC/DC - RS485
175 275	**SIRAX BT5700**, 0,5 - 3PH - 440VL-L - 5A/1A - 12…48 V DC - RS485

SIRAX MM1200, MM1400, BT5700

MM1200	MM1400	BT5700
3-phasenetwork 3-/4-wire unbalanced load	3-phasenetwork 3-/4-wire unbalanced load	3-phasenetwork 3-/4-wire unbalanced load
57.7...277 V_{LN} 100 ... 480 V_{LL} (440 V_{LL}) 1 or 5 A – 45 ... 50/60 ... 66 Hz	57.7...288 V_{LN} 100 ... 500 V_{LL} (500 V_{LL}) 1 or 5 A – 45 ... 50/60 ... 66 Hz	63.5 V_{LN} 100 ... 692.8 kV_{LL} (440 V_{LL}) 1 or 5 A – 45 ... 50/60 ... 65 Hz
100 ... 250 V AC/DC –	60 ... 300 V AC/DC –	100 ... 250 V AC/DC 12 ... 48 V AC/DC
±0,5 % / ±0,5 % ±0,5 % / ±0,5 % ±3,0 % ±1,0 % Class 0,5 / Class 0,5 / Class 2	±0,2 % / ±0,2 % ±0,2 % / ±0,2 % ±2,0 % ±1,0 % Class 0,5S / Class 0,5S / Class 2,0	±0,5 % / ±0,5 % ±0,5 % / ±0,5 % ±1,0 % – Class 0.5 / Class 2
96 x 96 x 80 mm	96 x 96 x 80 mm	96 x 96 x 117 mm

STOCK VARIATIONS

Article No.	Description
175 019	**SIRAX MM1200**, 3PH - 440VL-L - 5A/1A - 100…250 V AC/DC - DE
175 027	**SIRAX MM1200**, 3PH - 440VL-L - 5A/1A - 100…250 V AC/DC - EN
175 035	**SIRAX MM1200**, 3PH - 440VL-L - 5A/1A - 100…250 V AC/DC - ES
175 043	**SIRAX MM1200**, 3PH - 440VL-L - 5A/1A - 100…250 V AC/DC - FR
175 051	**SIRAX MM1200**, 3PH - 440VL-L - 5A/1A - 100…250 V AC/DC - RS485 - 1 Puls - 2 x 4…20 mA analogue DE
175 069	**SIRAX MM1200**, 3PH - 440VL-L - 5A/1A - 100…250 V AC/DC - RS485 - 1 Puls - 2 x 4…20 mA analogue EN
175 077	**SIRAX MM1200**, 3PH - 440VL-L - 5A/1A - 100…250 V AC/DC - RS485 - 1 Puls - 2 x 4…20 mA analogue ES
175 085	**SIRAX MM1200**, 3PH - 440VL-L - 5A/1A - 100…250 V AC/DC - RS485 - 1 Puls - 2 x 4…20 mA analogue FR
177 099	**SIRAX MM1200**, 3PH - 440VL-L - 5A/1A - 100…250 V AC/DC - Ethernet - DE
177 106	**SIRAX MM1200**, 3PH - 440VL-L - 5A/1A - 100…250 V AC/DC - Ethernet - EN
175 093	**SIRAX MM1400**, 3PH - 500VL-L - 5A/1A - 60…300 V AC/DC - RS485 - DE
175 100	**SIRAX MM1400**, 3PH - 500VL-L - 5A/1A - 60…300 V AC/DC - RS485 - EN
175 118	**SIRAX MM1400**, 3PH - 500VL-L - 5A/1A - 60…300 V AC/DC - RS485 - ES
175 126	**SIRAX MM1400**, 3PH - 500VL-L - 5A/1A - 60…300 V AC/DC - RS485 - FR
177 114	**SIRAX MM1400**, 3PH - 500VL-L - 5A/1A - 60…300 V AC/DC - RS485, 2 Relais - DE
177 122	**SIRAX MM1400**, 3PH - 500VL-L - 5A/1A - 60…300 V AC/DC - RS485, 2 Relais - EN
177 130	**SIRAX MM1400**, 3PH - 500VL-L - 5A/1A - 60…300 V AC/DC - Ethernet - DE
177 148	**SIRAX MM1400**, 3PH - 500VL-L - 5A/1A - 60…300 V AC/DC - Ethernet - EN

SINEAX A210 I SINEAX A220

For the complete acquisition of the system state of a three-phase heavy current system.

SINEAX A210

SINEAX A220

CUSTOMER BENEFIT

- All relevant variables of a heavy current system with only one device
- Replacement for numerous analog displays
- Large LED display which can be read from a distance
- 2 digital outputs for alarms or output to external counter mechanism
- Integrated active and reactive power meters, 5 interval times each for P, Q and S
- Functionality extendable with plug-in modules (bus connection, logger, analog outputs)

TECHNICAL DATA

Meas. input:	Nominal voltage 500 V (Ph–Ph), nominal current 1/5 A, nominal frequency 50/60 Hz
System configuration:	Single-phase alternating current, 3/4-wire three-phase current with balanced / unbalanced load
Display:	3 digits + sign, frequency 4-digit, meter 8-digit
Accuracy:	Voltage and current ±0.5%, power, power factor, energy ±1.0% frequency ±0.02 Hz (absolute). All details refer to nominal values
Power supply:	100–230 V AC/DC or 24–60 V AC/DC
Dimensions:	A210: 96 x 96 x 46 mm, A220: 144 x 144 x 46 mm Assembly on top-hat rail with adaptor (article No. 154 055) is possible

APPLICATION

The instruments are designed for measurements in electrical distribution system or industrial plants. All parameters may be set via the display. Configuration can also be performed using A200plus software if an EMMOD201 (Modbus) or EMMOD203 (Ethernet) extension module has been temporarily or permanently plugged into the basic device.
The digital outputs cannot only be used to drive external counters but also for alarming in case of liwith violations. If, for example, the measured variable of current is tested for exceeding a liwith value, the same is triggered as soon as at least one of the phase currents exceed the liwith value. A liwith value on the neutral wire helps to minimise the risk that an undersized neutral wire causes insulation damage or even fires. An extension module may be plugged in to connect supervisory systems or to network devices via Modbus, Profibus, LON or Ethernet.

STOCK VARIANTS

Article No. A210	Input	Power supply	Test protocol	Mounted extension module
149 783	500 V / 5 A	100 – 230 V AC/DC	without	without
150 300		24 – 60 V AC/DC		
152 447	500 V / 1 A	100 – 230 V AC/DC		

SINEAX A230s I SINEAX A230

Complete acquisition and analysis of the system state of a three-phase heavy current system.

SINEAX A230s

SINEAX A230

CUSTOMER BENEFIT

- System can be analysed in relation to unbalance of voltages
- Determination of individual harmonic contents and THD
- 3 different modes for specific measured value display
- Additional mean values also for non-power variables including trend analysis

TECHNICAL DATA

Meas. input:	Nominal voltage 500 V (Ph–Ph), nominal current 1/5 A, nominal frequency 50/60 Hz
System configuration:	Single-phase alternating current, 3/4-wire three-phase current with balanced/ unbalanced load, also in Aron or open-Y measuring circuit available
Display:	4 digits + sign, meter 8 digit, display mode programmable
Accuracy:	Voltage and current ±0.2%, power, power factor, energy ±0.5%, frequency ±0.02 Hz (absolute). All details refer to nominal values
Power supply:	100–230 V AC/DC or 24–60 V AC/DC
Dimensions:	A230s: 96 x 96 x 46 mm, A230: 144 x 144 x 46 mm Assembly on top-hat rail with adaptor (article No. 154 055) is possible

APPLICATION

Electrical distribution systems and industrial plants are increasingly subjected to non-linear loads like computers or electronically controlled motors. This might lead to premature fuse blow-outs, overload of the neutral wire or malfunctions of devices. A230s/A230 is able to determine this additional load.
The harmonics analysis assesses whether an active correction to improve the system quality is required. Special consideration should be given to the current harmonics of the 3rd, 9th and 15th order which add up in the neutral wire.
Using the system unbalance the load of a transformer may be analysed. If the same is unbalanced loaded under nominal load this will lead to compensating current and thus to additional heating. The consequence may be damage to the insulation or even the destruction of the transformer.

ACCESSORIES

For extension module EMMOD20x see page 38
For configuration software A200plus see page 76
For interface adapter cable RS232 see page 73

EXTENSION MODULES

The extension modules enlarge the functionality of the A210, A220, A230s and A230 power monitors. They can be simply snaped onto the back of the basic instrument and take their power supply from it.

Functionality EMMOD...	201	202	203	204	205	206
INTERFACE						
RS232/RS485 (Modbus/RTU)	▪					
Ethernet (Modbus/TCP)			▪			
Profibus DP (RS485)				▪		
LON (communication with U160x)					▪	
LON (Standard)					(▪)	
M-Bus						▪
DATA LOGGER						
Mean values	≤ 2		≤ 14			
Min/Max interval values (A230s / A230 only)			≤ 9			
Time reference via PC time	▪					
Time reference via built-in RTC			▪			
OUTPUTS						
Analog outputs 0/4..20 mA		2				
Digital outputs 125 V DC					1	
DIGITAL INPUTS						
Synchronizazion pulse for mean-values			1			
Tariff switching HT/NT			1			
Synchronization or HT/NT	1				(1)	1
PARAMETRIZATION OF THE MODULE						
via software A200plus	▪					
via basic device		▪			▪	▪
via GSD in the control system				▪		
via software A200plus and browser			▪			
ARTICLE NUMBERS	150 285	155 574	155 582	158 510	156 639 156 647	168 965

All devices of the A series (A210, A220, A230s, A230) can be equipped with an adapter for mounting on top-hat rail. If the basic device is also equipped with an extension module, in addition a set with longer fixing clips is required, to allow the fixing of the top-hat rail adapter.

ACCESSORIES

Top-hat rail adapter for A210, A220, A230s, A230, article No. 154 055
Fixing clips as set (4 pieces) for top-hat rail adapter with extension module, article No. 154 394

POWER QUALITY

The quality of energy available in electric networks is determined by the consumers connected. Their power consumption is often non-linear and influences the network quality negatively. This may impair the smooth operation of consumers (e.g. of production lines or computer centres). The quality of the network voltage which a power supplier has to provide is thus determined by international standards (e.g. EN 50160). But also energy consumers and equipment manufacturers must limit their feedback to the power system. For monitoring the compliance with standard values devices for temporary, mobile use and firm installation in the facility part to be monitored are available.

Traditionally, power quality monitoring is only conducted as a reaction to trouble such as device failure, plant malfunctions, process interruption or communication breakdown. However, all these problems cost money and nobody wants to experience the same thing again just to be able to create a corresponding record for analysis. Therefore, the greatest advantage of continuous power quality monitoring is that users put themselves in a position to proactively build up their knowledge thus increasing system availability.

Devices such as **LINAX PQ3000** or **MAVOSYS 10** help to detect trouble before it can do any damage and to provide data for the identification of the root cause in case an event actually occurs.

LINAX PQ3000 / PQ5000

Power quality monitoring in electric mains.

Panel mounting version

Top-hat rail mounting version

LINAX PQ3000 / PQ5000 is a Class A device according to the IEC 61000-4-30 Ed. 3 power quality standard. It can thus provide reliable and comparable information for regulatory agencies, negotiations with energy suppliers or internal quality control. It also supports a conformity report according to the EN 50160 voltage quality standard.

CUSTOMER BENEFIT

- Power quality analysis in Class A, according to IEC 61000-4-30 Ed. 3
- Data exchange format for power quality data: PQDIF
- Energy consumption analysis, Class 0.5S according to EN 62053-22/24
- Network state monitoring: 0.1 % (U,I), 0.2 % (P,Q,S)
- Ethernet: Modbus/TCP, NTP, http (parameterising via web page)
- Modbus/RTU (PQ3000: optional)
- Optional extensions
  - Uninterrupted power supply: 5 times 3 minutes
  - Relay outputs (2 channels per module)
  - Analog outputs: 2 or 4 channels ±20 mA; only 1 module
  - Digital inputs: 4 channels active or passive

DATA RECORDING

Apart from the automatic recording of power quality statistics, the high-performance data logger provides the following recording options:

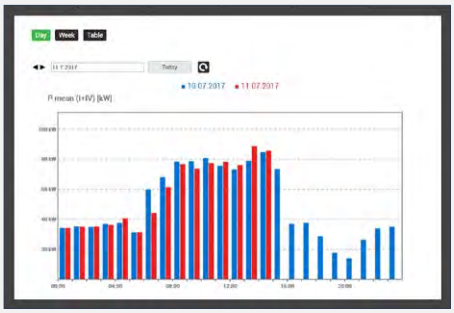

• PERIODIC DATA

This feature allows to record the time course of measured variables. Averaged measurements or meter contents serve as base and are saved in regular intervals. Typical applications are the acquisition of load profiles (intervals of 10s to 1h) or the determination of the energy consumption from the difference of meter readings. For both categories pre-defined courses are available, based on the system power values, and as well courses for freely selectable basic quantities.
For further processing periodic data can be exported in Excel format for a definable time range.

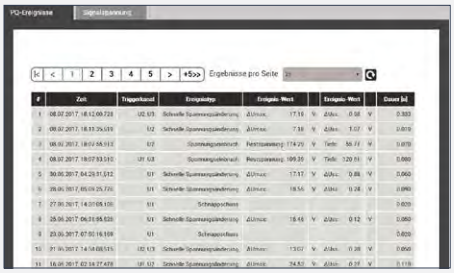

• EVENTS

Here the occurence of events or alarms is recorded in form of a list with time information. A distinction is made between self-defined events (such as ON/OFF of limit states or monitoring functions) which the user can classify as alarm or event and the so-called operator list in which system events such as changes of the device configuration, reset operations, powering the device and many more are held.

• PQ EVENTS

The occurrence of monitored PQ events is available in list form with the most important information about the events. Each entry can be directly selected to switch to the graphical event presentation. There the courses of the RMS half-cycle values and the waveshape during the disturbance are available, divided into presentations of all voltages, all currents and mixed displays.

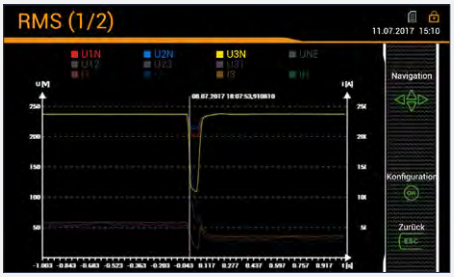

Event lists, PQ event recordings, mean value courses (load profiles) and meter readings may be displayed directly at the device or via the device webpage.

Further analysis of the PQ events is possible by means of the SMARTCOLLECT PM20 software (see page 42).

MONITORED VOLTAGE PHENOMENON	CAUSES	POSSIBLE CONSEQUENTIAL PROBLEMS
Mains frequency	• Loss of power generators • Large load changes	• Instability of the mains power supply
Magnitude of supply voltage 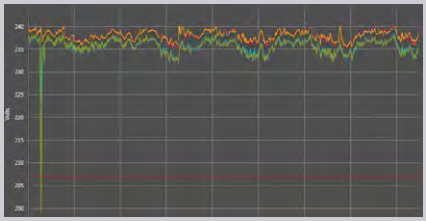	• Changes in grid load	• Disruption of equipment • System shut-down • Loss of data
Flicker and rapid voltage changes (RVC)	• Frequent load changes • Start of engines	• Flickering lighting • Impairment of the performance of exposed people
Supply voltage dips and swells 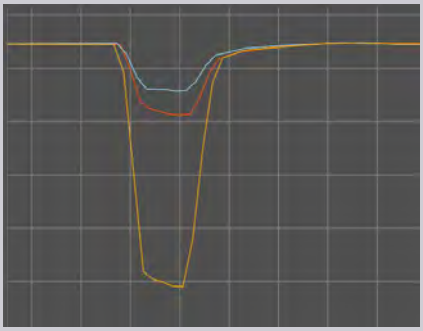	• Large load changes • Short circuit, contact to earth • Thunderstorm • Power supply overload • Feed-in of renewable energies such as wind or photovoltaic energy	• Disruption of equipment such as control or drive systems • Operational interruption • Data loss in control systems and computers
Voltage interruptions	• Short circuit • Blown fuses • Component failures • Planned supply interruption	• Production stoppage • Process interruptions • Data loss in control systems and computers
Supply voltage unbalance	• Uneven load on phases due to one or two-phase consumers	• Current in the neutral conductor • Overload / overheating of equipment • Increase of harmonics
Voltage harmonics 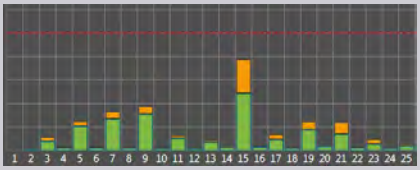	• Non-linear loads such as frequency converters, rectifiers, switching power supplies, arc furnaces, computers, fluorescent tubes etc.	• Reduction of machine efficiency • Increased energy losses • Overload / overheating of equipment • Current in the neutral conductor
Voltage interharmonics, mains signalling voltage on the supply voltage	• Frequency converters and similar control devices	• Flicker • Malfunction of ripple control

Current (magnitude, harmonics, interharmonics, events)

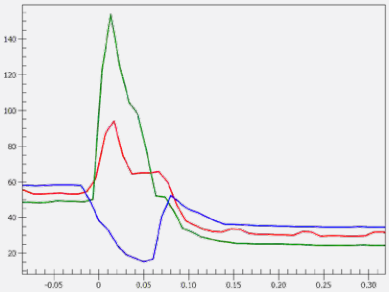

In parallel with the voltages the corresponding current values are recorded in the same manner.

Current course during voltage dips in the mains

MAVOSYS 10

Monitoring system for analyzing power quality, power and energy.

This mains analyser exceeds the classic maximum of 8 channels for voltage and current inputs. Users may choose between input modules for voltages (4 channels), current (4 channels) and digital signals (8 channels). Applications requiring previously two or more devices may now be realised by a combination of up to 4 modules in only one MAVOSYS 10.

CUSTOMER BENEFIT

- Combination of up to four virtual analyzers in a single housing
- Input modules for 4 x voltage, 4 x current, 8 x digital signal
- Local operation and visualization with an optional 1/4 VGA touch-screen
- Certification in accordance with IEC 61000-4-30, class A
- Time synchronization via NTP server and/or optional GPS receiver
- Internal and external cross-triggering
- Complies with all national and international standards
- Ethernet 10/100 BaseT, RS232 and RS485 interfaces included as standard equipment
- TCP/IP, HTTP, XML and Modbus TCP/RTU communication protocols

PRECONFIGURED COMPLETE SYSTEMS

Article No.	Main module	Voltage module	Current module
M818A	**Basic device standard**, 4 slots, Ethernet, RS232/RS485, voltage supply 12 VDC	1 x 4 channel voltage module with screwed connections, 0 … 600 V AC/DC	1 x 4 channel current module 5A, 5 x overload, current transformer, screwed connection
M818B	**Basic device for control panel installation** 4 slots, Ethernet, RS232/RS485, voltage supply 90…250 VAC / 105 … 125 VDC	1 x 4 channel voltage module with screwed connections, 0 … 600 V AC/DC	1 x 4 channel current module 5A, 5 x overload, current transformer, screwed connection
M818C	**Basic device for control panel installation with 1/4 VGA touchscreen**, 4 slot, Ethernet, RS232/RS485, voltage supply 90 … 250 VAC / 105 … 125 VDC	1 x 4 channel voltage module with screwed connections, 0 … 600 V AC/DC	1 x 4 channel current module 5A, 5 x overload, current transformer, screwed connection
M818D	**Monitor for voltage monitoring**, 1 slot	1 x 4 channel voltage module with screwed connections, 0 … 600 V AC/DC	

The current price list as well as our homepage contain further configuration options.

PQ EVALUATION SOFTWARE FOR PQ3000 / PQ5000

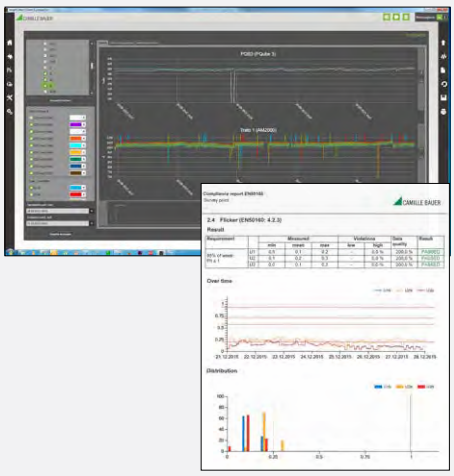

SMARTCOLLECT PM20

LINAX PQ3000/PQ5000 stores the acquired power quality data in a standardised Power Quality Data Interchange Format (PQDIF) according to IEEE 1159.3. Many evaluation programs for the analysis of power quality data support this data format, e.g. SMARTCOLLECT PM20 of Camille Bauer Metrawatt or PQView of Electrotek Concepts.

The storage principle provides daily PQDIF files containing either statistical data, histograms or event recordings. The creation is done shortly after midnight for the past day. All these files may also be generated manually via the service menu of the device at any time for the ongoing day.

By means of the SMARTCOLLECT PM20 software, the PQDIF files of the device can be displayed, stored in the database and analysed. A conformity report can be prepared, as well.

Most data displays are also available via the local GUI or the web interface of PQ3000/PQ5000.

MONITORING AND CONTROLLING

In addition to measuring and displaying process variables, we o er extensive solutions to process the acquired data.

2-IN-1 means:
- The functionality of a highly precise instrument is combined with a programmable logic control
- Measuring and derived automation tasks can be immediately solved

Further field devices can also be easily connected to our control via Modbus interfaces. In this way, further energy consumption, status or measuring data is collected and processed.

CENTRAX CU3000 / CU5000

Comprehensive instrument for measurement and control of power systems

CENTRAX CU3000 / CU5000 combines the functionality of a highly accurate instrument for heavy current application with the possibilities of a freely programmable PLC in one housing. This makes the need of a separate control, a control system, a remote display or an additional data collector superfluous.
The measuring part of the instrument determines more than 1500 high-quality items of status, energy consumption and power quality. The control application is based on CODESYS and can now, depending on the application, process this data logically, use it in control algorithms or interact with energy generation or consumers as the situation demands. The instrument can communicate with the process environment via freely selectable I/Os and Modbus interfaces. The ADVANCED and PROFESSIONAL versions offer the additional possibility of importing measured data of other field instruments into the control application via Modbus interfaces for further processing.
CENTRAX CU3000 / CU5000 can thus be used for autarkic solutions in the areas of energy management, control and optimisation of the energy consumption, utility monitoring and other general automation and control tasks. A connection to higher-ranking systems is possible at any time.

CODESYS
Development environment

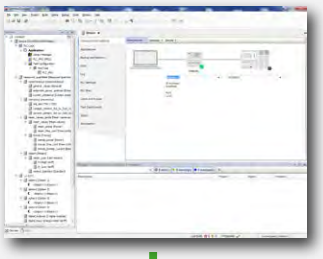

Control generation with standard languages according to IEC61131-3:

- LD Ladder diagram
- IL Instruction list
- FBD Function block diagram
- SFC Sequential function chart
- ST Structured text
- CFC Continuous function chart

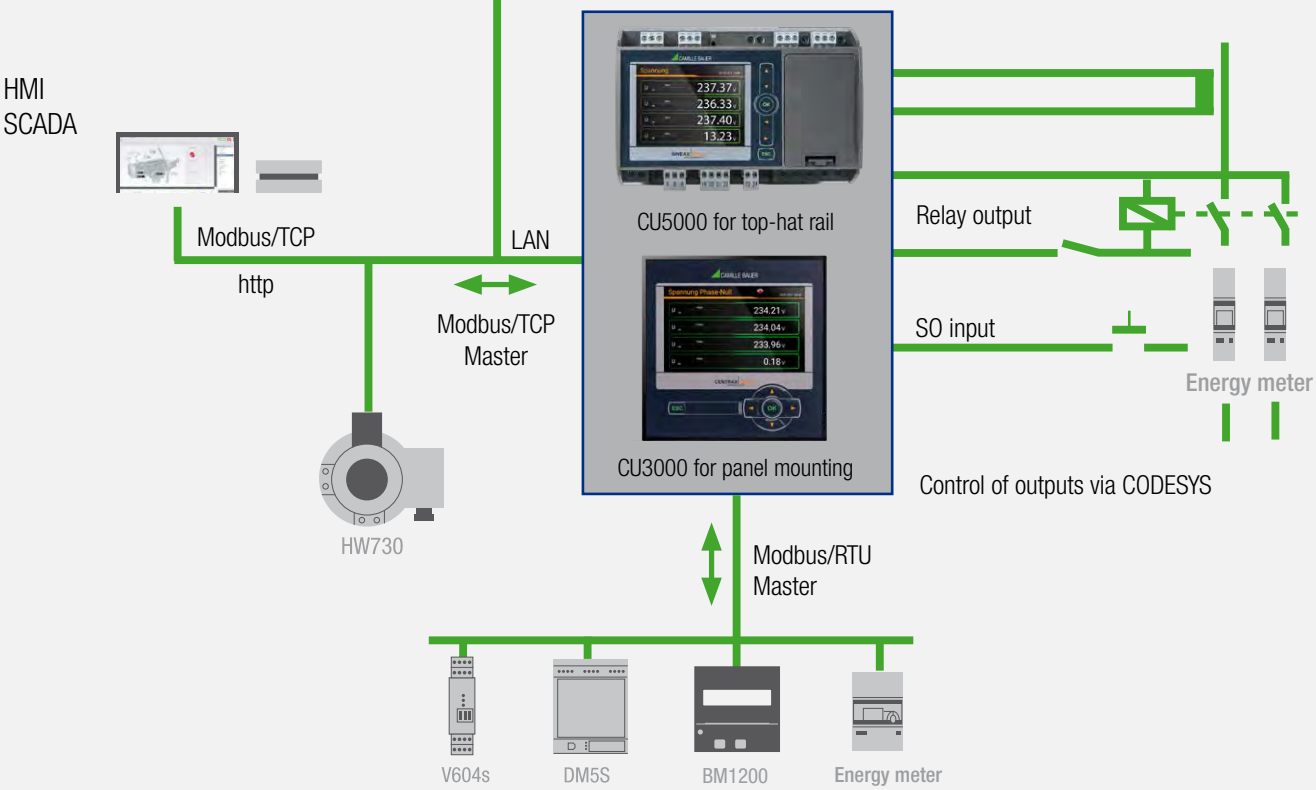

INDIVIDUAL SYSTEM SOLUTIONS

The approach of the CENTRAX CU3000 / CU5000 is the use of the SINEAX AM3000 resp. DM5000 as a measuring instrument, supplemented by a freely programmable control application, based on the widely used CODESYS, which takes over the function of the control system or PLC. The control functionality is provided in different performance classes:

BASIC: Flexible processing of the measuring data of the measuring instrument with full use of the I/O functionality

ADVANCED: In addition, the possibility to read and use data from other measuring instruments via Modbus RTU / TCP, as well as to trigger time-depending processes

PROFESSIONAL: To create your own web visualization and to use the local display for self-defined visualizations

POSSIBLE APPLICATIONS

- Load balancing, load control
- Acquisition of energy consumption of any kind
- Energy management, summation station
- Monitoring of production equipment such as transformers, motors, generators, etc.
- Load management, peak load optimization, power factor compensation
- Local data display and control unit
- Monitoring of changes (Long-time-Drift / Degradation)
- Start / Stop process control, i.e. for control and monitoring of process steps

MEASURED VALUE GROUP	APPLICATION
INSTANTANEOUS VALUES	
U, I, IMS, P, Q, S, PF, LF, QF ...	Transparent monitoring of present system state
Angle between voltage phasors	Fault detection, connection check, sense of rotation check
Min/max of instantaneous values with time stamp	Determination of grid variable variance with time reference
EXTENDED REACTIVE POWER ANALYSIS	
Total reactive power, fundamental frequency, harmonics	Reactive power compensation
cosϕ, tanϕ of fundamental frequency with min values in all quadrants	Verification of specified power factor
HARMONICS ANALYSIS (ACCORDING TO EN 61 000-4-7)	
Total harmonics content THD U/I and TDD I	Evaluation of the thermic load of equipment
Individual harmonics U/I up to 50th	Analysis of system perturbation and consumer structure
IMBALANCE ANALYSIS	
Symmetrical components (positive, negative, zero sequence system)	Equipment overload protection
Imbalance (from symmetrical components)	Fault/earth contact detection
Deviation from U/I mean value	
ENERGY BALANCE ANALYSIS	
Meters for the demand/supply of active/reactive power, high/low tariff, meters with selectable fundamental variable	Preparation of (internal) energy billing
Power mean values active/reactive power, demand and supply, freely definable mean values (e.g. phase power, voltage, current and much more).	Determination of energy consumption versus time (load profile) for energy management or energy efficiency verification
Mean value trends	Energy consumption trend analysis for load management
OPERATING HOURS	
Operating hours of the device	

VIDEOGRAPHIC RECORDERS

Universally configurable data management systems to store, visualise, analyse and communicate measured data.

	LINAX DR2000	LINAX DR3000
Display	TFT color graphic, 145 mm (5,7 in) Resolution: 640 x 480 pixel	TFT color graphic, 178 mm (7 in) Resolution: 800 x 480 pixel
Universal analogue inputs	0 / 4 / 8 / 12	0 / 4 / 8 / 12 / 16 / 20 or up to 40 for fieldbus
HART inputs	–	▪
Digital inputs	6	6 / 14
Analogue outputs	–	2
Loop power supply	1 x 24 V DC, max. 250 mA	1 x 24 V DC, max. 250 mA
Count inputs (pulse) / operating time counter	▪	▪
Event input	▪	▪
Alarm set points / relays	30 / 6 relays	60 / 6 or 12 relays
Operation	Navigator / keyboard / mouse	Navigator / keyboard / mouse
Signal analysis	Intermediate, daily, monthly, yearly reports	Intermediate, daily, weekly, monthly, overall/annual reports
Process screen	–	up to 10
E-mail functions	▪	▪
Integrated Web Server	▪	▪
Mathematics function	4 mathematics channels (optional)	12 mathematics channels (optional)
Integration	▪	▪
Calculation factor for integrated quantities	▪	▪
Batch function	–	optional
Tele-alarm function	–	optional
Text input	–	can be preset 30 x
Memory	Internal memory + SD card + USB stick	Internal memory + SD carte + USB stick
Scan rate	100 ms	100 ms
Interfaces	USB (front), Ethernet (back), RS232/RS485 (optional), Modbus RTU/TCP Slave (optional)	USB (front), RS232/RS485, PROFINET I/O Device, EtherNet/IP Adapter, Modbus RTU/TCP Slave, Modbus RTU/TCP Master, Ethernet, USB (back)
Power supply	90 to 250 V AC, 24 V AC/DC	90 to 250 V AC, 24 V AC/DC
Protection class	IP65/NEMA4 (front)	IP65/NEMA4 (front)
Dimensions (W x H x D) in mm (in)	144 x 144 x 158 (5,67 x 5,67 x 6,22)	190 x 144 x 158 (7,48 x 5,67 x 6,22)
FDA 21 CFR 11 / user administration	–	▪

LINAX DR2000

Videographic recorder with extended basic functions for control cabinet installation.

CUSTOMER BENEFIT

- Inexpensive videographic recorder for basic applications
- Very distinct, high-quality TFT display
- Device can be equipped and extended according to customer requirements
- Device protection IP65 / NEMA4 device protection (front)
- Fast scanning of 100ms/channel
- Low operating costs (TCO)

TECHNICAL DATA

Numberof channels:	0, 4, 8 or 12
Display:	14.5 cm (5.7 inch) TFT colour
Operation:	Navigator, keyboard, mouse
Memory:	Internal memory + SD card + USB stick
Communication:	Modbus RTU Slave, Modbus TCP Slave
Transmitter power supply:	1 x 24 V DC, max. 250 mA
H x W x D:	144 x 144 x 158 mm

LINAX DR3000

High-performance videographic recorder for control cabinet installation.

CUSTOMER BENEFIT

- Powerful videographic recorder with high performance
- Simple intuitive operation, with built-in Help
- Up to 12 mathematics channels for complex calculations
- For applications in rough environment due to IP65 / NEMA4 device protection (front)
- Data security in accordance with FDA 21 CFR Part 11
- Guaranteed data integrity (flash memory)
- Low operating costs (TCO)

TECHNICAL DATA

Numberof channels:	4, 8, 12, 16, 20 universal inputs or up to 40 for fieldbus
Display:	17.8 cm (7 inch) TFT
Operation:	Navigator, touchscreen, keyboard, mouse
Memory:	Internal memory + SD card + USB stick
Communication:	Modbus RTU / TCP Slave, Modbus RTU / TCP Master,Profibus DP Slave, PROFINET IO-Device, EtherNet / IP
Transmitter power supply:	1 x 24 V DC, max. 250 mA
Optional:	Batch and tele-alarm function
H x W x D:	190 x 144 x 158 mm

SMARTCOLLECT

- Easy data communication via Modbus RTU / TCP, ECL and SmartControl-Direct
- Connection also via OPC
- Devices of Camille Bauer and Gossen Metrawatt are already predefined and selectable in the software
- Open for the devices of all manufacturers
- Data is stored in an open SQL database
- Modular cost / performance model – basic version may be extended at any time

APPLICATION

The powerful SMARTCOLLECT software has been particularly designed for applications in energy business and industry as well as for service providers and public authorities. The software measures, stores and visualises all of the relevant consumption data of current, gas, water or heat. This results in the following benefits:

TRANSPARENCY

Overall energy consumption view of the acquired media as well as the allocation to individual consumers.

RECOGNITION OF WEAK POINTS

The comprehensive visualisation and reporting functions recognise and show weak points.

OPTIMISATION

Proposals for improvement measures may be evaluated on basis of recognised weak points.

COST REDUCTION

The identification and realisation of recognised saving potentials reduce costs.

USER-FRIENDLY AND FLEXIBLE

SMARTCOLLECT is very easily installed on computers with current Windows operating systems. The free-of-charge SQL Express is used as a database.
The clear hierarchical structure and easy menu guidance with integrated help functions of the Graphic User Interfaces facilitate an intuitive operation after a brief familiarisation period. Well-arranged visualisation contributes to user friendliness.

MODULAR DESIGN - LOW COSTS

The modularly designed software and licence model facilitates easy system expansion and may be adapted to your individual requirements.

VERSATILE USE

SMARTCOLLECT facilitates the flexible acquisition, storage and visualisation of all energy data (e.g. electrical energy) as well as different material flows like gas, steam, water through to heat quantities. Via the Modbus interface, not only Camille Bauer and Gossen Metrawatt products but also instruments of the most varied manufacturers may be connected.

COMPETENT SUPPORT

Camille Bauer supports you with a comprehensive service offer from training programs, consultation services through to its customer support which is available world-wide.

INFORMATION - WORLD-WIDE

SMARTCOLLECT Client facilitates local or world-wide access to the data archived in the SMARTCOLLECT database. The web access allows for working in any locations at any time. The software is multilingual (DE, EN, FR, IT, ES, NL, CZ and CN). The language is very easily switched during operation.

For more information see page 130.

SIGNAL ADJUSTMENT

The more complex a process is designed, the more important are precise instruments for its continuous progression: They assume and secure the flow of information within the system. Instruments of Camille Bauer are successfully used for these technological management tasks in numerous industries.

TEMPERATURE

Temperature is the most frequently measured variable in process industry. Respective sensors are used in accordance with requirements, mostly thermocouples or resistance thermometers. For further processing, this sensor data is reliably converted by our signal converters into standard signal or to a fieldbus.

SIGNAL CONVERSION

The safety and availability of a process plant take first place in the considerations of plant operators. In order to transfer the signals in a safe manner and free of any disturbance they often have to be amplified, galvanically isolated between the individual circuits and possibly adapted to requirements. This effectively prevents potential transfer – people and plant are protected in an optimum fashion.

PROCESS MANAGEMENT

Process management systems assume the visualisation, recording and management of process data. These systems have intelligent control functions and form the interface of analog signals as well as bus systems to the next higher-ranking control level.

PASSIVE SIGNAL CONVERTERS

V608	V610	V611	VS30	TI816	2I1
Programmable temperature transmitter	Temperature transmitter for Pt100	Programmable temperature transmitter	Programmable temperature transmitter	Passive signal isolator	Passive signal isolator
RTD TC → 4...20mA	Pt100 → 4...20mA	RTD TC → mA	Pt100 Ni100 → mA	0...20mA → 0...20mA 0...10V	0...20mA → 0...20mA
01 - 53	01 - 53	01 - 54	01 - 54	01 - 55	01 - 55

DCM817	TI801	TI802	TI807	SI815
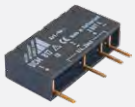				
Passive signal isolator module	Passive signal isolator, loop-powered	Passive signal isolator, 2-channel, loop-powered	One or multichannel passive isolator	Loop-powered supply unit with HART protocol
0...20mA → 0...20mA 0...10V	4...20mA → 4...20mA	4...20mA → 4...20mA 4...20mA → 4...20mA	0...20mA → 0...20mA 0...10V	4...20V → 4...20V
01 - 56	01 - 56	01 - 56	01 - 57	01 - 57

LEGENDE

- Devices without galvanic isolation
- Devices with galvanic isolation
- Compatible with CB-Power-Bus

ACTIVE SIGNAL CONVERTERS

VS40	VS46	VS50	VS52	VS54	VS70
Pt100 converter	Thermocouple converter with alarm unit	Galvanic isolator/ analog converter	Isolating amplifier with transmitter supply	Current shunt / V-I converter	Power supply for the CB-Power-Bus
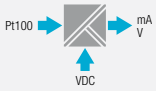	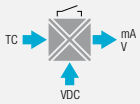	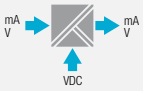	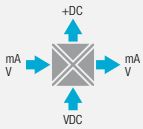	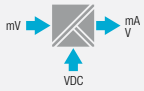	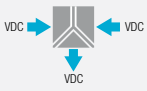
01 - 58	01 - 58	01 - 59	01 - 59	01 - 60	01 - 60

V620	TV815	TV804	TP619	TVD825	TV819
Universal converter / isolating amplifier	DC current-voltage isolating amplifier	DC current isolating amplifier	Potentiometric to DC isolating amplifier	DC duplicator / isolating amplifier	Isolation amplifier
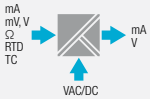	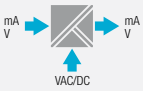	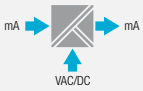	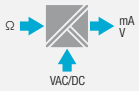	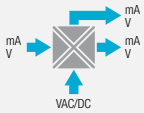	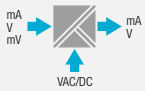
01 - 61	01 - 61	01 - 62	01 - 62	01 - 63	01 - 63

B811	B812	TV808
	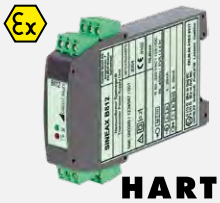	
Power supply unit with add. functions	Standard power supply unit	Configurable isolation amplifier
	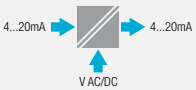	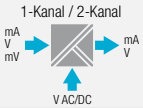
01 - 64	01 - 64	01 - 65

MULTIFUNCTIONAL SIGNAL CONVERTERS

V624	TV809	V604s	VB604s	VC604s	VQ604s
Programmable temperature transmitter	Programmable isolation amplifier	Programmable multifunctional transmitter	Programmable multifunctional transmitter with REMOTE I/O functionality	Programmable safety value converter	Programmable multifunctional transmitter with very fast setting times
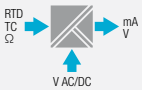		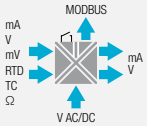	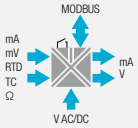	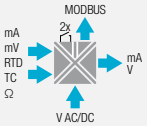	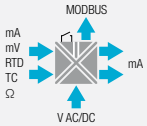
01 - 66	01 - 67	01 - 69	01 - 70	01 - 71	01 - 72

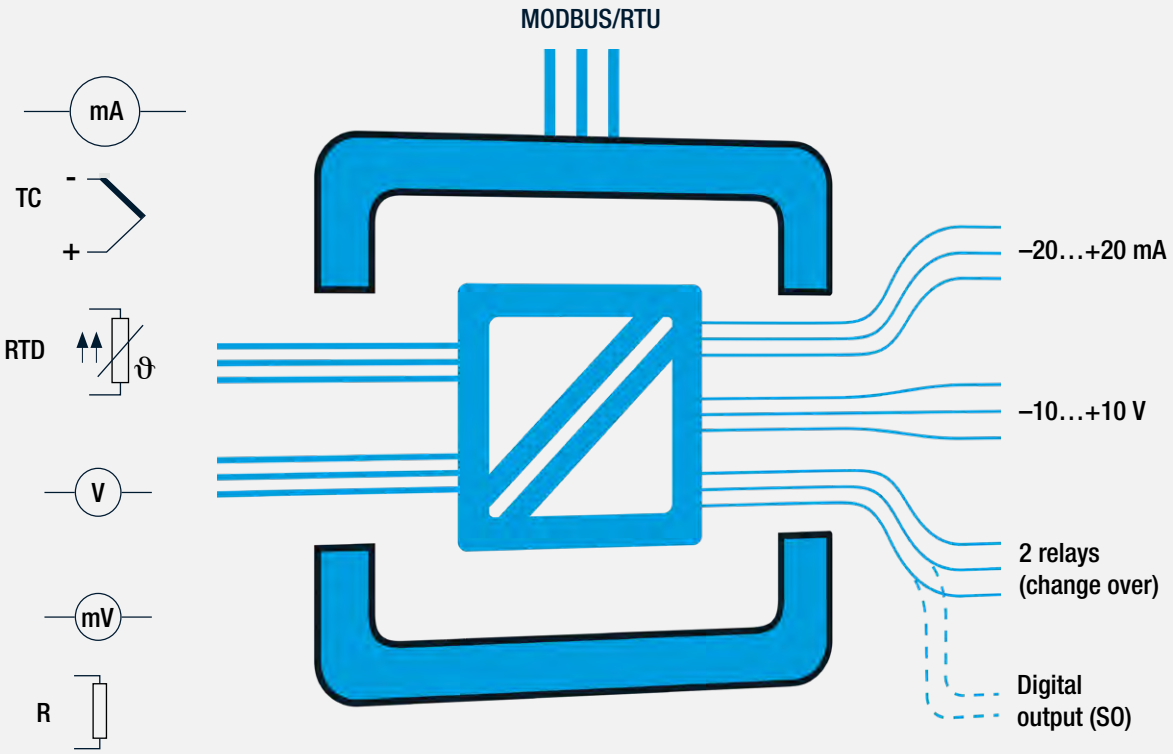

SINEAX V608

Programmable temperature transmitter for top-hat or G-rail assembly, 2-wire - Ex and Non-Ex-design.

CUSTOMER BENEFIT

- Programmable even without power supply connection
- Applications in hazardous areas (Zone 1)
- Reverse polarity protected connections
- Sensor breakage and short-circuit monitoring

TECHNICAL DATA

Input:	Pt100, Ni100 as well as other sensor types in 2, 3 or 4-wire connection Thermocouples type B, E, J, K, L, N, R, S, T, U, W5Re/W26Re, W3Re/W25Re
Output:	4…20 mA, 12…30 V
H x W x D:	62 x 17 x 67 mm (incl. top-hat rail) 62 x 17 x 72 mm (incl. G-rail)

ACCESSORIES

Configuration software see Page 76,
PC connecting cable see Page 73

STOCK VARIANTS

Article No.	Description
141 515	Non-Ex design, internal cold junction compensation
141 523	Ex design EEx ia IIC T6, internal cold junction compensation

SINEAX V610

Temperature transmitter for Pt100 for top-hat or G-rail assembly, 2-wire.

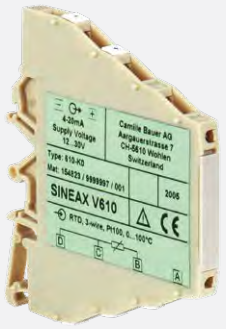

CUSTOMER BENEFIT

- Sensor breakage and short-circuit monitoring
- Narrow design
- Serial mounting without any liwithation
- Reverse polarity protected connections

TECHNICAL DATA

Input:	Pt100 in 3-wire connection
Output:	4…20 mA, 12…30 V
H x W x D:	90.2 x 7 x 86 mm (incl. top-hat rail) 90.2 x 7 x 91 mm (incl. G-rail)

STOCK VARIANTS

Article No.	Description
154 823	0…100 °C
154 831	0…150 °C
154 849	0…200 °C
154 857	-30…+70 °C
154 865	-50…+150 °C

SINEAX V611

Programmable temperature transmitter for top-hat or G-rail assembly, 2-wire.

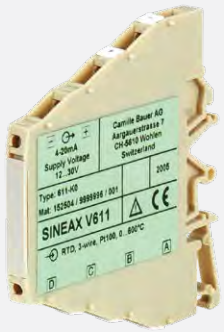

CUSTOMER BENEFIT

- Narrow design
- Serial mounting without any liwithation
- Programmable even without power supply connection
- Sensor breakage and short-circuit monitoring

TECHNICAL DATA

Input:	Pt100, Ni100 as well as other sensor types in 2, 3 or 4-wire connection Thermocouples type B, E, J, K, L, N, R, S, T, U, W5Re/W26Re, W3Re/W25Re
Output:	4…20 mA, 12…30 V
H x W x D:	90.2 x 7 x 86 mm (incl. top-hat rail) 90.2 x 7 x 91 mm (incl. G-rail)

ACCESSORIES

Configuration software see Page 76,
PC connecting cable see Page 73

STOCK VARIANTS

Article No.	Description
152 504	Internal cold junction compensation

SINEAX VS30

Pt100, Ni100 / loop powered converter for toprail assembly.

CUSTOMER BENEFIT

- Spring-cage clamp connection
- Compact design, width only 6.2 mm
- Accuracy 0.1%
- Programming via DIP-switch or software

TECHNICAL DATA

Input:	Pt100 (–200...+ 650 °C), Ni100 (–60...+ 250 °C)
Output:	4...20 mA or 20...4 mA
Power supply:	5...30 V DC (2 wire connection)
H x W x D:	93.1 x 6.2 x 102.5 mm (incl. top-hat rail)

STOCK VARIANTS

Article No.	Description
162 769	SINEAX VS30

SINEAX TI816

Passive signal isolator for the galvanic isolation of 0...20 mA signals, test voltage 500 V.

CUSTOMER BENEFIT

- Current or voltage output for standard signals
- Compact design
- High degree of accuracy

TECHNICAL DATA

Input:	0…20 mA
Output:	0…20 mA, 0…10 V
Test voltage:	500 V
Voltage drop:	2.1 V
H x W x D:	75 x 12.5 x 49.5 mm (incl. top-hat rail) 75 x 12.5 x 52 mm (incl. G-rail)

STOCK VARIANTS

Article No.	Description
990 722	Output 0...20 mA
994 089	Output 0...10 V

SINEAX 2I1

Passive signal isolator for the galvanic isolation of 0...20 mA signals, test voltage 4 kV - Ex design and Non-Ex design.

CUSTOMER BENEFIT

- Isolates signals for hazardous areas
- Robust, tried and tested design
- Exact representation of the current signal

TECHNICAL DATA

Input:	0…20 mA
Output:	0…20 mA
Test voltage:	4 kV
Voltage drop:	3 V (Non-Ex design), 6 V (Ex design)
H x W x D:	95 x 24 x 69.5 mm (incl. top-hat rail) 95 x 24 x 74 mm (incl. G-rail)

STOCK VARIANTS

Article No.	Description
154 253	Non-Ex design
154 279	Input: 0...20 mA Ex design [EEx ib] IIC
154 287	Output: 0...20 mA Ex design [EEx ia] IIC
154 261	Increased weathering resistance

DCM 817

Passive signal isolator module for the galvanic isolation of 0…20 mA signals.

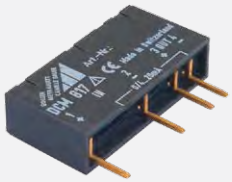

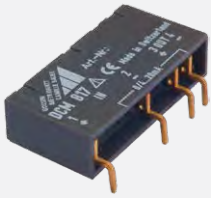

CUSTOMER BENEFIT

- Exact representation of the current signal
- Plug-in or solderable module design
- Space-saving design

TECHNICAL DATA

Input:	0…20 mA
Output:	0…20 mA
Test voltage:	500 V
Voltage drop:	2.1 V
H x W x D:	21 x 41 x 10.3 mm

STOCK VARIANTS

Article No.	Description
988 727	Straight connecting pins
988 719	Angled connecting pins

SINEAX TI801/TI802

Passive Isolator, loop-powered mA to mA.

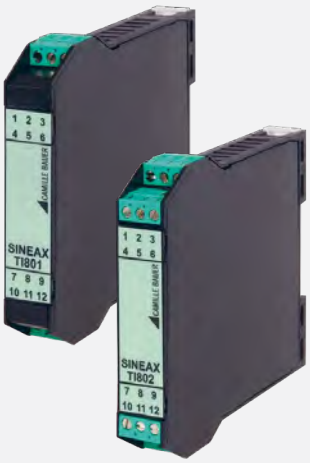

CUSTOMER BENEFIT

- Power supply: self powered from the input (primary) loop
- Channel to channel isolation of 1.5 kV

TECHNICAL DATA

Input:	1 or 2 channels, 4…20 mA
Output:	1 or 2 channels, 4…20 mA
Voltage drop:	max. 7 V (load-dependent)
H x W x D:	100 x 17.5 x 112 mm

STOCK VARIANTS

Article No.	Description
162 884	SINEAX TI801 (1 channel)
162 892	SINEAX TI802 (2 channels)

SINEAX TI807

Passive signal isolator module for the galvanic isolation of 0…20 mA signals, test voltage 4 kV - Non-Ex design.

N17

CUSTOMER BENEFIT

- Current or voltage output for standard signals
- High degree of accuracy
- Isolates signals for hazardous areas
- Up to 3 channels on a width of 17.5 mm

TECHNICAL DATA

Input:	0…20 mA
Output:	0…20 mA, 0…10 V
Test voltage:	4 kV
H x W x D:	120 x 17.5 x 146.5 mm (N17 housing)

STOCK VARIANTS

Article No.	Housing	Description
999 154	N17	1 channel, input: 0…20 mA, output: 0…20 mA, Non-Ex design

SINEAX SI815

Loop powered supply unit with HART protocol to energise 2-wire transmitters - Ex design and Non-Ex design.

N17

CUSTOMER BENEFIT

- No power supply connection required
- HART pass-through
- 1:1 transmission of the 4…20 mA signal
- Suitable for the supply of transmitters in Ex areas

TECHNICAL DATA

Input:	4…20 mA, voltage 12…30 V DC
Output:	4…20 mA Supply voltage = input voltage – voltage drop
Voltage drop:	2.7 V (without HART and Ex) up to 8.7 V (with HART and Ex)
H x W x D:	84.5 x 17.5 x 107.1 mm (N17 housing)

STOCK VARIANTS

Article No.	Description
999 279	Without HART, Non-Ex design
999 295	With HART, Non-Ex design
999 310	Without HART, Ex design [EEx ia] IIC
999 336	With HART, Ex design [EEx ia] IIC

SINEAX VS40

Pt100 converter for toprail assembly.

Compatible with CB-Power-Bus

CUSTOMER BENEFIT

- 3-way galvanic isolation
- Spring-cage clamp connection
- Power bridging terminal DIN rail bus connector
- Compact design, width only 6.2mm
- Minimal range: 50 °C
- Accuracy 0.1%

TECHNICAL DATA

Input:	Pt100 (2-, 3-, 4 wire) (–150…650 °C)
Output:	current 0/4…20 or 20…4/0 mA or voltage 0…5/10, 10…0, 1...5 V DC
Test voltage:	1.5 kV
H x W x D:	93.1 x 6.2 x 102.5 mm (incl. top-hat rail)

STOCK VARIANTS

Article No.	Description
162 751	SINEAX VS40

SINEAX VS46

Thermocouple converter with alarm unit for toprail assembly.

Compatible with CB-Power-Bus

CUSTOMER BENEFIT

- 3-way galvanic isolation
- Spring-cage clamp connection
- Power bridging terminal DIN rail bus connector
- Small dimensions
- Accuracy 0.1%

TECHNICAL DATA

Input:	Thermocouples, types: J, K, E, N, S, R, B, T
Output:	current 0/4…20, 20…4/0 mA or voltage 0…5/10, 10…0 and 1…5 V DC, Solid State Relay for alarm output
Test voltage:	1.5 kV
H x W x D:	93.1 x 6.2 x 102.5 mm (incl. top-hat rail)

STOCK VARIANTS

Article No.	Description
162 777	SINEAX VS46

SINEAX VS50

Galvanic isolator/analog converter for toprail assembly.

CUSTOMER BENEFIT

- 3-way galvanic isolation
- Spring-cage clamp connection
- Power bridging terminal DIN rail bus connector
- Compact design, width only 6.2mm
- Accuracy 0.1%

TECHNICAL DATA

Input:	Current 0/4...20 mA or Voltage 0/1...5, 0/2...10, 0...15/30 V DC
Output:	Current 0/4...20, 20...4/0 mA or Voltage 0/1...5, 0/2...10 V DC
Test voltage:	1.5 kV
H x W x D:	93.1 x 6.2 x 102.5 mm (incl. top-hat rail)

Compatible with CB-Power-Bus

STOCK VARIANTS

Article No.	Description
162 785	SINEAX VS50

SINEAX VS52

Isolating amplifier with transmitter supply for toprail assembly.

CUSTOMER BENEFIT

- 3-way galvanic isolation
- Spring-cage clamp connection
- Power bridging terminal DIN rail bus connector
- Compact design, width only 6.2mm
- Accuracy 0.1%
- With power supply for 2-wire transmitter

TECHNICAL DATA

Input:	Current 0/4...20 mA or voltage 0/1...5, 0/2...10 V DC
Output:	Current 0/4...20, 20...4/0 mA or voltage 0/1...5, 0/2...10 V DC
Test voltage:	1500 V
H x W x D:	93.1 x 6.2 x 102.5 mm (incl. top-hat rail)

Compatible with CB-Power-Bus

STOCK VARIANTS

Article No.	Description
162 793	SINEAX VS52

SINEAX VS54

Current shunt/V-I converter for toprail assembly.

CUSTOMER BENEFIT

- 3-way galvanic isolation
- Spring-cage clamp connection
- Power bridging terminal DIN rail bus connector
- Compact design, width only 6.2mm
- Accuracy 0.1%

TECHNICAL DATA

Input:	± 25 to ± 2000 mV
Output:	Current 0/4...20, 20...4/0 mA or Voltage 0...5/10, 10...0 and 1...5 V DC
Test voltage:	1.5 kV
H x W x D:	93.1 x 6.2 x 102.5 mm (incl. top-hat rail)

Compatible with CB-Power-Bus

STOCK VARIANTS

Article No.	Description
162 800	SINEAX VS54

SINEAX VS70

Power supply for the CB-Power-Bus

CUSTOMER BENEFIT

- Bridging power supply through the DIN rail bus connector (CB-Power-Bus)
- Redundant power supply
- Built-in over-voltage (surge) protection
- Supply of up to 75 modules
- Two individual power supply sources can be connected to one SINEAX VS70 module
- Spring cage clamp connection

TECHNICAL DATA

H x W x D:	93.1 x 6.2 x 102.5 mm (incl. top-hat rail)

Compatible with CB-Power-Bus

STOCK VARIANTS

Article No.	Description
162 818	SINEAX VS70

SINEAX V620

Universal converter for mA, V, TC, RTD, Ω.

CUSTOMER BENEFIT

- Isolation: 1500 V AC at 3 ways
- Strobe: Input (control analog output)
- Resolution: Programmable from 11 to 15 bit + sign
- Programmable DIP switch or software

TECHNICAL DATA

Input:	Voltage, current, RTD, TC, NTC, potentiometer, rheostat
Output:	Current 2 ranges 0/4…20 mA Voltage 4 ranges 0/1…5 V, 0/2…10 V
Test voltage:	1.5 kV
Accuracy:	0.1%
Response time:	35 ms (11 bit + sign)
Power supply:	9...40 V DC, 19...28 V AC
H x W x D:	100 x 17.5 x 112 mm

STOCK VARIANTS

Article No.	Description
176 405	SINEAX V620, power supply 9...40 V DC, 19...28 V AC (50...60 Hz)

SINEAX TV815

DC current-voltage isolating amplifier.

CUSTOMER BENEFIT

- 3-way galvanic isolation
- Power for 2-wire transducers, 20 V DC

TECHNICAL DATA

Input:	Current bipolar setable up to 20 mA or voltage
Output:	Current or voltage
Test voltage:	1.5 kV
Response time:	35 ms
Power supply:	9...40 V DC, 19...28 V AC
H x W x D:	100 x 17.5 x 112 mm

STOCK VARIANTS

Article No.	Description
172 677	SINEAX TV815

SINEAX TV804

DC current isolating amplifier.

CUSTOMER BENEFIT

- 3-way galvanic isolation
- Power for 2-wire transducers, 20 V DC

TECHNICAL DATA

Input:	Current (active or passive)
Output:	Current (active or passive)
Test voltage:	500 V
Response time:	40 ms
Power supply:	9...40 V DC, 19...28 V AC
H x W x D:	100 x 17.5 x 112 mm

STOCK VARIANTS

Article No.	Description
162 868	SINEAX TV804

SINEAX TP619

Potentiometric to DC isolating amplifier.

CUSTOMER BENEFIT

- 3-way galvanic isolation
- Screw-fit terminals (removable)

TECHNICAL DATA

Input:	Resistor, rheostat, potentiometer
Output:	Current or voltage
Test voltage:	500 V
Accuracy:	0.2%
Power supply:	19...40 V DC, 19...28 V AC
H x W x D:	100 x 17.5 x 112 mm

STOCK VARIANTS

Article No.	Description
162 876	SINEAX TP619

SINEAX TVD825

DC duplicator/isolating amplifier (current / voltage).

CUSTOMER BENEFIT

- 3-way galvanic isolation
- Screw-fit terminals removable

TECHNICAL DATA

Input:	Current or voltage
Output:	Current or voltage selectable
Testvoltage:	1.5 kV
Accuracy:	0.2%
Power supply:	19...40 V DC, 19...28 V AC
H x W x D:	100 x 17.5 x 112 mm

STOCK VARIANTS

Article No.	Description
172 685	SINEAX TVD825

SINEAX TV819

Isolation amplifier for unipolar and bipolar DC currents and voltages.

CUSTOMER BENEFIT

- Standard and non-standard signals
- Safe isolation, enhanced up to 600 V (Cat. II) or 1000 V (Cat. I)
- Manual zero and span calibration

TECHNICAL DATA

Input:	–0.1…+0.1 mA to –40…+40 mA, –0.06…+0.06 V to –1000…+1000 V
Output:	–1…+1 mA to –20…+20 mA, –1…+1 V to –10…+10 V
Power supply:	24…60 V AC/DC or 85…230 V AC/DC
H x W x D:	69.2 x 17.5 x 114 mm (terminals not pluggable) 85 x 17.5 x 114 mm (terminals pluggable)

STOCK VARIANTS

Article No.	Description
146 862	Power supply 85…230 V AC/DC, terminals pluggable
146 854	Power supply 24…60 V AC/DC, terminals pluggable
146 846	Power supply 85…230 V AC/DC, terminals not pluggable
146 838	Power supply 24…60 V AC/DC, terminals not pluggable

SINEAX B811

Power supply unit with additional functions to energise 2-wire transmitters - Ex design and Non-Ex design.

CUSTOMER BENEFIT

- HART pass-through
- Current or voltage output for standard signals and non-standard signals
- Suitable for the supply of transmitters in hazardous areas
- Line breakage and short-circuit monitoring via output signal or LED as well as relay

TECHNICAL DATA

Input circuit:	4…20 mA, supply voltage (20 mA): 24 V (Non-Ex design), 16 V (Ex design)
Output:	0…5 V, 1…5 V, 0…10 V, 1…10 V or non-standard signals 0…20 mA, 4…20 mA or non-standard signals
Power supply:	24…60 V AC/DC or 85…230 V AC/DC
H x W x D:	120 x 17.5 x 146.5 mm

SINEAX B812

Standard power supply unit to energise 2-wire transmitters - Ex design and Non-Ex design.

CUSTOMER BENEFIT

- HART pass-through
- Suitable for the supply of transmitters in hazardous areas
- Line monitoring via LED
- Setting time <0.3 ms

TECHNICAL DATA

Input circuit:	4…20 mA, supply voltage (20 mA): 18 V
Output:	4…20 mA
Power supply:	24…60 V AC/DC or 85…230 V AC/DC
H x W x D:	69.2 x 17.5 x 114 mm (terminals not pluggable) 85 x 17.5 x 114 mm (terminals pluggable)

STOCK VARIANTS

Article No.	Description
155 102	Power supply: 85…110 V DC/230 V AC, Ex design [Ex ia Ga] IIC and [Ex ia Da] IIIC, terminals not pluggable
155 144	Power supply: 85…110 V DC/230 V AC, Ex design [Ex ia Ga] IIC and [Ex ia Da] IIIC, terminals pluggable
155 095	Power supply: 24…60 V AC/DC, Ex design [Ex ia Ga] IIC and [Ex ia Da] IIIC, terminals not pluggable
155 136	Power supply: 24…60 V AC/DC, Ex design [Ex ia Ga] IIC and [Ex ia Da] IIIC, terminals pluggable
155 087	Power supply: 85…230 V AC/DC, Non-Ex design, terminals not pluggable
155 128	Power supply: 85…230 V AC/DC, Non-Ex design, terminals pluggable
155 079	Power supply: 24…60 V AC/DC, Non-Ex design, terminals not pluggable
155 110	Power supply: 24…60 V AC/DC, Non-Ex design, terminals pluggable

SINEAX TV808-12

2-channel isolation amplifier for unipolar and bipolar DC currents and voltages.

CUSTOMER BENEFIT

- 2 isolated channels or 1 input/2 outputs in 17.5 mm design width
- Manual zero and span calibration
- 252 I/O combinations with solder bridges configurable or customised measuring range

TECHNICAL DATA

Input:	Different ranges from 0.06 V to 20 V or 0.1 mA to 20 mA or customised
Output:	0…20 mA, 4…20 mA, ±20 mA mA or customised
Power supply:	24…60 V AC/DC or 85…230 V AC/DC
H x W x D:	120 x 17.5 x 146.5 mm

SINEAX V624

Programmable temperature transmitter for thermocouples and resistance thermometers - Ex design and Non-Ex design.

CUSTOMER BENEFIT

- Programmable without any power supply connection
- Zero and span calibration via software
- Suitable for temperature measurement in hazardous areas
- Sensor breakage and short-circuit monitoring

TECHNICAL DATA

Input:	Pt100, Ni100 in 2, 3 or 4-wire connection, Thermocouples type B, E, J, K, L, N, R, S, T, U, W5Re/W26Re, W3Re/W25Re
Output:	Programmable between 0…20 mA or 20…0 mA or 0…10 V or 10…0 V
Power supply:	24…60 V AC/DC or 85…230 V AC/DC
H x W x D:	69.2 x 17.5 x 114 mm (terminals not pluggable) 85 x 17.5 x 114 mm (terminals pluggable)

ACCESSORIES

Configuration software see Page 76,
PC connecting cable see Page 73

STOCK VARIANTS

Article No.	Description
141 896	Power supply 24…60 V AC/DC, Non-Ex design, terminals not pluggable
141 903	Power supply 85…230 V AC/DC, Non-Ex design, terminals not pluggable
143 412	Power supply 24…60 V AC/DC, Non-Ex design, terminals pluggable
143 420	Power supply 85…230 V AC/DC, Non-Ex design, terminals pluggable
141 911	Power supply 24…60 V AC/DC, Ex design [Ex ia Ga] IIC and [Ex ia Da] IIIC, terminals not pluggable
141 929	Power supply 85…230 V AC/DC, Ex design [Ex ia Ga] IIC and [Ex ia Da] IIIC, terminals not pluggable
143 438	Power supply 24…60 V AC/DC, Ex design [Ex ia Ga] IIC and [Ex ia Da] IIIC, terminals pluggable
143 446	Power supply 85…230 V AC/DC, Ex design [Ex ia Ga] IIC and [Ex ia Da] IIIC, terminals pluggable

SINEAX TV809

Programmable isolation amplifier for unipolar and bipolar DC currents and voltages - Ex design and Non-Ex design.

CUSTOMER BENEFIT

- Current or voltage output in one device
- Safe isolation, enhanced up to 600 V (Cat. II) or 1000 V (Cat. I)
- Limit value relay secures monitoring function
- Intrinsically safe input for signals from hazardous areas

TECHNICAL DATA

Current input:	–1.5…+1.5 mA to –100…+100 mA
Voltage input:	–1.7…+1.7 V to –1000…+1000 V
Current output:	–0.5…+0.5 mA to –20…+20 mA
Voltage output:	–0.5…+0.5 V to –10…+10 V
Relay output:	AC: 250 V, 2 A, 500 VA, DC: 125 V, 2 A, max. 60 W
Power supply:	24…60 V AC/DC or 85…230 V AC/DC
H x W x D:	69.2 x 17.5 x 114 mm (terminals not pluggable) 85 x 17.5 x 114 mm (terminals pluggable)

ACCESSORIES

Configuration software see page 76,
PC connecting cable see page 73

STOCK VARIANTS

Article No.	Description
147 282	Power supply 85…230 V, terminals pluggable, Non-Ex design
147 258	Power supply 24…60 V, terminals not pluggable, Non-Ex design
147 266	Power supply 85…230 V, terminals not pluggable, Non-Ex design

SINEAX V604s

Signal converter of the premium class.

SINEAX V604s is a high-performance multifunctional signal converter with a very high basic accuracy of 0.1 %.

However, SINEAX V604s is more than a simple isolation amplifier or temperature transmitter.

The instrument may be adapted to the most varied measuring tasks via the MODBUS/RTU interface integrated as a standard and the CB-Manager software available free-of-charge.

This multifunctionality in combination with very easy operation results in a wide range of applications of classical tasks, e.g. temperature measurement or signal isolation through to intelligent monitoring tasks aligned to safety.

SINEAX V604S IS CHARACTERISED BY THE FOLLOWING FEATURES:

- Sensor connection without any external jumpers
- High-quality pluggable screw terminals or spring cage terminal
- 2 analog inputs and 2 analog outputs
- 2 relay outputs *
- Digital output (S0) *
- Digital MODBUS/RTU interface for parameterising and system integration
- Integrated mathematical functions
- Functions for safety-aligned measurements
- Integrated DC energy meter *
- Customised linearisation
- Numerous liwith value monitoring and alarms
- AC/DC wide-range power supply unit

* Depending on the type of instrument

	THE UNIVERSAL INSTRUMENT	THE BIDIRECTIONAL INSTRUMENT	THE MONITORING INSTRUMENT	THE FAST INSTRUMENT
	V604s	VB604s	VC604s	VQ604s
2 universal inputs (mA, mV, Ω, temperature)		▪	▪	▪
Galvanic isolationof all circuits	▪	▪	▪	▪
AC/DC wide-range power supply unit (24-230V)	▪	▪	▪	▪
Fast measurement up to 10 ms	–	–	–	▪
Number of analog outputs (mA, V)	2	2	1	2
Relay output / digital output	1 normally open (NO) or digital output	1 normally open (NO)	2 change over	1 normally open (NO)
Remote I/O functionality	–	▪	–	–
Design for 600 VDC -600…+600 VDC at one output	▪	–	–	–
High-quality pluggable screw terminals or spring cage terminal	▪	▪	▪	▪
Output signal (selectable for each output separately)	U or I	U or I	U or I	I
Mathematical linking of inputs	▪	▪	▪	▪
DC-energy meter	▪	▪	–	–
Sensor drift monitoring	▪	▪	▪	▪
Breakage and short circuit monitoring	▪	▪	▪	▪
Sensor redundancy	▪	▪	▪	▪
MODBUS interface	▪	▪	▪	▪

SINEAX V604s

Programmable multifunctional transmitter for currents, voltages, temperature sensors, remote transducers or potentiometers.

CUSTOMER BENEFIT

- Measurement of DC voltage, DC current, temperature (RTD, TC) and resistance
- System capability: Parameterising and readout of all input variables and internally calculated values via MODBUS
- Sensor connection without any external jumpers
- 2 inputs (e.g. for sensor redundancy or difference formation)
- 2 outputs (U and / or I)
- DC- energy meter - function (with S0 output)
- 2 inputs can be linked with each other and allocated to the 2 outputs which enables calculations and sensor monitoring (e.g. prognostic maintenance of sensors)
- Freely programmable relay, e.g. for liwith or alarm signalling
- Digital output (optional)
- AC/DC wide-range power supply unit
- Pluggable high-quality screw or spring cage terminals

All settings of the instrument can be adapted to the measuring task by PC software. The software also serves visualising, commissioning and service.

TECHNICAL DATA

Input 1 and 2:	Pt100, adjustable Pt20…Pt1000 Ni100, adjustable Ni50…Ni1000 2, 3 or 4 wire connection Thermocouple types B, E, J, K, L, N, R, S, T, U, W5Re/W26Re, W3Re/W25Re –1000…+1000 mV, unipolar/bipolar –600…+600 V, unipolar/bipolar –50…+50 mA, unipolar/bipolar 0…5 kOhm, 2 or 3 wire connection
Output 1 and 2:	±20 mA, uni/bipolar, range adjustable or ±10 V, uni/bipolar, range adjustable
Relay output:	1 normaly open: AC: 2 A / 250 VAC DC: 2 A / 30 VAC
Power supply:	24 …230 V DC, 100…230 V AC, ±15%
H x W x D:	118 x 22.5 x 108 mm (incl. top-hat rail)

ACCESSORIES

Configuration software see page 76,

For connection to a PC a converter from RS485 to USB is required.
E.g. Art. No. 163 189 USB to RS485 converter, see page 74

STOCK VARIANTS

Article No.	Description
168 329	Device versions for high DC voltages: DC voltages of up to 600VDC can be measured at one input. In addition, mV, RTD, TC and resistance measurements are possible at both inputs. At one input mA. The device is supplied with screw terminals and a liwith value relay. The following configuration is preset: Input 1: 0…1000 mV / Input 2: not used Output 1: 4…20 mA / Output 2: not used
169 624	Device version without a high DC input: Contrary to the version for high voltages, mA signals can be processed simultaneously at both inputs of this device version. In addition, mV, RTD, TC and resistance measurements are possible. The device is supplied with screw terminals and a liwith value relay. The following configuration is preset: Input 1: 4…20 mA / Input 2: 4…20 mA Output 1: 4…20 mA / Output 2: 4…20 mA

SINEAX VB604s

Programmable multifunctional transmitter for currents, voltages, temperature sensors, remote transducers or potentiometers.

CUSTOMER BENEFIT

- Measurement of DC voltage, DC current, temperature (RTD, TC) and resistance
- **Programmable remote I/O functionality.** Readout of all input variables and internally calculated values via MODBUS. **Simultaneously, the outputs and the relay may be controlled via MODBUS.**
- **Free selection as to whether the output variables are dependent on the input variables or whether the outputs are controlled independently of the inputs via MODBUS.**
- Sensor connection without any external jumpers
- 2 inputs (e.g. for sensor redundancy or difference formation)
- 2 outputs (U and / or I)
- 2 inputs can be linked with each other and allocated to the 2 outputs which enables calculations and sensor monitoring (e.g. prognostic maintenance of sensors)
- System capability: Communication via Modbus interface
- Freely programmable relay, e.g. for liwith or alarm signalling
- AC/DC wide-range power supply unit
- Pluggable high-quality screw or spring cage terminal

All settings of the instrument can be adapted to the measuring task by PC software.
The software also serves visualising, commissioning and service

TECHNICAL DATA

Input 1 and 2:	Pt100, adjustable Pt20…Pt1000 Ni100, adjustable Ni50…Ni1000 2, 3 or 4 wire connection Thermocouple types B, E, J, K, L, N, R, S, T, U, W5Re/W26Re, W3Re/W25Re –1000…+1000 mV, unipolar/bipolar –50…+50 mA, unipolar/bipolar 0…5 kOhm, 2 or 3 wire connection	
Output 1 and 2:	±20 mA, uni/bipolar, range adjustable or ±10 V, uni/bipolar, range adjustable	
Relay output:	1 normaly open:	AC: 2 A / 250 VAC DC: 2 A / 30 VAC
Power supply:	24 …230 V DC, 100…230 V AC, ±15 %	
H x W x D:	118 x 22.5 x 108 mm (incl. top-hat rail)	

ACCESSORIES

Configuration software see page 76

For connection to a PC a converter from RS485 to USB is required.
E.g. Art. No. 163 189 USB to RS485 converter, see page 74

SINEAX VC604s

Programmable multifunctional transmitter for currents, voltages, temperature sensors, remote transducers or potentiometers.

CUSTOMER BENEFIT

- Measurement of DC voltage, DC current, temperature (RTD, TC) and resistance
- System capability: Parameterising and readout of all input variables and internally calculated values via MODBUS
- Sensor connection without any external jumpers
- 2 inputs (e.g. for sensor redundancy or difference formation)
- 1 output (U or I)
- DC- energy meter - function (with S0 output)
- 2 inputs can be linked with each other and allocated to the 2 outputs which enables calculations and sensor monitoring (e.g. prognostic maintenance of sensors)
- **2 freely programmable relays with changeover contacts, e.g. for liwith or alarm signalling**
- AC/DC wide-range power supply unit
- Pluggable high-quality screw or spring cage terminals

All settings of the instrument can be adapted to the measuring task by PC software. The software also serves visualising, commissioning and service.

TECHNICAL DATA

Input 1 and 2:	Pt100, adjustable Pt20…Pt1000	
	Ni100, adjustable Ni50…Ni1000	
	2, 3 or 4 wire connection	
	Thermocouple types B, E, J, K, L, N, R, S, T, U, W5Re/W26Re, W3Re/W25Re	
	–1000…+1000 mV, unipolar/bipolar	
	–50…+50 mA, unipolar/bipolar	
	0…5 kOhm, 2 or 3 wire connection	
Output 1 and 2:	±20 mA, uni/bipolar, range adjustable or	
	±10 V, uni/bipolar, range adjustable	
Relay output:	2 change over	AC: 2 A / 250 VAC
		DC: 2 A / 30 VAC
Power supply:	24…230 V DC, 100…230 V AC, ±15%	
H x W x D:	118 x 22.5 x 108 mm (incl. top-hat rail)	

ACCESSORIES

Configuration software see page 76

For connection to a PC a converter from RS485 to USB is required.
E.g. Art. No. 163 189 USB to RS485 converter, see page 74

SINEAX VQ604s

Programmable multifunctional transmitter for currents, voltages, temperature sensors, remote transducers or potentiometers.

CUSTOMER BENEFIT

- Fast measurement of DC voltage, DC current, temperature (RTD, TC) and resistance
- System capability: Parameterising and readout of all input variables and internally calculated values via MODBUS
- **Setting time up to 10 ms**
- Sensor connection without any external jumpers
- 2 inputs (e.g. for sensor redundancy or difference formation)
- 2 outputs (I)
- 2 inputs can be linked with each other and allocated to the 2 outputs which enables calculations and sensor monitoring (e.g. prognostic maintenance of sensors).
- Freely programmable relay, e.g. for liwith or alarm signalling
- AC/DC wide-range power supply unit
- Pluggable high-quality screw or spring cage terminals

All settings of the instrument can be adapted to the measuring task by PC software. The software also serves visualising, commissioning and service.

TECHNICAL DATA

Input 1 and 2:	Pt100, adjustable Pt20…Pt1000	
	Ni100, adjustable Ni50…Ni1000	
	2, 3 or 4 wire connection	
	Thermocouple types B, E, J, K, L, N, R, S, T, U, W5Re/W26Re, W3Re/W25Re	
	–1000…+1000 mV, unipolar/bipolar	
	–50…+50 mA, unipolar/bipolar	
	0…5 kOhm, 2 or 3 wire connection	
Output 1 and 2:	±20 mA, uni/bipolar, range adjustable or	
	±10 V, uni/bipolar, range adjustable	
Relay output:	1 normaly open:	AC: 2 A / 250 VAC
		DC: 2 A / 30 VAC
Power supply:	24…230 V DC, 100…230 V AC, ±15%	
H x W x D:	118 x 22.5 x 108 mm (incl. top-hat rail)	

ACCESSORIES

Configuration software see page 76

For connection to a PC a converter from RS485 to USB is required.
E.g. Art. No. 163 189 USB to RS485 converter, see page 74

PROGRAMMING AND ADDITIONAL CABLES

They serve programming of transmitters on a PC if the respective software is available.

Article No.	Description	A2xx * A2000	A200 zu DME4xx	DME4xx A200R	M56x TV809 (NEx)	EDS-CAM	V611	V608 V624	TV809 (Ex)	BT5100 BT5200 BT5300 BT5400
137 887	Programming cable PK610 (Ex)						▪	▪		
141 416	Additional cable							▪		
141 440	Additional cable						▪			
143 587	Additional cable				▪				▪	
147 779	Programming cable PRKAB 600 (Ex)				▪					
147 787	Programming cable PRKAB 560 (NEx)								▪	
152 603	Interface adapter cable	▪								
154 071	Connecting cable Sub-D 9 pol. male/male		▪							
168 949	Connecting cable 2 m EDS-CAM <> SINEAX CAM					▪				
176 314	Programming cable PRKAB 5000									▪
980 179	Extension cable Sub-D 9 pol. male/female	▪		▪						

* A210, A220, A230s, A230 with plugged-on EMMOD201

137 887
147 787
147 779

141 416

CUSTOMER BENEFIT

- Programming of transmitters standardand Ex design
- Communication with the instruments
- Safe galvanic isolation of instrument and PC
- Cost-effective instruments (M56x) due to separated programming interface

141 440

143 587

152 603

154 071

980 179

168 949

SINEAX A20

Universal display device with a large OLED display for front panel mounting.

The digital indicator SINEAX A20 is an universal display device with a large OLED display for front panel mounting. About the two RS485 MODBUS RTU interfaces up to 30 measurement can be visualized.

CUSTOMER BENEFIT

- Two serial RS485 MODBUS RTU master / slave interfaces
- Large OLED 2,7” display with 128 x 64 pixel
- Simple parameterization via 3 keys
- Up to 30 measurement can be visualized
- Reduced cabling (2-wire connection)

CONVERTER FROM USB TO RS485

USB to RS485, with galvanic isolation, for SINEAX V604s, VR660 and A*PLUS*.

USB to RS485, with galvanic isolation, for SINEAX V604s, VB604s, VR660, A*PLUS*, SINEAX CAM and SINEAX DME401/440

Article No.	Description
163 189	USB/RS485 converter

CONVERTER FROM USB TO RS232-TT (CONFIG-BOX PLUS)

USB to RS232, with galvanic isolation.

CONFIG-BOX PLUS is a converter which realies a serial asynchronous connectionvia RS232, RS485 or TTL with a USB port on your PC.

CUSTOMER BENEFIT

- USB/RS232 isolation: 1500 V
- Loop powered by USB PC port
- Dimensions: 90 x 50 x 25 mm
- Standard USB 1.0, 1.1, 2.0

Article No.	Description
172 768	USB/RS232-TTL converter Config-Box Plus

CB-MANAGER

For the universal measuring unit for heavy-current variables SINEAX DM5S/DM5F, SINEAX CAM and A*PLUS* and for the programmable multifunctional transmitter SINEAX V604s.

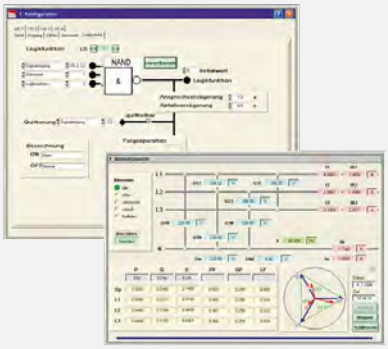

This software perwiths ONLINE/OFFLINE parawitherising of SINEAX CAM and A*PLUS* as well as visualising measured values. It also supports users in commissioning and service. The program design is system-oriented and thus enables the simultaneous communication with several devices.

- Acquisition and change of all device features
- Setting of real-time clock and time zone, selection of the time synchronisation method
- Archiving of configuration and measured value files
- Visualising of instantaneous values
- Acquisition, setting and resetting of meters and minimum / maximum values
- Starting, stopping and resetting of the optional logger
- Recording of measured value progression during commissionning
- Check of correct device connection
- Simulation of outputs to test subsequent circuits
- User and access setting for the protective password system

Article No.	Description
156 027	Doku-CD, incl. configuration software CB-Manager

This CD is part of the scope of delivery of SINEAX CAM, A*PLUS*, SINEAX VR660 and V604s.
It also contains the documentation of the Profibus devices A*PLUS*, EMMOD204 and DME406.

CB-ANALYZER

For the universal heavy-current measuring units SINEAX CAM and A*PLUS*.

The .NET-based software facilitates the data acquisition and analysis of the optional data loggers and lists of SINEAX CAM and A*PLUS*. The data will be stored in a database so that a much longer history is built up than would be the case if only the present memory content of the device was analysed. The program is capable of processing several devices simultaneously.

- Acquisition of logger and list data of several devices
- Storage of the data in a database (Access, SQLClient)
- Report generation in list or graphic format
- Selectable time range in the preparation of reports
- Export of report data to Excel or as an Acrobat PDF file
- Different analysing options of the acquired data, also across devices

Article No.	Description
156 027	Doku-CD, incl. analysis software CB Analyzer

This CD is part of the scope of delivery of SINEAX CAM, A*PLUS*, SINEAX VR660 and V604s.
It also contains the documentation of the Profibus devices A*PLUS*, EMMOD204 and DME406.

CONFIGURATION SOFTWARE

To parameterise programmable CB devices.

All software products of Camille Bauer Metrawatt can be used ONLINE (connected to the device) and OFFLINE (without a connected device). In this way, parameterising and the documentation for all devices to be used can be performed and stored prior to commissioning. The memory stick contains the following PC software:

CONTENT

Software	for devices	Language	Operating system
VC600	SINEAX/EURAX V604, VC603, SIRAX V644	D, E, F, NL	
V600plus	SINEAX VK616, VK626, V608, V624, V611, SIRAX V606	D, E, F, NL, I, S	
TV800plus	SINEAX TV809	D, E, F, NL	
DME 4	SINEAX/EURAX DME4xx	D, E, F, NL, I	9x, NT4.x, 2000, ME, XP Vista, 7, 8 (32-Bit) Vista, 7, 8 (64-Bit)
M560	SINEAX M561, M562, M563	D, N, F, NL, S	
2W2	KINAX 2W2, WT711 and SR719	D, E, F, NL	
A200plus	SINEAX A210, A220, A230, A230s with EMMOD201 or EMMOD203	D, E, F, NL	
A2000plus Handheld	A210-HH, A230-HH	D, E, F, NL	

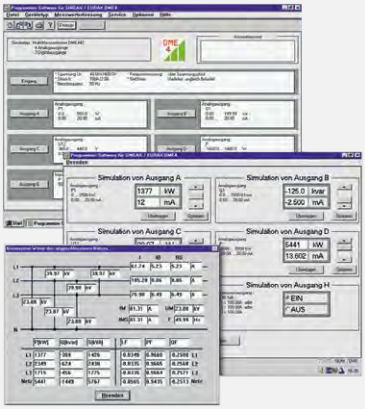

Article No.	Description
146 557	Configuration software (Memory stick)

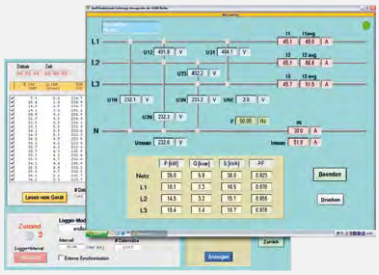

CURRENT TRANSFORMER

Current transformer

SC 30 / SC 40-B / SC 40-C / SC 50-E

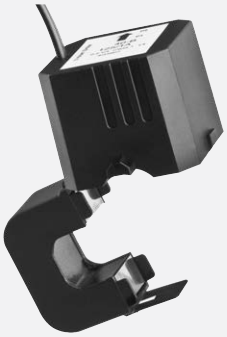

APPLICATION

Current transformers convert high amperage AC current of up to 1000 A (primary current) into small, safe, measurable current of 1 A or 5 A (secondary current). Thanks to their compact design, the split- core current transformers are especially suited for use in areas of restricted access and confined space. The separable core makes it easier to install the transformers on cables or rails.

The split-core current transformers are the right choice when an interruption of the electrical circuit is difficult or a measuring instrument has to be easily and quickly refitted.
The safe installation of the primary lead in the current transformer is guaranteed by the mechanical design and is confirmed by a distinctly audible click sound. Two UV proof cable ties, which are part of the standard equipment, help to fix the transformer additionally.

SIRAX CT100-CT110

APPLICATION

Wound current transformers convert low primary rated currents starting with 1A to galvanically separated secondary rated currents of 5A or 1A which can be used by the measuring system. Compared to bushing or cable type current transformers, wound current transformers have 4 screw connections. The primary as well as the secondary current are connected directly via the screw terminals.
Wound current transformers are particularly suitable to low currents where bushing and cable type current transformers cannot be used anymore.

SIRAX CT200-CT230

APPLICATION

Bushing-type current transformers are used wherever high currents are to be acquired and processed. They are directly placed on the primary conductor (bus bar or conductor) through the opening. The secondary side (usually a measuring device, energy meter or display) is connected by front and rear connecting terminals.

Bushing-type current transformers constitute the most reliable, precise and cost-effective current transformer versions. However, the primary conductor must be disconnected for installation purposes. For this reason, they are more suitable for new facilities.

SIRAX CT300-CT330

APPLICATION

Due to their compact design and easy installation, split-core current transformers are particularly suited to applications involving places hard to access and limited in space. The separable cores also facilitate the installation on cables or bus bars.

Wherever an interruption of the current path is problematic or a measuring device has to be retrofitted in an uncomplicated manner, split-core current transformers are the correct choice. They transform primary rated currents into galvanically isolated secondary currents of 5 A or 1 A that can be used by the measuring system. The secondary side (usually a measuring device, display or control) is connected by terminals.
The design ensures the safe assembly of the primary cable or bus bar in the current transformer which is confirmed by a clearly audible «clicking sound». An additional locking mechanism prevents accidental opening of the separable cores.

More on page 125

POSITION SENSORS

Be it throttle valves of power plants, crane booms under heavy loads, passenger and container ships at sea or directional solar plants: even the smallest changes in inclination may have a substantial effect nearly everywhere in machine construction and the area of transport. On the one hand, on the component concerned and, on the other hand, subsequently on the entire system. Therefore, it is extremely important that these changes be exactly measured to implement immediately required compensation measures.

Angle measurement systems of Camille Bauer Metrawatt can allocate a position of travel or angle to an exact and unambiguous position value at any time. They thus serve as an important link between mechanics and control. They particularly demonstrate their quality in rough conditions.

Environmental impacts do not impair their precision in any way: The tried and tested capacitive system operates according to a non-contact measuring principle and provides the devices with unique operating safety. Depending on application and objective, different OEM variants are available for serial installation in customer systems and special variants for the machine and plant construction industry.

CONTENT

CHAPTER - PAGE	POSITION SENSORS
02 - 79	Overview
02 - 80	Transmitters for angular position
02 - 96	Inclination transmitters
02 - 103	Accessories

CHAPTER - PAGE	SELECTION CRITERIA POSITION SENSORS
02 - 110	Important drive system variables
02 - 111	Selection criteria for shaft couplings

TRANSMITTERS FOR ANGULAR POSITION

are precision instruments and serve for the acquisition of angular position and rotation, processing and the provision of measured values as electric output signals for the downstream device. They convert the angular position of a shaft into a load-independent direct current signal, proportional to the angular position.

KINAX WT720
Page 02 - 82

KINAX HW730
Page 02 - 84

KINAX WT707
Page 02 - 88

KINAX WT717
Page 02 - 90

KINAX 3W2
Page 02 - 92

KINAX 2W2
Page 02 - 94

INCLINATION TRANSMITTERS

convert the angle of inclination of the object to be measured into an output signal. The same is available either analog in form of a current (4 … 20mA) or digital with a bus interface in CANopen, SSI or HART.
The pendulum encoder measuring principle has been tried and tested for a long time and is precise and long-time stable even under the most adverse conditions, e.g. in the presence of vibration.

KINAX N702
Page 02 - 98

KINAX N702-CANopen
Page 02 - 99

KINAX N702-SSI
Page 02 - 100

KINAX N702-INOX
Page 02 - 101

KINAX N702-INOX HART
Page 02 - 102

ACCESSORIES

Appropriate accessories for angular position instrumentation and inclination encoder.

CABLE/PLUG
Page 02 - 103

MOUNTING ACCESSORIES
Page 02 - 104

COUPLINGS
Page 02 - 107

TRANSMITTERS FOR ANGULAR POSITION

Hollow-shaft transmitter for angular position for heavy duty applications.

Positioning tasks have to be solved in all areas of machine and plant construction. Safety demands and requirements continually rise, particularly so if failures endanger people and the environment. Angular position, inclination or position transmitters are used for the exact acquisition and monitoring of positions. The ability of allocating an exact and unambiguous position value to a distance or angular position at any time make angular position transmitters one of the most important links between mechanical components and the control system.
Angular position transmitters acquire the angular position of a shaft and convert the mechanical movement into a proportionate DC signal. They may be divided into two main categories.

Incremental angular position transmitters

An incremental encoder measures angles by counting measuring steps or the interpolation of signal periods always starting from an optional point of reference (zero). A pulse is ewithted for each position step. This measuring method does not provide an absolute allocation of a position to the signal. This means that every time the control is activated or after an interruption of the supply voltage, a point of reference has to be set.

Absolute angular position transmitters

Absolute angular position transmitters provide an unambiguously allocated position immediately after activation or an interruption of the supply voltage. Contrary to incremental angular position transmitters, the time-consuming determination of a point of reference is not required.
The measuring task of an angular position transmitter may be solved by different measuring principles.

Capacitive measuring principle

Capacitive measuring principles are among the best non-contact sensor scanning systems for analog and digital output signals. The principle of an ideal plate capacitor.
The measured value generator consists of two capacitor plates fixed in a housing and facing each other at a short distance. An electric field is generated between the plates and influenced by a flag which can rotate around a central axis fixed on one axis. A spacer ring is arranged between the ewithting and receiving electrode plate and ensures a firm, defined distance of the electrode plates and the flag. The analysis electronics are positioned on the outer side of the capacitor plates where they are supplied with energy via feedthrough filters and read out. Together with the shells of the aluminium housing, these feedthrough filters form an effective protection against external electric fields influencing the angular position transmitter. If the axis is turned in relation to the housing, the capacities of the differential capacitors change in accordance with the angle position of the axis. These changes are acquired by the measuring circuit and correspondingly displayed. The measured value is thus issued as an absolute angle position.

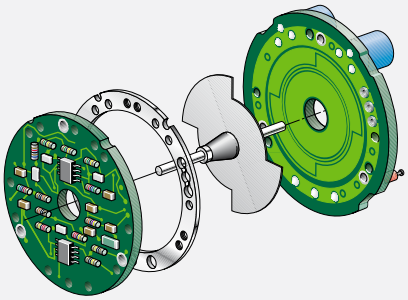

Magnetic measuring principle

Angular position encoders using a magnetic measuring principle consist of a rotatable shaft with a fixed permanent magnet and a sensor. The magnetic field generated by the permanent magnet is scanned by the sensor and the measured value is allocated to an unambiguous, absolute angle position.

Optical measuring principle

Angular position encoders using an optical measuring principle consist of a rotatable shaft with a code disk and an optoelectronic scanning unit composed of an aperture and photoreceivers. Optical information is converted into electrically analysable signals. The system is predominantly liwithed to visible light, infrared radiation and ultraviolet light. The principle is based on the signal change caused by the quantum mechanical properties of light. This means that infrared light of a source penetrates the code disk and the aperture behind it. In each angle step, a different number of photoreceivers is covered due to the dark fields of the code disk.

Single and multiturn angular position encoders

Angular position encoders which issue an absolute position by one revolution of the shaft, i.e. 360°, are called single turn angular position encoders. The entire measuring range has been covered after one revolution and starts again with its initial value. Many applications, e.g. spindles, engine shafts or cables require the acquisition of several revolutions. Multiturn angular position encoders provide in addition to the angle position of the shaft also information on the number of revolutions.

Camille Bauer AG offers a range of sophisticated and high-quality angular position transmitters. For a long time, the company has focussed on the patented capacitive measuring principle. The instruments are characterised by features and advantages which predestine them for heavy-duty operation. The emphasis is always on quality, reliability and robustness.

COMMON APPLICATIONS

Wind and solar energy plants

- Horizontal nacelle alignment to determine the wind direction, monitor the rotor blade position and speed of the rotor
- Exact alignment of solar panels and parabolic mirrors

Guide vanes, throttle valves and slidegates of power plants

- Exact positioning and monitoring of guide vanes, turbine controls, throttle valves and slidegates

Shipping

- Exact determination of rudder and propeller position

Crane vehicles, fork-lift trucks and heavy-duty vehicles

- Exact positioning of crane jibs and the fork of fork-lift trucks
- Precise position measurement in industrial and dockside cranes as well as swivel measurement in heavy-duty vehicles

Dredgers and drilling equipment

- Measurement of suction arm depths in suction dredgers
- Acquisition and positioning of dredger arms and depth measurement in rotary drilling equipment

APPLICATION EXAMPLES

Oil and gas production

Alignment of the drilling head unit in a drilling rig

An offshore drilling rig is a detached steel framework equipped for the exploration of mineral oil or natural gas as well as water sources.

KINAX inclination sensors secure the desired alignment of the drilling unit in relation to the borehole and thus the smooth execution of the drilling operation.

Offshore oil rig in the ocean

KINAX WT720

Programmable shaft transmitter for angular position for heavy duty applications, dia. 58 mm.

Converts the angular position of a shaft into a load independent direct current signal, proportional to the angular shaft position.

MAIN FEATURES

- Robust transmitter for angular position suitable for field applications
- Highest degree of mechanical and electrical safety
- Capacitive scanning system provides absolute position immediately after activation
- Measuring range and sense of rotation can be adjusted by a switch and two push-buttons
- Zero position and end position are independently adjustable
- Linear and V characteristic of the output value free programmable
- No wear, low annual maintenance and mountable anywhere
- Vibration and shock-resistant
- Analog output signal 4…20 mA, 2-wire connection
- Explosion protection acc. ATEX and IECEx
- Suitable for ocean-going vessels acc. GL

TECHNICAL DATA

Measuring range:	Free programmable between 0 … 360°
Measuring output:	4 … 20 mA, 2-wire connection
Power supply:	12 … 30 V DC (protected against wrong polarity)
Output variable I_A:	Load-independent DC current, proportional to the input angle
Max. residual ripple:	< 0.3% p.p.
Accuracy:	Error liwith ≤ ±0.5% (at reference conditions)
Sense of rotation:	Adjustable for sense of rotation clockwise or counterclockwise
Electrical connection:	Spring-type terminal block or plug connector M12, 4 poles

MECHANICAL DATA

Starting torque:	< 0.03 Nm
Clearance influence:	±0.1%
Drive shaft diameter:	10 mm 19 mm, with adapter flange NLB1019
Admissible static loading of shaft:	Max. 80 N (radial) Max. 40 N (axial)
Mounting position:	Any
Material:	Front: aluminium Back: aluminium anodized Shaft: rust-proof, hardened steel
Connections:	Cable gland metal or plug metal (M12 / 4 poles)
Weight:	Approx. 360 g Approx. 900 g, with adapter flange

ENVIRONMENTAL CONDITIONS

Climatic rating:	Standard (Non-Ex): Temperature –40 … +85 °C Rel. humidity ≤95 %, non-condensing Explosion protection: Temperature –40 … +70 °C Rel. humidity≤95 %, non-condensing
Housing protection:	IP 67 according to EN 60 529 IP 69k according to EN 40 050 - 9
Vibration:	IEC 60 068-2-6, 100 m/s^2 / 10 … 500 Hz
Shock:	IEC 60 068-2-27, ≤1000 m/s^2 / 11 ms
Electromagnetic compatibility:	The standards for noise immunity EN 61 000-6-2 and interference emission EN 61 000-6-4 are observed

with adapter flange

PROGRAMMING

The transmitter is programmable via switch and push-button. These will be visible after opening the top cover.
Zero and end position can be independently programmed via push-buttons. The direction of rotation and the shape of the output curve (linear or V-characteristic) are free adjustable via DIP switch.

CONNECTION ALLOCATION PLUG

Pin	Plug
1	+
2	–
3	not connected
4	⏚

ACCESSORIES

Article No.	Description	see page
168 105	Plug connector for M12 sensor plug, 5 poles	103
168 204	Mounting angle	105
168 212	Mounting plate	105
997 182	Mounting foot for WT720 with flange	106
997 190	Mounting flange for WT720 with flange	106
157 364	Kit mounting clamp	104

DOCUMENTATION

Article No.	Description
-	Data sheet
156 796	Operating instruction
1014	Flyer
-	3D CAD files in STEP and IGS

APPROVALS

Description
Declaration of conformity
ATEX approval
IECEx approval
GL approval

DIMENSIONS

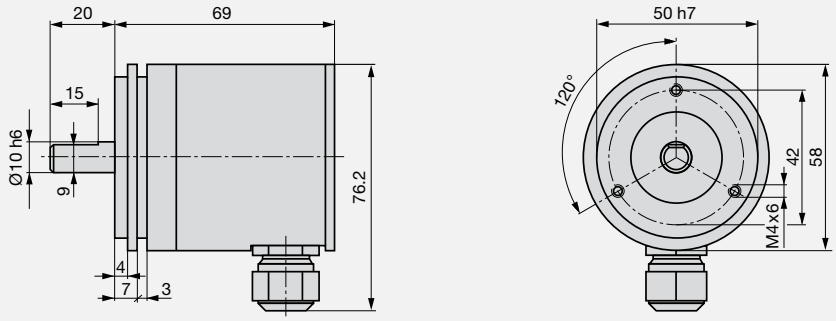

Dimensions KINAX WT720

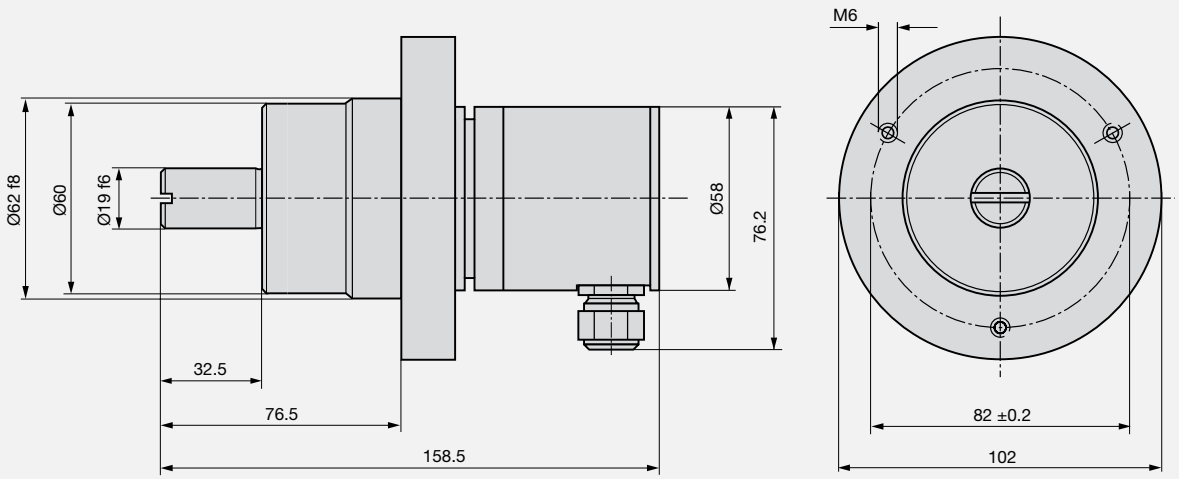

Dimensions KINAX WT720 with adapter flange

KINAX HW730

Programmable hollow-shaft transmitter for angular position for heavy duty applications, dia. 78 mm.

Converts the angular position of a shaft into a load independent direct current signal, proportional to the angular shaft position.

MAIN FEATURES

- Robust transmitter for angular position suitable for field applications
- Highest degree of mechanical and electrical safety
- Proven capacitive scanning system
- No wear, low annual maintenance and mountable anywhere
- Vibration and shock-resistant
- Measuring range, sense of rotation, zero position and linear/V-characteristic can be adjusted by a switch and two push-buttons
- Analog output signal 4…20 mA, 2-wire connection
- Zero position and end position are independently adjustable
- Capacitive scanning system provides absolute position immediately after activation
- Suitable for ocean-going vessels acc. GL

TECHNICAL DATA

Measuring range:	Free programmable between 0 … 360°
Measuring output:	4 … 20 mA, 2-wire connection
Power supply:	12 … 30 V DC (protected against wrong polarity)
Output variable I_A:	Load-independent DC current, proportional to the input angle
Reproducibility:	< 0.1°
Accuracy:	Error liwith ≤ ±0.35° (at reference conditions)
Sense of rotation:	Adjustable for sense of rotation clockwise or counterclockwise
Electrical connection:	Spring-type terminal block or plug connector M12, 4 poles

MECHANICAL DATA

Starting torque:	max 0.7 Nm
Clearance influence:	±0.1%
Hollow-shaft diameter:	30 mm, by reduction 10, 12, 16 or 20 mm
Mounting position:	Any
Material:	housing: aluminium anodized Shaft: rust-proof, hardened steel
Connections:	Cable gland metal or plug metal (M12 / 4 poles)
Weight:	Approx. 820 g

ENVIRONMENTAL CONDITIONS

Climatic rating:	Standard (Non-Ex): Temperature –40 … +85 °C Rel. humidity ≤ 95% non-condensing Explosion protection: Temperature –40 … +75 °C Rel. humidity ≤ 95% non-condensing
Housing protection:	IP 67 according to EN 60 529 IP 69k according to EN 40 050 - 9
Vibration:	IEC 60 068-2-6, 100 m/s^2 / 10 … 500 Hz
Shock:	IEC 60 068-2-27, ≤1000 m/s^2 / 11 ms
Electromagnetic compatibility:	The standards for noise immunity EN 61 000-6-2 and interference emission EN 61 000-6-4 are observed

PROGRAMMING

The transmitter is programmable via switch and push-button. These will be visible after opening the top cover.
Zero and end position can be independently programmed via push-buttons. The direction of rotation and the shape of the output curve (linear or V-characteristic) are free adjustable via DIP switch.

CONNECTION ALLOCATION PLUG

Pin	Plug
1	+
2	–
3	not connected
4	not connected

ACCESSORIES

Article No.	Description	see page
168 105	Plug connector for M12 sensor plug, 5 poles	103
169 749	Kit of torque support	104
	Adapter sleeve ø10 mm - ø20 mm	104

DOCUMENTATION

Article No.	Description
-	Data sheet
157 835	Operating instructions
1025	Flyer
-	3D CAD files in STEP and IGS

APPROVALS

Description
Declaration of conformity
ATEX approval
IECEx approval
GL approval

DIMENSIONS

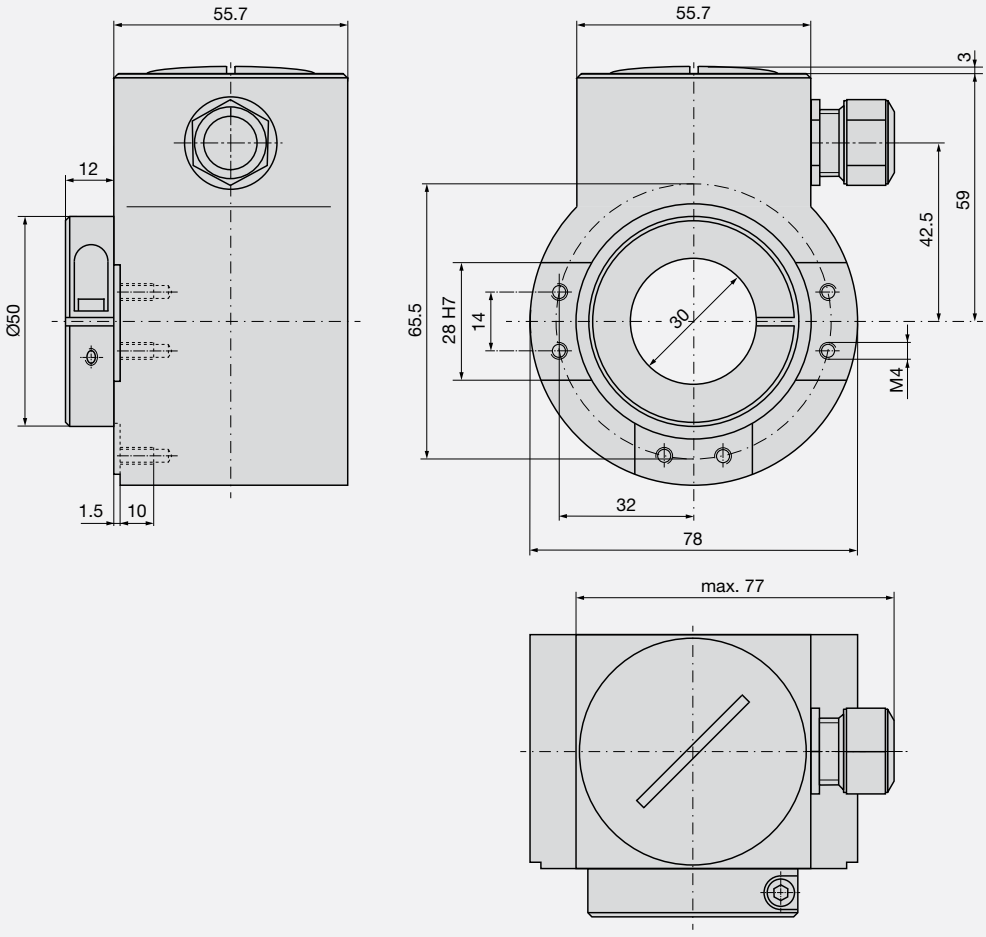

KINAX HW730 MODBUS/TCP – Power over Ethernet

Programmable hollow-shaft transmitter for angular position for heavy duty applications, dia. 78 mm.

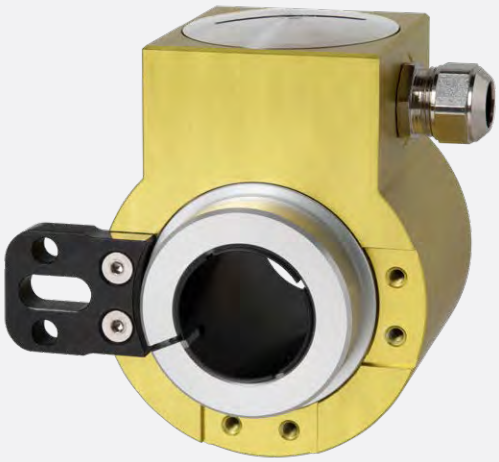

Acquires the angular position of a shaft without contact and provides it via Modbus/TCP.

MAIN FEATURES

- Robust transmitter for angular position suitable for field applications
- Highest degree of mechanical and electrical safety
- Proven capacitive scanning system
- No wear, low annual maintenance and mountable anywhere
- Vibration and shock-resistant
- Measuring range (zero point and end position) and sense of rotation via Modbus/TCP adjusted

TECHNICAL DATA

Measuring range:	Programmable between 0 … 360°
Power supply:	Power over Ethernet (PoE), class 0
Reproducibility:	< 0.1°
Accuracy:	Error liwith ≤ ±0.15° (at reference conditions)
Sense of rotation:	Adjustable for sense of rotation clockwise or counterclockwise
Electrical connection:	Spring-type terminal block or plug connector M12, 4 poles

MECHANICAL DATA

Starting torque:	max 0.5 Nm
Clearance influence:	±0.1%
Hollow-shaft diameter:	30 mm, by reduction 10, 12, 16 or 20 mm
Mounting position:	Any
Material:	housing: aluminium anodized Shaft: rust-proof, hardened steel
Connections:	Cable gland metal or plug metal (M12 / 4 poles)
Weight:	Approx. 820 g

ENVIRONMENTAL CONDITIONS

Temperature range:	–40 … +85 °C
Humidity:	max. rel. humidity ≤95 %, non-condensing
Housing protection:	IP 67 according to EN 60 529 IP 69k according to EN 40 050 - 9
Vibration:	IEC 60 068-2-6, 100 m/s^2 / 10 … 500 Hz
Shock:	IEC 60 068-2-27, ≤1000 m/s^2 / 11 ms
Electromagnetic compatibility:	The standards for noise immunity EN 61 000-6-2 and interference emission EN 61 000-6-4 are observed

PARAMETERISATION AND MEASURED VALUE ACQUISITION

The device may be completely parameterised via the configuration interface using the included PC software CB-Manager (see page 75).

MODBUS/TCP PROTOCOL WITH POWER OVER ETHERNET (POE)

The Modbus TCP/IP protocol is a widespread standard protocol based on a master/slave or client/server architecture. It is directly supported by all common operating systems and visualising tools thus perwithting the fast implementation of the devices. Transmission rates of 10/100 MBit are achieved via the Modbus/TCP interface.
Power over Ethernet (PoE) provides a transmission medium with a high band width for the direct current supply of network-compatible devices via the Ethernet cable.

Connection allocation spring-type terminal block

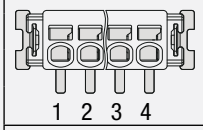

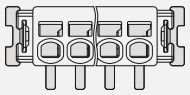

Pin	Signal	EIA-568-A	EIA-568-B
1	Rx-	green/white	orange/white
2	Rx+	green	orange
3	Tx-	orange/white	green/white
4	Tx+	orange	green
A		blue/white	blue/white
A		blue	blue
B		brown/white	brown/white
B		brown	brown

Connection allocation plug M12/4 poles d-coded

Pin	Signal
1	Rx+
2	Tx+
3	Rx-
4	Tx-

ACCESSORIES

Article No.	Description	see page
168 105	Plug connector for M12 sensor plug, 5 poles	103
169 749	Kit of torque support	104
	Adapter sleeve ø10 mm - ø20 mm	104

DOCUMENTATION

Article No.	Description
168 105	Data sheet
168 204	Operating instructions
168 212	Flyer
157 364	3D CAD files

APPROVALS

Description
Declaration of conformity

DIMENSIONS

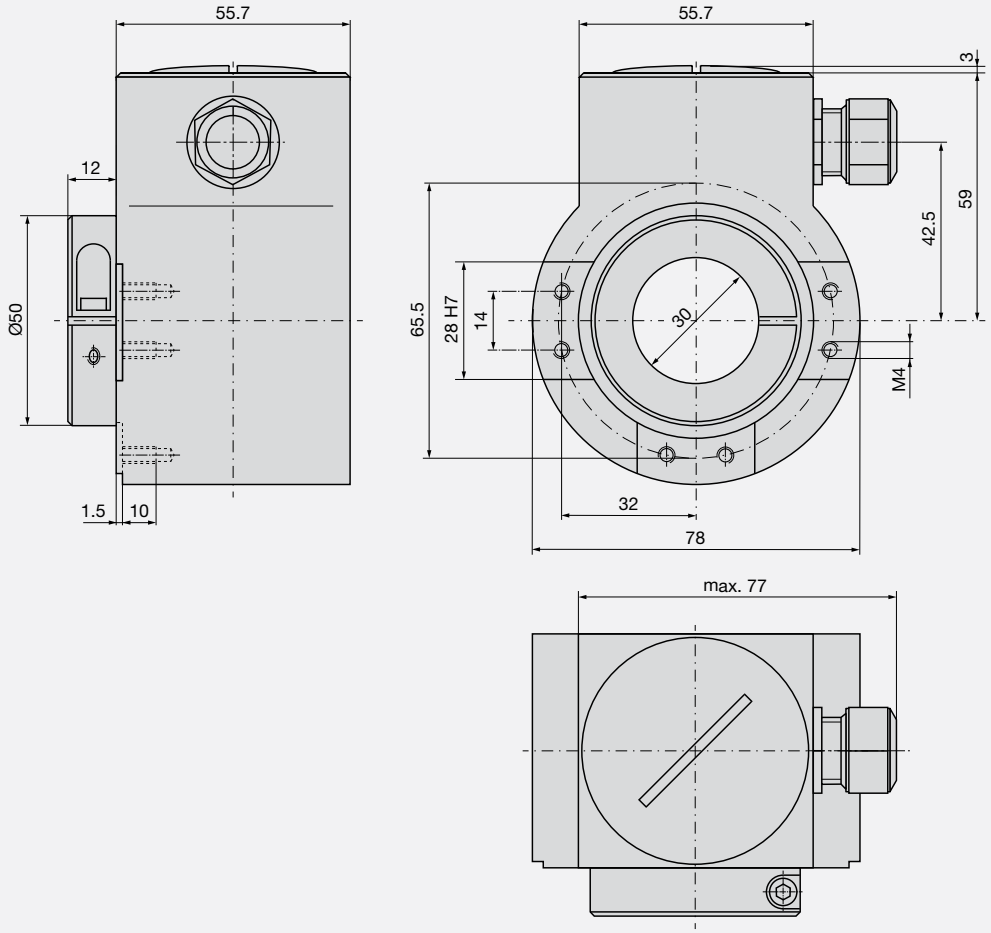

KINAX WT707

Shaft transmitter for angular position for heavy duty applications, >dia. 100 mm.

Converts the angular position of a shaft into a load independent direct current signal, proportional to the angular shaft position.

MAIN FEATURES

- Robust transmitter for angular position in singleturn und multiturn suitable for field applications
- Highest degree of mechanical and electrical safety
- Capacitive scanning system provides absolute position immediately after activation
- No wear, low annual maintenance and mountable anywhere
- Zero position and end position are adjustable
- Small bearing play influence < 0.1%
- Available with explosion protection “Intrinsic safety” Ex ia IIC T6
- Can be mounted in hazardous area
- Also available as sea-water resistant version
- Suitable for ocean-going vessels acc. GL

TECHNICAL DATA

Measuring range: 0 … 5°, 0 … 10°, 0 … 30°, 0 … 60°, 0 … 90°, 0 … 180°, 0 … 270° (without gear)
0 … 10°, 0 … 30°, 0 … 60°, 0 … 90°, 0 … 180°, 0 … 270° up to max. 1600 turns (with additional gear)

Measuring output: 0 … 1 mA, 0 … 5 mA, 0 … 10 mA, 0 … 20 mA, 4 … 20 mA with 3 or 4-wire connection
4 … 20 mA with 2-wire connection

Output variable I_A: Load-independent DC current, proportional to the input angle

Current liwithation: I_A max. 40 mA

Residual ripple in output current: <0.3% p.p.

Power supply: DC and AC voltage (DC/AC power pack)

Nominal voltage UN	Tolerance
24 … 60 V DC / AC	DC –15 … +33% AC ±15%
85 … 230 V DC / AC	

DC voltage only
12 … 33 V DC (version non-intrinsically safe, without electric isolation)
12 … 30 V DC (version intrinsically safe, without electric isolation)
Max. current consumption approx. 5 mA + I_A
Max. residual ripple 10% p.p.
(must not fall below 12 V)

Accuracy: Error liwith ≤ 0.5% for ranges 0 … ≤150°
Error liwith ≤1.5% for ranges of up 0 … >150° to 0 … 270°

Reproducibility: <0.2%

Response time: <5 ms

Electrical connection: Plug connector or cable glands, connection print with screw terminals

MECHANICAL DATA

Starting torque: Approx. 25 Ncm

Clearance influence: ±0.1%

Drive shaft diameter: 19 mm or 12 mm

Admissible static loading of shaft: Max. 1000 N (radial)
Max. 500 N (axial)

Mounting position: Any

Material: Housing flange standard: steel
Housing flange sea-water: high-grade steel 1.4462
Housing cover with plug connector: plastic
Housing cover with cable glands: aluminium
Shaft: rust-proof hardened steel

Weight: Approx. 2.9 kg (without additional gear)
Approx. 3.9 kg (with additional gear)

Sea-water resistant version

ENVIRONMENTAL CONDITIONS

Climatic rating:	Standard (Non-Ex): Temperature –25 … +70 °C Rel. humidity ≤90 %, non-condensing Version with improved climatic rating (Non-Ex): Temperature –40 … +70 °C Rel. humidity ≤95 %, non-condensing Explosion protection: Temperature –40 … +55 °C at T6 resp. –40 … +70 °C at T5 resp. –40 … +75 °C at T4
Housing protection:	IP 66 acc. to EN 60 529
Vibration:	IEC 60 068-2-6, 10g continuously, 15g (every 2 h in 3 directions) / 0 … 200 Hz 5g continuously, 10g (every 2 h in 3 directions) / 200 … 500 Hz
Shock:	IEC 60 068-2-27, 3 x 50g (10 pulses per axis and direction)
Electromagnetic compatibility:	The standards for noise immunity EN 61 000-6-2 and interference emission EN 61 000-6-4 are observed
Explosion protection:	Intrinsically safe Ex II 2 G / Ex ia IIC T6 acc. to EN 60 079-0: 2006 and EN 60 079-11: 2007

AUXILIARY TRANSMISSION

Using an optimum auxiliary transmission KINAX WT707 can also be employed for multiturn applications. The selection of the correct gear ratio results in up to 1600 revolutions. You may choose auxiliary transmissions with a gear ratio from 2:1 up to 1600:1.

SPECIAL SEA WATER DESIGN

Using the special sea water design, KINAX WT707 can be employed under extreme environmental conditions. The special steel housing makes it particularly suited to applications in aggressive media like sea water, lyes, acids and cleaning agents.

Data on explosion protection (type of protection «Intrinsic safety»)

Order code	Marking		Certificates	Mounting location of the instrument
	Instrument	Meas. output		
707 - 2 …	Ex ia IIC T6	U_i = 30 V I_i = 160 mA P_i = 1 W C_i ≤ 10 nF L_i = 0	ZELM 10 ATEX 0427X	Within the hazardous area, zone 1

ACCESSORIES

Article No	Description	see page
997 182	Mounting foot	106
997 190	Mounting flange	106

DOCUMENTATION

Article No.	Description
-	Data sheet
993 651	Operating instructions
1019	Flyer

APPROVALS

Description
Declaration confirwithy
ATEX approval
IECEx approval
GL approval

DIMENSIONS

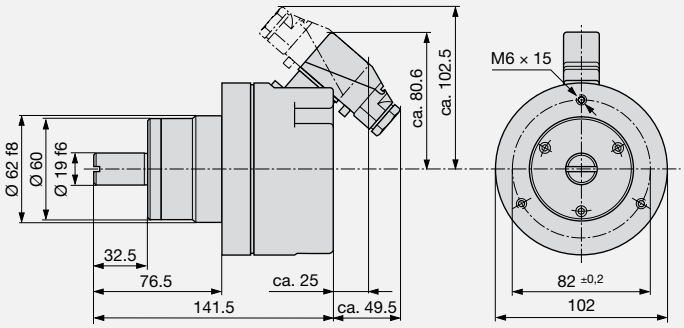

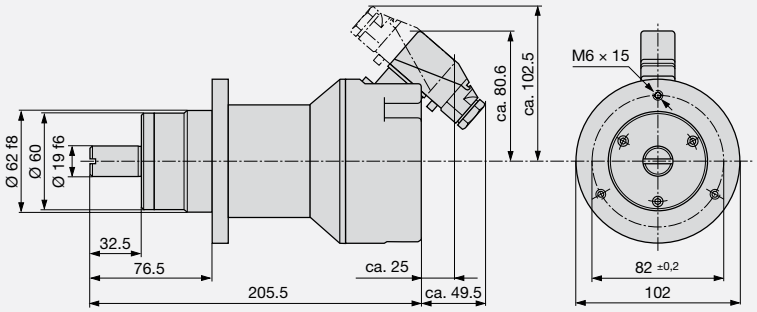

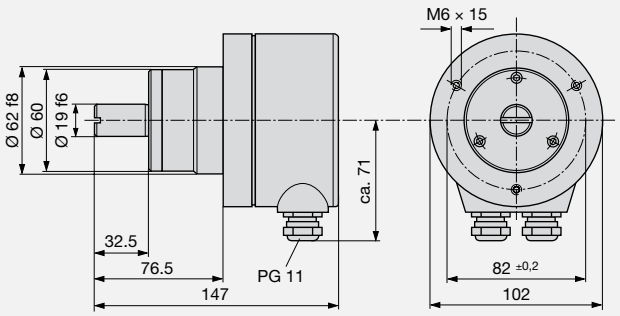

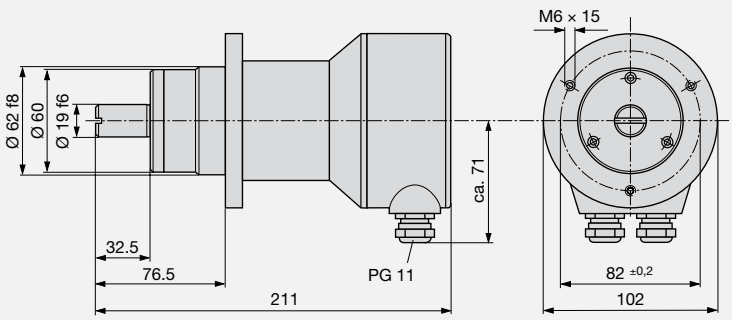

KINAX WT717

Programmable shaft transmitter for angular position for heavy duty applications, >dia. 100 mm.

Converts the angular position of a shaft into a load independent direct current signal, proportional to the angular shaft position.

MAIN FEATURES

- Robust transmitter for angular position in singleturn and multiturn suitable for field applications
- Highest degree of mechanical and electrical safety
- Capacitive scanning system provides absolute position immediately after activation
- No wear, low annual maintenance and mountable anywhere
- Measuring range, sense of rotation, characteristic, switching point programmed using PC
- Adjustement / Independent fine adjustment of the analog output, zero position and measuring range
- Simulation of measured values / The testing of the subsequent device chain is already possible during the installation phase
- Measured value acquisition / Display of the instantaneous value and a trend graph of the measured value on the screen
- Characteristic of the output value / Programmable as a linear, V-characteristic, or any characteristic curve
- Small bearing play influence < 0.1%
- Available with explosion protection “Intrinsic safety” Ex ia IIC T6
- Can be mounted within the hazardous area
- Also available as sea-water resistant version

TECHNICAL DATA

Measuring range:	Programmable between 0 … 10°, 0 … 50°, 0 … 350° (without gear) Programmable between 0 … 10°, 0 … 50°, 0 … 350° up to max. 1600 turn (with gear)
Measuring output:	4 … 20 mA with 2-wire connection
Output variable I_A:	Load-independent DC current, proportional to the input angle
Current liwithation:	I_A max. 40 mA
Power supply:	12 … 33 V DC (version non-intrinsically safe, without electric isolation) 12 … 30 V DC (version intrinsically safe, without electric isolation)
Power consumption max.:	Approx. 5 mA + I_A
Residual ripple in output current:	< 0.3% p.p.
Accuracy:	Error liwith ≤ ±0.5%
Reproducibility:	< 0.2%
Response time:	< 5 ms
Electrical connection:	Cable glands, connection print with screw terminal

MECHANICAL DATA

Starting torque:	Approx. 25 Ncm
Clearance influence:	±0.1%
Drive shaft diameter:	19 mm or 12 mm
Admissible static loading of shaft:	Max. 1000 N (radial) Max. 500 N (axial)
Mounting position:	Any
Material:	Housing flange standard: steel Housing flange sea-water: high-grade steel 1.4462 Housing cover with cable glands: aluminium Shaft: rust-proof hardened steel
Weight:	Approx. 2.9 kg (without additional gear) Approx. 3.9 kg (with additional gear)

Sea-water resistant version

ENVIRONMENTAL CONDITIONS

Climatic rating:	Standard (Non-Ex): Temperature –25 … +70 °C Rel. humidity ≤90 %, non-condensing Version with improved climatic rating (Non-Ex): Temperature –40 … +70 °C Rel. humidity ≤95 %, non-condensing Explosion protection: Temperature –40 … +55 °C at T6 resp. –40 … +70 °C at T5 resp. –40 … +75 °C at T4
Housing protection:	IP 66 according to EN 60 529
Vibration:	IEC 60 068-2-6, 50 m/s² / 10 … 200 Hz (every 2 h in 3 directions)
Shock:	IEC 60 068-2-27, ≤ 500 m/s² (10 pulses per axis and direction)
Electromagnetic compatibility:	The standards for noise immunity EN 61 000-6-2 and interference emission EN 61 000-6-4 are observed
Explosion protection:	Intrinsically safe Ex II 2 G / Ex ia IIC T6 acc. to EN 60 079-0: 2006 and EN 60 079-11: 2007

AUXILIARY TRANSMISSION

Using an optimum auxiliary transmission KINAX WT717 can also be employed for multiturn applications. The selection of the correct gear ratio results in up to 1600 revolutions. You may choose auxiliary transmissions with a gear ratio from 2:1 up to 1600:1.

SPECIAL SEA WATER DESIGN

Using the special sea water design, KINAX WT717 can be employed under extreme environmental conditions. The special steel housing makes it particularly suited to applications in aggressive media like sea water, lyes, acids and cleaning agents.

Data on explosion protection (Type of protection «Intrinsic safety»)

Order Code	Marking		Certificates	Mounting location of the instrument
	Instrument	Meas. output		
717 - 2 …	Ex ia IIC T6	U_i = 30 V I_i = 160 mA P_i = max. 1 W C_i ≤6,6 nF L_i = 0	ZELM 03 ATEX 0123	Within the hazardous area, zone 1

ACCESSORIES

Article No	Description	see page
997 182	Mounting foot	106
997 190	Mounting flange	106

DOCUMENTATION

Article No	Description
168 105	Data sheet
168 204	Operating instructions
1019	Flyer

APPROVALS

Description
Declaration conformity
ATEX approval

DIMENSIONS

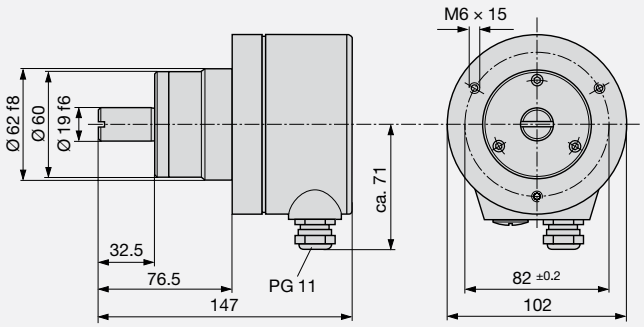

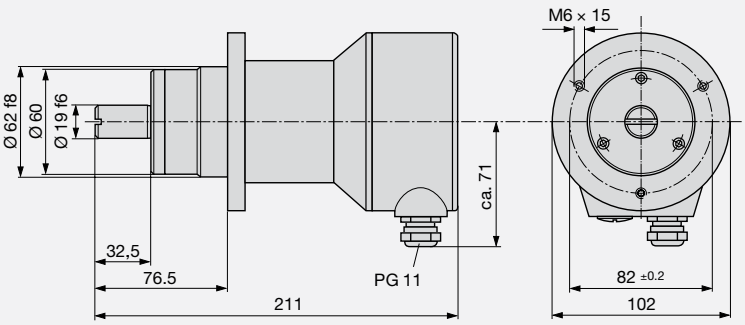

KINAX 3W2

Shaft transmitter for angular position to be installed.

Converts the angular position of a shaft into a load independent direct current signal, proportional to the angular shaft position.

MAIN FEATURES

- Compact transmitter for angular position to be installed into other equipments
- Capacitive scanning system provides absolute position immediately after activation
- No wear, low annual maintenance and mountable anywhere
- Adjustable zero point and measuring span
- Small bearing play influence < 0.1%
- Small starting torque < 0.001 Ncm
- Available with explosion protection “Intrinsic safety” Ex ia IIC T6
- Can be mounted within the hazardous area
- Suitable for ocean-going vessels acc. GL

TECHNICAL DATA

Measuring range:	0 … 10°, 0 … 30°, 0 … 60°, 0 … 90°, 0 … 180°, 0 … 270°
Measuring output:	0 … 1 mA, 0 … 5 mA, 0 … 10 mA, 0 … 20 mA, 4 … 20 mA Each with 3- or 4-wire connection 4 … 20 mA with 2-wire connection
Power supply:	12 … 33 V DC (version non-intrinsically safe) 12 … 30 V DC (version intrinsically safe)
Residual ripple in output current:	< 0.3% p.p.
Residual ripple max.:	10% p.p. (must not fall below 12 V)
Accuracy:	Error liwith ≤ ±0.5% for ranges 0 … ≤ 150° Error liwith ≤1.5% for ranges of 0 … > 150° to 0 … 270°
Reproducibility:	< 0.2%
Response time:	< 5 ms
Electrical connection:	Soldering terminals (protection class IP 00 acc. to EN 60 529) or wiring print with screw terminals or wiring print with AMP connections or wiring print with pads or wiring print with trans-zorb-diode

MECHANICAL DATA

Starting torque:	< 0.001 Ncm with shaft 2 mm < 0.03 Ncm with shaft 6 mm resp. 1/4”
Clearance influence:	±0.1%
Drive shaft diameter:	2 mm, 6 mm or 1/4”
Admissible static loading of shaft:	

Sense	Drive shaft diameter	
	2 mm	6 mm resp. 1/4"
radial max	16 N	83 N
axial max	25 N	130 N

Mounting position:	Any
Material:	Chromated aluminium Shaft: rust-proof hardened steel
Weight:	Approx. 100 g Approx. 3.9 kg (with additional gear)

Wiring print with trans-zorb-diode

Wiring print with screw terminals

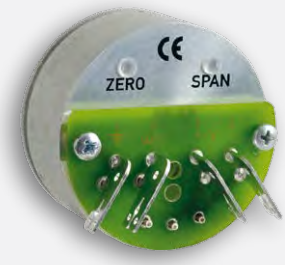

Wiring print with AMP connections

ENVIRONMENTAL CONDITIONS

Climatic rating:	Standard (Non-Ex): Temperature – 25 … +70 °C Rel. humidity ≤ 90 % non-condensing Version with improved climatic rating (Non-Ex): Temperature – 40 … +70 °C Rel. humidity ≤ 95 % non-condensing Explosion protection: Temperature – 40 … +55 °C at T6 resp. – 40 … +70 °C at T5 resp. – 40 … +75 °C at T4
Housing protection:	IP 50 according to. EN 60 529
Vibration:	IEC 60 068-2-6, 50 m/s² / 10 … 200 Hz (every 2 h in 3 directions)
Shock:	IEC 60 068-2-27, ≤500 m/s² (10 pulses per axis and direction)
Electromagnetic compatibility:	The standards for noise immunity EN 61 000-6-2 and interference emission EN 61 000-6-4 are observed
Explosion protection:	Intrinsically safe Ex II 2 G / Ex ia IIC T6 acc. to EN 60 079-0: 2006 and EN 60 079-11: 2007

Data on explosion protection (Type of protection «Intrinsic safety»)

Order Code	Marking		Certificates	Mounting location of the instrument
	Instrument	Meas. output		
708 - 2 …	Ex ia IIC T6	U_i = 30 V I_i = 160 mA P_i = 1 W C_i ≤ 10 nF L_i = 0	ZELM 10 ATEX 0427X	Within the hazardous area

ACCESSOIRIES

Article No.	Description	see page
177 354	Mounting-Kit	104

DOCUMENTATION

Article No.	Description
-	Data sheet
993 304	Operating instructions
1018	Flyer

APPROVALS

Description
Declaration of conformity
ATEX approval
IECEx approval
GL approval

DIMENSIONS

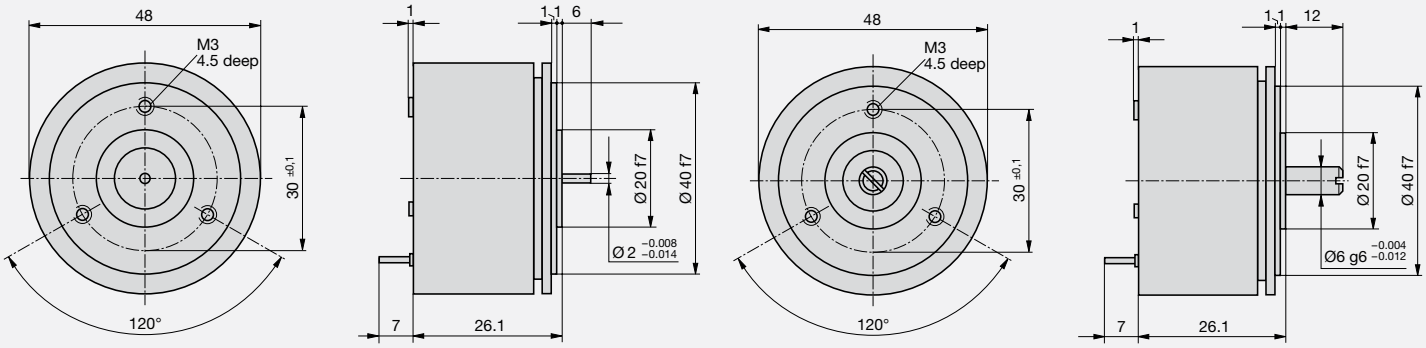

KINAX 2W2

Programmable shaft transmitter for angular position to be installed.

Converts the angular position of a shaft into a load independent direct current signal, proportional to the angular shaft position.

MAIN FEATURES

- Compact transmitter for angular position to be installed into other equipments
- Capacitive scanning system provides absolute position immediately after activation
- No wear, low annual maintenance and mountable anywhere
- Measuring range, sense of rotation, characteristic, switching point programmed using PC
- Adjustement / Independent fine adjustment of the analog output, zero position and measuring range
- Simulation of measured values / The testing of the subsequent device chain is already possible during the installation phase
- Measured value acquisition / Display of the instantaneous value and a trend graph of the measured value on the screen
- Characteristic of the output value / Programmable as a linear, V-characteristic, or any characteristic curve
- Small bearing play influence < 0.1%
- Small starting torque < 0.001 Ncm
- Available with explosion protection “Intrinsic safety” Ex ia IIC T6
- Can be mounted within the hazardous area

TECHNICAL DATA

Measuring range:	Programmable between 0 … 10°, 0 … 50°, 0 … 350°
Measuring output:	4 … 20 mA with 2-wire connection
Power supply:	12 … 33 V DC (non intrinsically safe version) 12 … 30 V DC (intrinsically safe version)
Residual ripple in output current:	< 0.3% p.p.
Accuracy:	Error liwith ≤ ±0.5%
Reproducibility:	< 0.2%
Response time:	< 5 ms
Electrical connections:	Soldering terminals (protection class IP 00 acc. to EN 60 529) or wiring print with screw terminals

MECHANICAL DATA

Starting torque:	<0.001 Ncm with shaft 2 mm <0.03 Ncm with shaft 6 mm resp. 1/4"
Clearance influence:	±0.1 %
Drive shaft diameter:	2 mm, 6 mm oder 1/4"

Admissible static loading of shaft:

Sense	Drive shaft diameter	
	2 mm	6 mm resp. 1/4"
radial max	16 N	83 N
axial max	25 N	130 N

Mounting position:	Any
Material:	Chromated aluminium Shaft: rust-proof hardened steel
Weight:	Approx. 100 g

Wiring print with screw terminals

ENVIRONMENTAL CONDITIONS

Climatic rating:	Standard (Non-Ex): Temperature –25 … +75 °C Rel. humidity ≤ 90 % non-condensing Version with improved climatic rating (Non-Ex): Temperature –40 … +75 °C Rel. humidity ≤ 95 % non-condensing Explosion protection: Temperature –40 … +55 °C at T6 resp. –40 … +70 °C at T5 resp. –40 … +75 °C at T4
Housing protection:	IP 50 according to EN 60 529
Vibration:	IEC 60 068-2-6, 50 m/s² / 10 … 200 Hz (every 2 h in 3 directions)
Shock:	IEC 60 068-2-27, ≤500 m/s² (10 pulses per axis and direction)
Electromagnetic compatibility:	The standards for noise immunity EN 61 000-6-2 and interference emission EN 61 000-6-4 are observed
Explosion protection:	Intrinsically safe Ex II 2 G / Ex ia IIC T6 acc. to EN 60 079-0: 2006 and EN 60 079-11: 2007

PROGRAMMING:

Interface:	Serial interface A PC, the programming cable PK610 plus ancillary cable and the configuration software 2W2 (see chapter software and accessories) are required to program the KINAX 2W2.

ACCESSOIRIES

Article No.	Description	see page
177 354	Mounting-Kit	104

DOCUMENTATION

Article No.	Description
168 105	Data sheet
149 965	Operating instructions
1018	Flyer

APPROVALS

Description
Declaration conformity
ATEX approval

BASIC CONFIGURATION

Order code	Mechanical angle range	Measuring range	Switching point	Sense of rotation	Characteristic of output variable
760 - 1111 100	50°	0 … 50°	55°	Clockwise	linear
760 - 1211 100	350°	0 … 350°	355°	Clockwise	linear

Data on explosion protection (type of protection «Intrinsic safety»)

Order code	Marking		Certificate	Mounting location of the instrument
	Instrument	Meas. instrument		
760 - 2 …	Ex ia IIC T6	U_i = 30 V I_i = 160 mA P_i = 1 W C_i = 6.6 nF L_i = 0	ZELM 03 ATEX 0123	Within the hazardous area, zone 1

DIMENSIONS

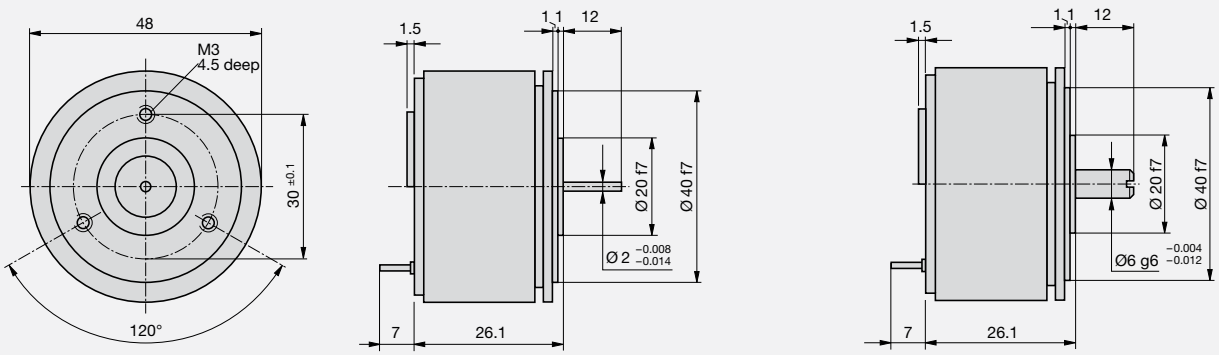

INCLINATION TRANSMITTERS

Inclination transmitters unidimensional.

The determination of the exact position of an object is important when monitoring moving objects. There is hardly any moving object whose position cannot be monitored by an inclination transmitter. They are the allrounders in instrumentation. Applications cover from the acquisition of the angular position of crane jibs, the lateral inclination of vehicles, the orientation of lifting platforms, of weir traps and similar facilities through to machine monitoring.
Inclination transmitters work like a plummet.
They measure the deviation from the horizontal or vertical within the reference point provided by the direction of gravity. In relation to angular position transmitters, inclination transmitters feature the advantage of a direct acquisition of inclination values in which they do not require any mechanical interconnection with the actuators.
One or two inclination axes are monitored depending on the application purpose of the object. For this reason, inclination transmitters are divided into two types.

One-dimensional inclination transmitters

As the name indicates, a one-dimensional inclination transmitter can only measure one axis.

Two-dimensional inclination transmitters

Two axes can be measured simultaneously. A separate measured value is available for both axes. The base plate must be horizontally aligned, i.e. parallel to the horizontal plane.
The inclination angle in relation to the surface of the earth can be measured by different methods.

Oil-damped pendulum system

In this method, a test mass in form of a pendulum surrounded by oil is changed in its position by inclination or gravitational acceleration. The angle is measured by the pendulum swing.

Liquid level analysis

In liquid levels, the medium to be measured always aligns itself vertically in relation to gravity. Electrodes are arranged parallel to the tilting axis on the bottom of an electrolyte chamber filled with conductive liquid. If alternating current

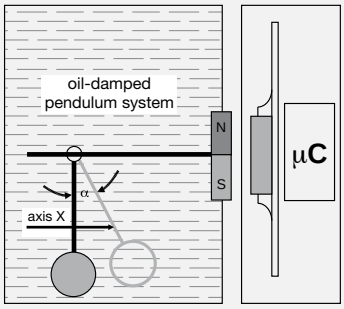

is applied between the two electrodes, a stray field develops. The stray field is constricted as tilting of the sensor reduces the liquid level. The constant conductibility of the electrolyte causes a resistance change related to the level. If electrodes are arranged in pairs on the right and left half of the bottom of the sensor cell in relation to the tilt axis, the inclination angle can be determined by the differential measurement principle.

Thermic method

The thermic method uses convection: A gas heated in a measuring cell always rises. Temperature sensors are arranged around the measuring cell which acquire the direction of the generated flow of heat according to a difference method. The inclination angle is determined on basis of the temperature change.

Microelectromechanical system (MEMS)

Another measuring method concerns the microelectromechanic system (MEMS). The design of the MEMS sensor element is based on a fixed and a movable electrode in form of two engaging comb structures (or interdigital structures). An acceleration in the direction of the measuring axis moves the mass and changes the capacity values between the fixed and the moveable electrodes. This capacity change is processed by the integrated ASIC and converted into an output signal which can easily be acquired for measuring purposes.

The one-dimensional inclination transmitters used by Camille Bauer are based on the magnetic measuring principle with an oil-damped pendulum system. The instruments are characterised by numerous special features which predestine them for heavy-duty operation. The emphasis is always on quality, reliability and robustness.

COMMON APPLICATIONS

Solar energy plants

- Exact alignment of solar panels and parabolic mirrors

Throttle valves and slidegates of power plants

- Exact acquisition of weir trap positions

Shipping and offshore plants

- Exact acquisition of the lateral inclination of ships and offshore plants
- Exact acquisition of the position of a lifting platform

Crane vehicles, fork-lift trucks and heavy duty vehicles

- Exact positioning of a crane jib
- Exact acquisition of the lateral inclination of a vehicle

Dredgers and drilling equipment

- Exact acquisition and positioning of dredger arms
- Exact acquisition of the lateral inclination of a dredger or drill

APPLICATION EXAMPLES

Measurement of transverse inclination of ships

The exact determination and monitoring of the transverse position of a ship on the high seas is vital. To determine the position exactly, inclination sensors are mounted on the hull which constantly measure the inclination of the ship.

Cruise liner

KINAX N702

Inclination transmitter unidimensional.

The transmitter converts the tilt angle into a direct current signal, proportional to the angle. Tilt angle values of a platform stand for important measuring data as a part of the safety and control system of that type of machinery.

MAIN FEATURES

- Robust magnetoresistive angular position transmitter, conctact free, freely rotatable without stops
- With oil-damped pendulum system
- The sensor is contact free and has minimal abrasion on the pendulum
- Measuring range, sense of rotation and zero position programmed directly at the transmitter

TECHNICAL DATA

Measuring princip:	Magnetoresistive angular position transmitter, contact free, freely rotatable
Measuring range:	0 … 360°, freely programmable
Measuring output:	4 … 20 mA with 3-wire connection
Power supply:	18 … 33 V DC No protection against wrong polarity
Current consumption:	< 80 mA
Load resistant:	Max. 600 Ω
Accuracy:	±0.2°
Resolution:	14 Bit
Transient response:	By 25° tilts < 1 sec.
Electrical connection:	Connector M12 x 1, 5 poles

MECHANICAL DATA

Pendulum damping:	With silicon oil
Mounting position:	Any
Material:	Housing: coated aluminium
Weight:	Approx. 300 g

ENVIRONMENTAL CONDITIONS

Temperature range:	−30 … +70 °C
Humidity:	Relative humidity max. ≤ 90%, non-condensing
Housing protection:	IP 66 according to EN 60 529
Vibration:	IEC 60 068-2-6, 40 m/s² / 0 … 100 Hz

PIN CONFIGURATION OF CONNECTOR M12

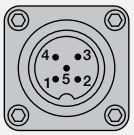

Pin assignments
1 = 0 V
2 = +24 V
4 = +20 mA or +10 V

DIMENSIONS

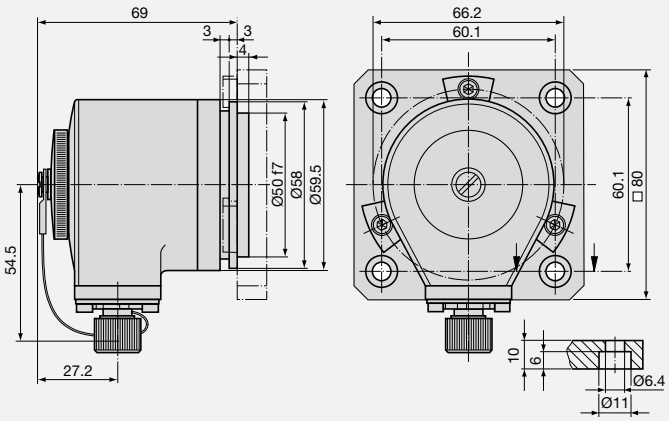

KINAX N702-CANopen

Inclination transmitter unidimensional.

The transmitter converts the tilt angle into a direct current signal, proportional to the angle. Tilt angle values of a platform stand for important measuring data as a part of the safety and control system of that type of machinery.

MAIN FEATURES

- Robust magnetoresistive CANopen angular position transmitter, conctact free, freely rotatable without stops
- With oil-damped pendulum system
- The sensor is contact free and has minimal abrasion on the pendulum
- Pendulum shaft has no mechanical stops and can be 360° infinitely rotated
- Reduced wiring expenditure
- Autoconfiguration of the network
- Comportable access of all instrument parameters
- Instrument synchronisation, simultaneous data read-in and read

TECHNICAL DATA

Measuring principle:	Magnetoresistive angular position transmitter, contact free, freely rotatable
Measuring range:	0 … 360°
Tilt angle:	−180° … +179.9°
Measuring output:	CAN-Bus interface
Protocole:	CANopen
Power supply:	18 … 33 V DC, no protection against wrong polarity
Power consumption:	< 80 mA
Baudrate:	1 MBit/s
Accuracy:	±0,2°
Resolution:	14 Bit
Transient response:	By 25° tilts < 1 sec.
Electrical connection:	Connector M12 x 1, 5 poles

MECHANICAL DATA

Pendulum damping:	With silicon oil
Mounting position:	Any
Material:	Housing: coated aluminium
Weight:	Approx. 300 g

ENVIRONMENTAL CONDITIONS

Temperature range:	−30 … +70 °C
Humidity:	Relative humidity max. ≤ 90%, non-condensing
Housing protection:	IP 66 according to EN 60 529
Vibration:	IEC 60 068-2-6, 40 m/s² / 0 … 100 Hz

PIN CONFIGURATION OF CONNECTOR M12

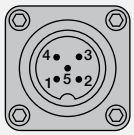

Pin assignments

1 = CAN Shld	4 = CAN High
2 = +24 V DC	5 = CAN Low
3 = GND	

DIMENSIONS

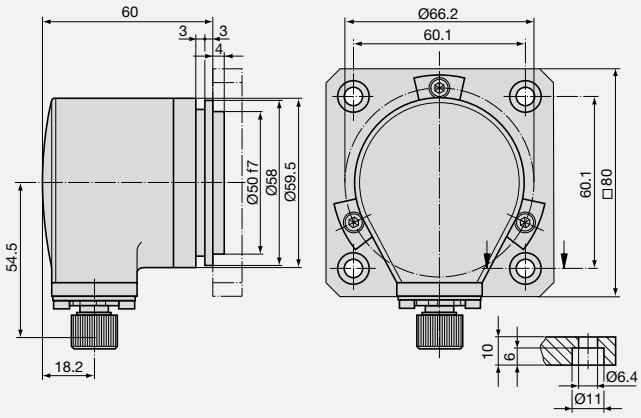

KINAX N702-SSI

Inclination transmitter unidimensional.

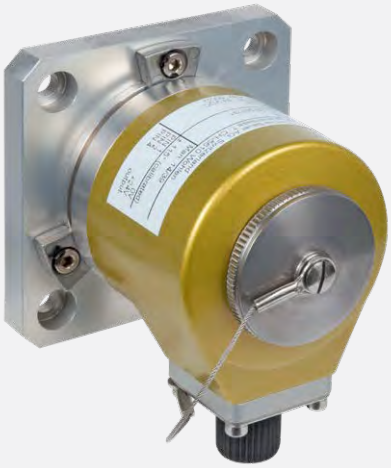

The transmitter converts the tilt angle into a direct current signal, proportional to the angle. Tilt angle values of a platform stand for important measuring data as a part of the safety and control system of that type of machinery.

MAIN FEATURES

- Robust magnetoresistive angular position transmitter with interface SSI, contact free, freely rotatable without stops
- With oil-damped pendulum system
- The sensor is contact free and has minimal abrasion on the pendulum
- Measuring range, sense of rotation, zero position and measuring span programmed directly at the transmitter

TECHNICAL DATA

Measuring principe:	Magnetoresistive angular position transmitter, contact free, freely rotatable
Measuring range:	0 … 360°, freely programmable
Measuring output:	SSI binary code
Power supply:	9 … 33 V DC, no protection against wrong polarity
Power consumption:	< 100 mA
Accuracy:	±0.2°
Resolution:	14 Bit
Transient response:	By 25° tilts < 1 sec.
Electrical connection:	Connector M12 x 1, 8 poles
Max. clock rate:	1 MHz

MECHANCAL DATA

Pendulum damping:	With silicon oil
Mounting position:	Any
Material:	Housing: coated aluminium
Weight:	Approx. 300 g

ENVIRONMENTAL CONDITIONS

Temperature range:	–30 … +70 °C
Humidity:	Rel. humidity max. ≤ 90%, non-condensing
Housing protection:	IP 66 according to EN 60 529
Vibration:	IEC 60 068-2-6, 40 m/s² / 0 … 100 Hz

PIN CONFIGURATION OF CONNECTOR M12

Pin	Cable colour	Signals	Description
1	White	0 V	Operating voltage
2	Brown	+Vs	Operating voltage
3	Green	Clock +	Clocking line
4	Yellow	Clock –	Clocking line
5	Grey	Data +	Data line
6	Pink	Data –	Data line
7	Blue	open	Not used
8	Red	open	Not used
Screening			Housing

DIMENSIONS

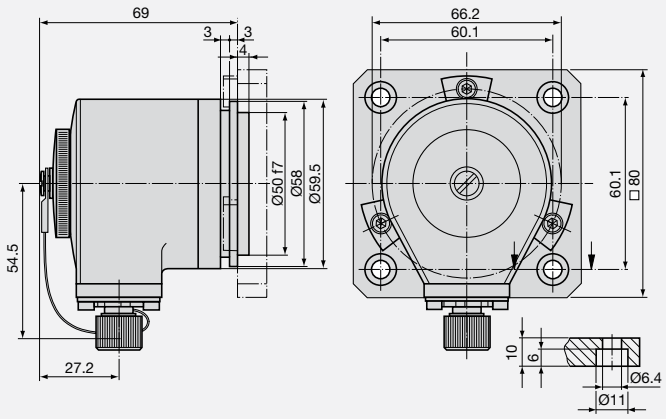

KINAX N702-INOX

Inclination transmitter unidimensional.

The transmitter converts the tilt angle into a direct current signal, proportional to the angle. Tilt angle values of a platform stand for important measuring data as a part of the safety and control system of that type of machinery.

MAIN FEATURES

- Robust inclination transmitter suitable for eld applications
- Hermetically sealed stainless-steel INOX AiSi 316Ti (1.4571) housing with a protection class of IP68 and IP69K
- Resistant to aggressive media such as sea water and detergent
- Steadfast to high mechanical loads
- Free parameterization via control line

TECHNICAL DATA

Measuring principe:	Magnetic, one-dimensional inclination transmitter with hall sensor and oil-damped pendulum system, hermetically sealed, contact free, freely rotatable without stops
Measuring range:	Programmable between 0 … 360°
Power supply:	8 … 33 VDC
Power consumption:	<22 mA
Basic accuracy:	< ±0.2° (at +25 °C)
Resolution:	12 Bit
Transient response:	By 25° tilts <1 sec.

MECHANICAL DATA

Pendulum damping:	By oil filling
Mounting position:	Perpendicular to the measurement object
Material:	Stainless-steel INOX AiSi 316Ti (1.4571)
Weight:	Approx. 1.1 kg

ENVIRONMENTAL CONDITIONS

Temperature range:	–30 … +70 °C
Humidity:	Rel. humidity ≤100 %
Housing protection:	IP 68 according to EN 60 529 IP 69K according to EN 40 050-9
Vibration:	300 m/s² / 18 ms according to EN 60 068-2-27

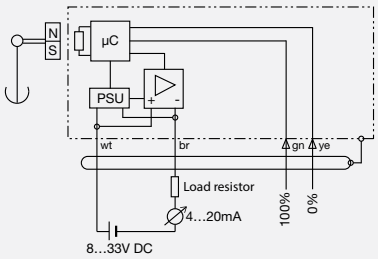

White (wt) = +24V
Brown (br) = 4…20 mA
Green (gn) = 100%
Yellow (ye) = 0%

DIMENSIONS

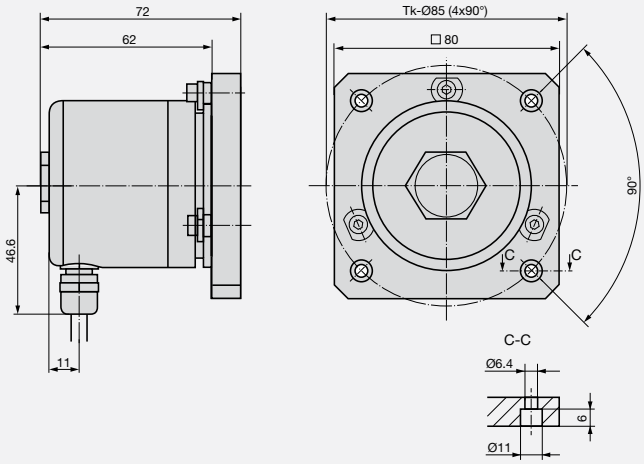

KINAX N702-INOX HART

Inclination transmitter unidimensional.

The KINAX N702-INOX HART is a very robust, absolute inclination transmitter. It is particularly suited for harsh environments due to it is high mechanical strength and the hermetically sealed stainless steel housing.

MAIN FEATURES

- Hermetic watertight and dust-proof housing IP68
- Resistant to aggressive media such as sea waterand detergent
- Stainless-steel housing INOX AiSi 316Ti (1.4571)
- High measuring accuracy (±0.2°)
- Steadfast to high mechanical loads due to robust design and high-quality materials
- Safe electrical connection by flexible signal line
- Standard synchro flange or mounting plate
- 2-wire connection via flexible signal line
- HART compatible
- Simple parameterization via standard Common Practice Commands without additional DD

TECHNICAL DATA

Measuring principe:	Magnetoresistive angular position transmitter, contact free, freely rotatable
Measuring range:	0 … 360°, free programmable
Measuring output:	SSI binary code
Power supply:	9 … 33 V DC, no protection against wrong polarity
Power consumption:	<100 mA
Accuracy:	±0.2°
Resolution:	14 Bit
Transient response:	by 25° tilts <1 sec.
Electrical connection:	Connector M12 x 1, 8 poles
Max. clock rate:	1 MHz

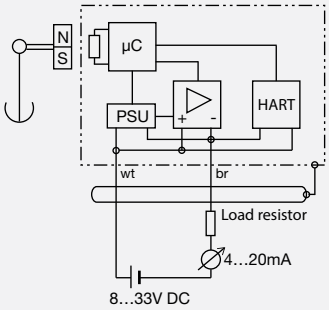

White (wt) = +24V
Brown (br) = 4…20 mA

MECHANICAL DATA

Pendulum damping:	With silicon oil
Mounting position:	Any
Material:	Housing: coated aluminium
Weight:	Approx. 300 g

ENVIRONMENTAL CONDITIONS

Temperature range:	–30 … +70 °C
Humidity:	max. rel. humidity ≤90%, non-condensing
Housing protection:	IP 66 according to EN 60 529
Vibration:	IEC 60 068-2-6, 40 m/s² / 0 … 100 Hz

ELECTRICAL CONNECTIONS

The inclination sensor is connected via a highly exible, shielded signal line with 2 strands and PUR steath. The same is preassembled at the factory, included in the delivery and available in different lenghts.

Cable diameter:	5.9 mm
Conductor cross-section:	2 x 0.34 mm²

DIMENSIONS

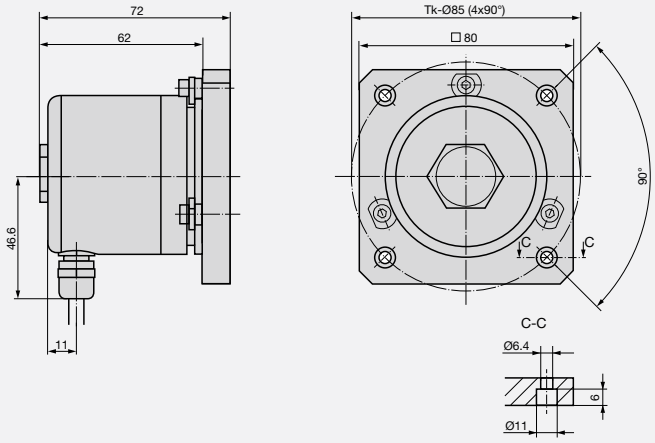

ACCESSORIES

Accessories for transmitters for angular position and inclination transmitters.

PROGRAMMING AND ADDITIONAL CABLES

serve programming of the instruments in connection with the respective configuration software and using a PC.

137 887

141 440

MAIN FEATURES

- Programming operation with or without power supply connection
- Programming of transmitters in standard and Ex version
- Safe galvanic isolation of instrument and PC

Article No.	Description	2W2	WT717
137 887	Programming cable PK610 (Ex)	▪	▪
141 440	Additional cable	▪	▪

PLUG CONNECTOR

MAIN FEATURES

- Straight, field-wired plug
- For simple on-site assembly without soldering

TECHNICAL DATA

Plug connector serie 713 (M12 x 1)		
Article No.	168 105	168 113
Number of poles	5	8
Locking	M12 x 1	
Cable diameter max.	4 … 6 mm	
Connection mode	Screws	
Connection cross section	max. 0.75 mm²	
Mechanical useful life	>500 plugging cycles	
Protection	IP 67	
Temperature range	–40° … +85°	
Rated voltage	125 V	60 V
Rated surge voltage	1500 V	800 V
Rated current (40 °C)	4 A	2 A
Contact pins	CuZn (Brass)	
Contact sleeve	CuSn (Bronze)	
Plug body	PA 66 (UL 94 HB)	
Sleeve body	PA 66 (UL 94 HB)	
Housing cable plug	PBT (UL 94 V-0)	
Dimensions	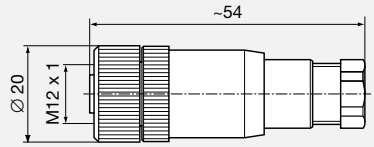	

ADAPTER SLEEVE

Serve to reduce the shaft diameter for the KINAX HW730.

Article No.	Description	Diameter d
168 874	Adapter sleeve KINAX HW730	10 mm/H8
168 882	Adapter sleeve KINAX HW730	12 mm/H8
168 907	Adapter sleeve KINAX HW730	16 mm/H8
171 976	Adapter sleeve KINAX HW730	18 mm/H8
168 915	Adapter sleeve KINAX HW730	20 mm/H8
171 984	Adapter sleeve KINAX HW730	1/2" (12.7 mm)
171 992	Adapter sleeve KINAX HW730	5/8" (15.875 mm)
172 007	Adapter sleeve KINAX HW730	3/4" (19.05 mm)
172 015	Adapter sleeve KINAX HW730	7/8" (22.225 mm)
172 023	Adapter sleeve KINAX HW730	1" (25.4 mm)

MOUNTING-KIT

Article No.	Description
177 354	Mounting-Kit for KINAX 2W2 and KINAX 3W2

KIT OF TORQUE SUPPORT

Are used for mounting and resistance against rotation of the KINAX HW730.

Article No.	Description
169 749	Torque of support set KINAX HW730 (Bracket, pin, screws)

KIT MOUNTING CLAMP

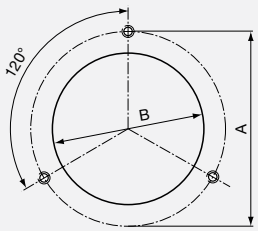

At least three mounting clamps are required to mount angular position transmitters and inclination sensors. The M4 screws are not included in the scope of delivery.

Article No.	Description	A	B
157 364	Kit mounting clamp for KINAX WT720	68	50 F8
168 353	Kit mounting clamp for KINAX N702, N702-CANopen and N702-SSI	66.2	50 F8
168 387	Kit mounting clamp for KINAX 2W2 and 3W2	65	40 F8
172 627	Kit mounting clamp for KINAX N7xx-INOX	66.2	50 F8

MOUNTING ANGLE

Simple mounting option of angular position transmitters using synchroflange. Additional three clamping brackets are required to mount the transmitter on the angle (see mounting clamp kit).

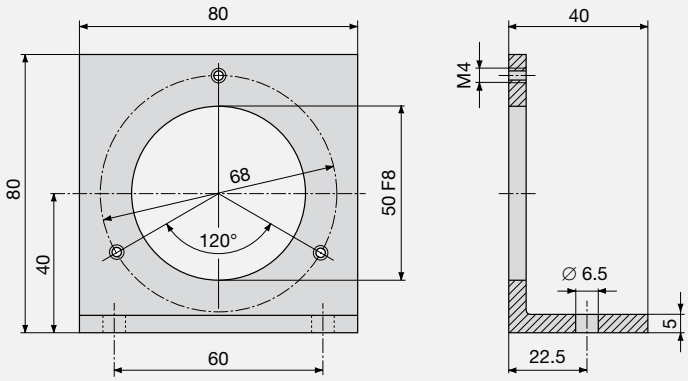

Article No.	Description
168 204	Mounting angle for KINAX WT720

MOUNTING PLATE

To fasten angular position transmitters for robust applications, dia. 58 mm and inclination sensors. Additional three clamping brackets are required to mount the transmitter on the angle (see mounting clamp kit).

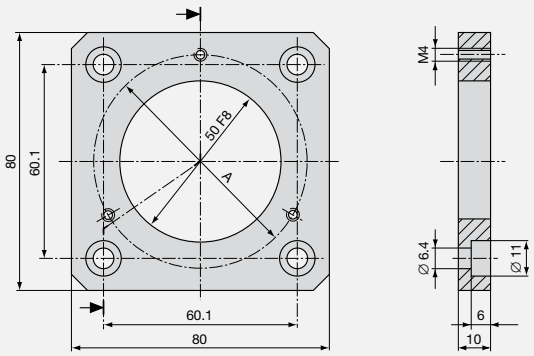

Article No.	Description	A
168 212	Mounting plate for KINAX WT720	68
168 379	Mounting plate for KINAX N702, N702-CANopen and N702-SSI	66.2
172 619	Mounting plate for KINAX N702-INOX	66.2

MOUNTING FOOT

To fasten angular position transmitters for robust applications, dia. >100 mm.

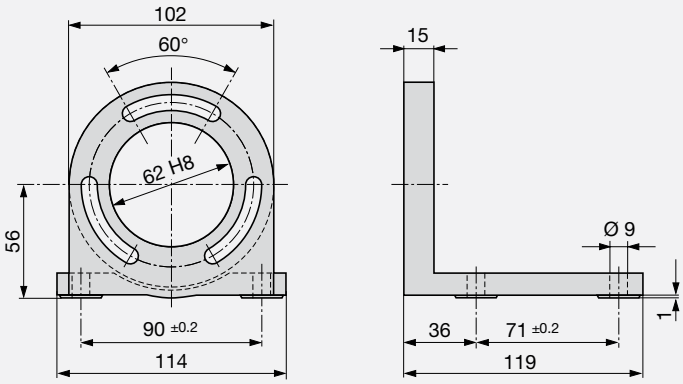

Article No.	Description
997 182	Mounting foot for KINAX WT720/WT707/WT717

MOUNTING FLANGE

To fasten angular position transmitters for robust applications, dia. > 100 mm.

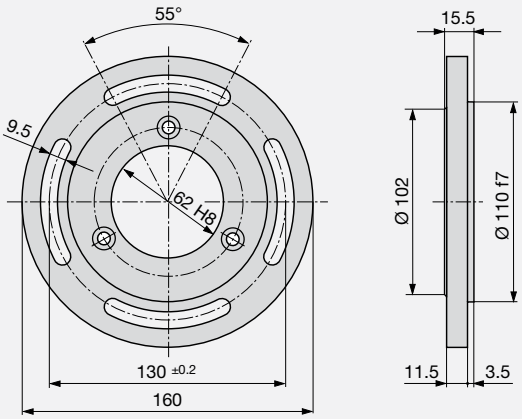

Article No.	Description
997 190	Mounting flange for KINAX WT720/WT707/WT717

BELLOW COUPLING

BKXK1624

BKXK2429

BKXK3030

BKXK4048

MAIN FEATURES

- Backlash-free transmission with angular synchronism
- Optimum compensation of misalignments
- Very high torsion spring stiffness, small retractive force
- Vibration-damping
- Special steel bellow and threaded hubs

TECHNICAL DATA

	Unit	BKXK1624	BKXK2429	BKXK3030	BKXK4048
Max. speed	min^{-1}	10 000	10 000	10 000	5 000
Torque max.	Ncm	40	80	200	10
Max. shaft misalignm. radial	mm	±0.25	±0.25	±0.3	±0.3
Max. shaft misalignm. axial	mm	±0.45	±0.4	±0.4	±0.5
Max. shaft misalignm. angular	Grad	±4	±4	±4	±1.5
Torsion spring stiffness	Nm/rad	85	150	250	350
Radial spring stiffness	N/mm	20	25	80	150
Moment of inertia	gcm^2	2.2	15	37	316
Max. torque screws	Ncm	50	100	100	500
Temperature range	°C	−30...+120	−30...+120	−30...+120	−30...+120
Weight	g	6.5	17	31	92
Material flange		aluminium anodized			
Material bellow		stainless-steel			

ODERDERING DATA

Description		Article No.	d1	d2
BKXK1624	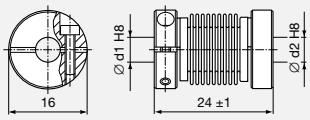	164 715	2	2
		164 723	2	4
		164 731	2	6

ORDERING DATA

BKXK2429	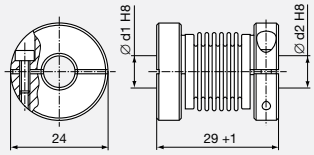	164 757	6	6
		164 765	6	8
		164 773	6	10
		164 781	6	12

ORDERING DATA

BKXK3030	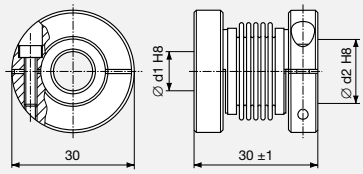	164 799	10	8
		164 806	10	10
		164 814	10	12
		164 822	10	14
		164 830	10	16

ORDERING DATA

BKXK4048	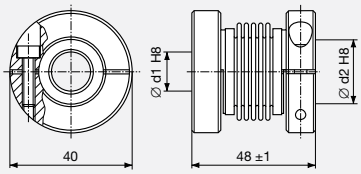	169 690	19	16
		169 707	19	18
		169 715	19	19
		169 723	19	20
		169 731	19	22

HELICAL AND CROSS-SLOTTED COUPLING

WKAK1625

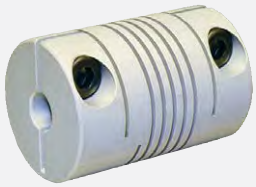

WKAK2532

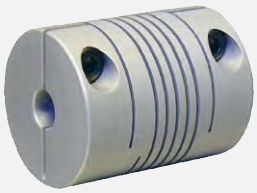

SKAK4048

MAIN FEATURES

- Backlash-free transmission with angular synchronism
- Optimum compensation of misalignments
- Very high torsion spring stiffness, small retractive force
- Vibration-damping
- No moving parts
- Manufactured from one piece with clamping hub for shaft connection without damage

TECHNICAL DATA

	Unit	WKAK1625	WKAK2532	SKAK4048
Max. speed	min^{-1}	6000	6000	5000
Torque max.	Ncm	60	100	1500
Max. shaft misalignm. radial	mm	±0.2	±0.35	±0.3
Max. shaft misalignm. axial	mm	±0.3	±0.5	±0.3
Max. shaft misalignm. angular	Grad	±3.5	±4	±1
Torsion spring stiffness	Nm/rad	5.5	16	335
Radial spring stiffness	N/mm	30	45	230
Moment of intertia	gcm^2	3.8	29	245
Max. torque screws	Ncm	50	100	500
Temperature range	°C	−30...+150	−30...+150	−30...+120
Weight approx.	g	10	34	100
Material flange		aluminium anodized		

ORDERING DATA

Description		Article No.	d1	d2
WKAK1625	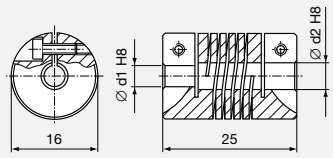	164 848	2	2
		164 856	2	4
		164 864	2	6

ORDERING DATA

Description		Article No.	d1	d2
WKAK2532	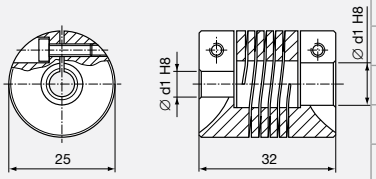	164 872	6	6
		164 880	6	8
		164 898	6	10
		164 905	6	12
		164 913	10	8
		164 921	10	10
		164 939	10	12

ORDERING DATA

Description		Article No.	d1	d2
SKAK4048	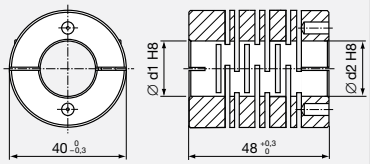	164 947	19	16
		164 955	19	18
		164 963	19	19
		164 971	19	20
		164 989	19	22

SPRING WASHER COUPLING

FSKK3027

FSXK3850

MAIN FEATURES

- Backlash-free transmission with angular synchronism
- Optimum compensation of misalignments
- Very high torsion spring stiffness, middle retractive force
- Vibration-damping
- Electrically isolating, pluggable (only FSKK 3027)

TECHNICAL DATA

	Unit	FSKK3027	FSXK3850
Max. speed	min^{-1}	12000	8000
Torque max.	Ncm	60	200
Max. shaft misalignm. radial	mm	±0.3	±0.8
Max. shaft misalignm. axial	mm	±0.4	±0.8
Max. shaft misalignm. angular	Grad	±2.5	±2.5
Torsion spring stiffness	Nm/rad	30	250
Radial spring stiffness	N/mm	40	12
Moment of intertia	gcm^2	37	106
Max. torque screws	Ncm	80	100
Temperature range	°C	–10...+80	–30...+120
Weight	g	32	63
Material flange		Aluminium eloxiert	
Material diaphragm		Polyamid 6.6	Edelstahl

ORDERING DATA

Description		Article No.	d1	d2
FSKK3027	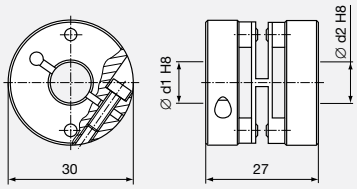	164 997	6	6
		165 002	6	10
		165 010	10	10
		165 028	10	12
		165 036	12	12

ORDERING DATA

Description		Article No.	d1	d2
FSXK3850	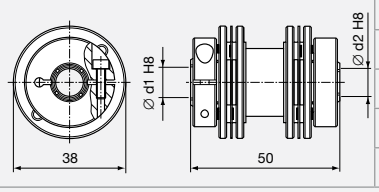	165 044	6	6
		165 052	10	10
		165 060	10	12
		165 078	12	12
		165 086	12	14

IMPORTANT DRIVE SYSTEM VARIABLES

Every electrical machine must be designed for a certain mode of operation which is determined by the designated use of the machine. For example, a motor which continually starts and stops must be designed larger than a motor running with a constant load. In turn, a motor in temporary operation can be designed smaller. The mode of operation must be defined in order not to overload the motor. EN60 034-1 differentiates between the following modes of operation.

CONTINUOUS OPERATION S1

Operation with a constant load sufficient in duration for the to reach the thermic balance. This corresponds to the nominal operation.

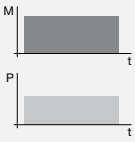

TEMPORARY OPERATION S2

Operation with a constant load not sufficient in duration for the drive to reach the thermic balance.

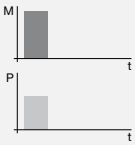

TEMPORARY OPERATION S3

Operation composed of a succession of the same cycles of which each one comprises a time with constant load and an idle time with zero-current windings.

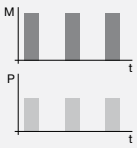

Gear or reduction ration [-]

$$i = \frac{x_1}{x_2}$$

Circumference [mm]

$$U = d \cdot \pi$$

Torque [Nm]

$$M = F \cdot r \qquad M = \frac{9{,}55 \cdot P}{n}$$

Gear torque [Nm]

$$M_{gear} = M_{motor} \cdot i \cdot \eta$$

Work (energy) [Nm = Ws = Joule]

$$W = F \cdot s = m \cdot g \cdot s \qquad W = \frac{J \cdot n^2}{182{,}5}$$

OPERATING RATIO F_B

The operating ratio of a machine results from the impact factor, the average operating time/day and the average number of switching operations/hour. The impact factor results from the mass acceleration factor of the machine.

$$FJ = \frac{Jred}{Jmot} \qquad M_{NUTZ} = f_B \cdot M_{max}$$

Impact factor	FJ	Oper. time hoour/day	Switching per hour < 10	10 … 100	100 … 200	> 200
			Operating ratio f_B			
I - uniform	0 ... 0,2	< 8	0.8	1.0	1.2	1.3
		8 ... 16	1.0	1.2	1.3	1.4
		16 ... 24	1.2	1.3	1.4	1.5
II - moderate impacts	0,2 ... 3	< 8	1.1	1.3	1.4	1.5
		8 ... 16	1.3	1.4	1.5	1.7
		16 ... 24	1.5	1.6	1.7	1.8
III - strong impacts	3 ... 10	< 8	1.4	1.6	1.7	1.8
		8 ... 16	1.6	1.7	1.8	2.0
		16 ... 24	1.8	1.9	2.0	2.1

Type of load	Imp. factor	Examples of load types of gears and gear motors
I	Uniform	Light conveyor screws, fans, assembly belts, light conveyor belts, small agitators, cleaning machines, filling machines
II	Moderate impacts	Hoists, medium-sized agitators and mixers, heavy conveyor belts, sliding gates, wood processing machines, gear pumps
III	Strong impacts	Heavy mixers, shearing machines, presses, centrifuges, punches, stone crushers, vibrators, breakers, rolling mills, bucket conveyors

Performance [W]
stroke motion

$$P = \frac{m \cdot g \cdot v}{\eta}$$

Translation

$$P = F_R \cdot v = \frac{F_R \cdot s}{t} \qquad F_R = \mu \cdot m \cdot g$$

Rotation

$$P = M \cdot \omega = \frac{M \cdot 2\pi n}{60} = \frac{M \cdot n}{9{,}55}$$

Acceleration or deceleration time [s]
Stroke motion

$$t_a = \frac{J \cdot n}{9{,}55 \cdot M_a}$$

Accelaration or deceleration time [1/min]

$$n_{gear} = \frac{n_{motor}}{i}$$

Legend

F	Force [N]
r	Moment arm (radius) [m]
P	Performance [W]
n	Speed [1/min]
s	Distance [m]
m	Mass [Kg]
n	Speed [1/min]
g	Gravity acceleration (9.81) [m/s²]
J	Moment of interia [kgm²]
F_R	Force [N]
v	Velocity [m/s]
η	Efficiency in decimal fraction
μ	Friction coefficient
M	Torque [Nm]
ω	Angular velocity
M_a	Acceleration 7 deceleration torque [Nm]
M_{gear}	Gearbox output axis [Nm]
M_{max}	Perwithted maximum torque
M_{NUTZ}	Effective torque
i	Gearbox reduction
U	Circumference [mm]
d	Shaft diameter [mm]
f_B	Operating ration
F_J	Mass acceleration factor
J_{red}	All external mass moments of inertia reduced to the motor
J_{mot}	Mass moment of inertia of the motors

SELECTION CRITERIA FOR SHAFT COUPLINGS

Manufacturing and assembling tolerances as well as bearing backlash, temperature influences and wearout of shaft bearings cause misalignments between shafts in drive systems and lead to considerable stress on bearings. Consequently, increased wear and significantly shorter runtimes of machines or plants occur. Shaft couplings can compensate these misalignments and reduce the stress on bearings to a minimum.
Three different misalignments occur:

Radial, lateral or parallel misalignment

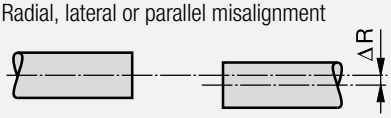

Angular misalignment

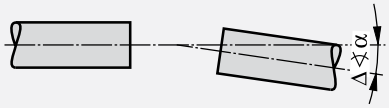

Axial or longitudinal misalignment

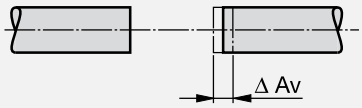

While in backlash-free, torsionally rigid but resiliently flexible shaft couplings axial shaft shifting generates static forces only in the coupling, radial and angular shifting results in alternating stress, retractive forces and torques which can strain the adjacent components, primarily the shaft bearings. Depending on the type of coupling, special attention has to be paid to radial shaft shifting, which must be kept as small as possible. Further useful properties of shaft couplings are the mechanical, thermic and - in some designs - also electric decoupling of the shaft encoder of the drive or machine. To avoid natural resonance and thus the tendency of vibration of the control loop in which the shaft coupling is located, the torsion spring stiffness should be sufficient. Depending on the design principle of the coupling, an increasing torsion spring stiffness unfortunately also causes increased retractive forces. These intensify, as stated above, the bearing load. In principle, this is applicable to the selection of a shaft coupling:

The torsion spring stiffness must be as high as required and the retractive forces as low as possible.

ASSEMBLY INSTRUCTIONS:

1. Check shafts for misalignment.
2. Align couplings on the shafts.
3. Fasten tightening screws/clamping bolts carefully. Avoid excessive fastening.
4. Protect the coupling against damage and excessive bending during assembly.

SELECTION:

In the selection of the correct coupling, the torsion spring stiffness (Ct) of the coupling is decisive. To calculate the torsional angle, the coupling torque must be known. The same results from:

$$Mk = Mmax \cdot K \cdot JK$$

The transfer error by elastic deformation of the flexible part results from:

$$fi = (180 /) \cdot (Mk / Ct)$$

The unit of the torsion spring stiffness (Ct) of shaft couplings is stated physically correct as [Nm/rad]. In small couplings, this unit is frequently also stated in fractions (e.g. [Ncm/rad]). Some providers also refer to “degree” (full circle amounts to 360°) in the denominator.
To get an impression how elastic a shaft coupling is in the direction rotation or how much this coupling twists as a rotatory force bears on it, many mechanics find the “degree” unit more helpful.

The converstion of “rad“ (360° = 2 · · rad) into the more common “degree” unit is thus unavoidable.

If, for example, 200 Nm/rad are to be converted into a “degree value” in the denominator, proceed as follows:

$$200\ \text{Nm/rad} = \frac{200\ \text{Nm}}{\text{rad}} \quad \frac{[1\text{rad} = 360°]}{2\,\pi}$$

Insertion leads to the torsion spring stiffness related to angle degrees:

$$200\ \text{Nm/rad} = \frac{200\ \text{Nm} \cdot 2\,\pi}{360°} = 3.49\ \text{Nm/°}$$

It should be stated that this value [Nm/rad] is extrapolated to the standardised unit, for if a torsionally stiff, resiliently flexible coupling were twisted by an angle of 1 rad (1 rad = 360/2= 57.296°), it would be destroyed.

Legend:

fi =	Torsional angle in degrees
Ct =	Torsion spring stiffness in Nm/rad
Mk =	Coupling torque in Nm
Mmax =	Acceleration torque of the drive
K =	Load factor (2...3)
JK =	Moment of inertia in kgm^2

Questions concerning the selection of couplings

- Which shaft diameters must be connected and which installation space is available for the couplings?
- Is the frictional connection between the encoder shaft and the coupling hub to be achieved via a screw or clamp connection?
- Which is the maximum speed the coupling must be able to transfer?
- Which torque acts on the coupling?
  - Starting torque = break-away torque
  - Starting torque = break-away torque
  - Acceleration value of the drive
- Which maximum lateral, angular and axial misalignment must be offset?
- To which climatic conditions is the coupling exposed?
  - Temperature, moisture, aggressive media, pressure, vacuum
- Is electric insulation required?
- Is the torsional stiffness sufficient for the application?
  - Resolution of the encoder
  - Exact positioning
- Is the coupling in harmony with the control time constant of the control loop?
- Is the coupling available as a serial product also for later replacements at short notice?

ENERGY MANAGEMENT

03

Rising prices for power, gas and water dominate the media. The ZEW energy market barometer reports that 79% of surveyed experts expect a further rise within the next 5 years. Those who have not considered the subject of energy costs, should do this immediately and reduce both the used energy and power supply in a sustaining manner.

Leading institutes and energy consultants see savings potentials of 20%. Experience shows that only the responsible handling of the precious resources or minor investments can achieve savings of 5-10%. Committed companies increase their income in this way, improve their competitiveness and make a valuable contribution to the environment by a CO2 reduction and protection of fossil resources.

Already prior to the involvement of companies and politics in energy management, we, being pioneers in the area of modern energy data acquisition, started the development of the Energy Control System (ECS) which is wide-spread today.

We offer the SMARTCOLLECT software for universal data management with an intuitive operating structure and high-performance extension modules providing a flexible, cost-effective and rapidly implementable solution, particularly for first-time users.

In combination with our instruments, data collectors and meters, a high-performance spectrum is available for individual applications and solutions.

CONTENT

CHAPTER - PAGE	ENERGY MANAGEMENT
03 - 113	Overview
03 - 114	Energy meters
03 - 120	Summation stations
03 - 124	Load optimisation
03 - 125	Current transformers
03 - 129	Energy management software

ENERGY METERS

The energy meters may be used universally for the acquisition and billing of electrical energy in trade, household, industry and building engineering. Data may easily be forwarded to higher-ranking acquisition systems via optional interfaces.
All of the meters are supplied with initial MID calibration and thus approved for billing purposes.

ENERGYMID
EM228x / EM238x
Page 01 - 114

ENERGYMETER
U128x / U138x
Page 01 - 118

SUMMATION STATIONS

The summators of the energy control system collect the meter data via different interfaces, save the same and evaluate it via internal calculation channels.

SMARTCONTROL
Page 03 - 122

SU1604
Page 03 - 123

LOAD OPTIMISATION

Avoid expensive power peaks by using the U1500 load optimising system – flexibly and perfectly tailored to your system.

U1500
Page 03 - 124

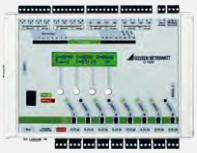

CURRENT TRANSFORMERS

Easy and fast transforming of high alternating currents into safe and measurable currents.

SC
Page 03 - 125

CT300-330
Page 03 - 126

CT200-230
Page 03 - 127

CT100-110
Page 03 - 128

ENERGY MANAGEMENT SOFTWARE

Measured data acquisition, data analysis, energy monitoring and automatic reporting – easy handling, flexibly extendible.

EMC 5.X
Page 03 - 131

SMARTCOLLECT
Page 03 - 132

ENERGY METERS

Configuration	Transformer connection 1 (6) A			Direct connection 5 (80) A	
DESCRIPTION					
2-wire system	U2381			U2281	
3-wire system		U2387			
4-wire system			U2389		U2289
Input voltage					
100 … 110 V		U3	U3		
230 V	U5			U5	
400 V		U6	U6		U6
500 V		U7			
Approval					
MID	P0	P0	P0	P0	P0
MID + calibration certificate	P9	P9	P9	P9	P9
Multifunctional variant / display					
Without	M0	M0	M0	M0	M0
With U, I, P, Q, S, PF, f, THD, I_N	M1	M1	M1	M1	M1
With reactive energy	M2	M2	M2	M2	M2
With U, I, P, Q, S, PF, f, THD, I_N and reactive energy	M3	M3	M3	M3	M3
Pulse output (double)					
Without (only with bus connection)	V0	V0	V0	V0	V0
S0 standard, 1000 pulse / kWh, calibrated [1)]	V1	V1	V1	V1	V1
S0 programmable [1)]	V2	V2	V2	V2	V2
230 V standard, 1000 pulse / kWh, calibrated [1)]	V3	V3	V3	V3	V3
230 V programmable [1)]	V4	V4	V4	V4	V4
S0 130 ms, 1000 pulse / kWh, calibratable [1)]	V7	V7	V7	V7	V7
S0 130 ms, 1000 pulse / kWh, calibratable [1)]	V8	V8	V8		
S0 customised, calibrated [1)]	V9	V9	V9		
Bus connection					
Without (only with pulse output)	W0	W0	W0	W0	W0
LON	W1	W1	W1	W1	W1
M-bus	W2	W2	W2	W2	W2
Modbus TCP / BACnet	W4	W4	W4	W4	W4
Modbus RTU	W7	W7	W7	W7	W7
Transformer conditions					
CT=VT=1; main display secondarily calibrated	Q0	Q0	Q0		
CT, VT programmable (CTxVT ≤ 100'000); auxiliary display secondarily calibrated	Q1	Q1	Q1		
CT, VT firmly set; main display primarily calibrated	Q2	Q2	Q2		
Load profile					
With load profile (only with bus connection)	Z1	Z1	Z1	Z1	Z1

[1)] In transformer meters U238x with Q9, the pulse rate is issued in relation to the primary side.

Extensive Initial Calibration at the Factory
The meters comply with the MID directive which is valid throughout Europe and in Switzerland, and are shipped with initial factory calibration. They can be used immediately for billing purposes. Lead-times and costs are reduced as a result. Conformity assessment is conducted in accordance with modules B and D, and a declaration of conformity is included in the operating instructions.

Meter and calibration from the same source
Gossen Metrawatt has a state registered test office for electric instruments and is authorized to recalibrate energy meters for the German market.

Calibration mark

ENERGYMID EM2281, EM2289, EM2381, EM2387, EM2389

Multifunctional energy meters for 2-, 3-, 4-wire system with 5 (80)A direct or 1 (6)A transformer connection (also contains 5 (6) A).

U2281, U2381

2-wire system

U2387

3-wire system

U2289, U2389

4-wire system

CUSTOMER BENEFIT

HIGHER FLEXIBILITY – perfectly adapted to your measuring task

- 5 (80) A direct or 1 (6) A transformer connection
- Multifunctional variant – up to 33 further measured values, e.g. reactive power, apparent power, power factor or frequency
- Measurement of energy supply and energy delivery due to 4 quadrant measurement
- Cost-effective mains monitoring by THD acquisition for current and voltage as well as neutral conductor current I_N
- Optionally integrated load profile with 96 registration periods/day, 60 days with event logger (e.g. overvoltage or change of CT/VT values)
- 8 tariff inputs adaptable to future tariff structure in the energy market: 4 tariffs (hardware-controlled as standard) with bus additional 4 tariffs (software-controlled)

ADDITIONAL SPACE AVAILABLE – for even more functions in the distributor/control cabinet

- More distributor space due to ultra-compact design with only 4 HP (72mm) space requirement
- Integrated interface to connect to acquisition and optimising systems
- Protection against contamination due to optimised housing
- Integrated illuminated display to read parameters and settings
- Protection against manipulation by sealable cover and parameter lock

RAPID INSTALLATION – for correct installation and immediate availability

- Faster installation due to fault detection with colour change on the display
- Easy fault detection by installation parameter monitoring, e.g. phase sequence or reverse polarity of transformers
- Fast integration and programming using sophisticated software tools
- Varied fast assembly in any mounting position on 35 mm top hat rail

HIGHER COST-EFFECTIVENESS – low purchase costs, quality »made in Germany»

- Low purchase costs due to completely new design and optimised production
- Immediately available for billing purposes due to first calibration according to MID ex factory
- Extremely long serviceable life due to the design with assemblies of the highest quality
- Produced in Germany according to the strictest quality criteria
- Warranty 3 years

PERFECT INTEGRATION – for fast communication with the most varied systems

- Flexible communication and remote readout via integrated interface
- Versatile connection via LON, M-bus, Modbus RTU, Modbus TCP or BACnet
- Integrated web server (Modbus TCP variant)
- Software tools for fast integration and parameterising

APPLICATION

The calibrated energy meter may be used to acquire and bill active energy in industry, household, trade and building engineering. The values are transferred to acquisition, billing and optimising systems as well as building automation and control systems via a pulse output or bus interfaces. The installation is absolutely easy because the meter recognises connection errors and indicates the same immediately. If more of the mains parameters are required, the functionality can be adapted to the measuring task in a flexible manner.

LonWorks Modbus ETHERNET M-Bus BACnet

TECHNICAL DATA

Measuring input:	Nominal voltage 100V … 500V Nominal frequency 50 Hz Direct: Nominal current 5(80)A Transformer: Nominal current 1(6)A (also contains 5 (6)A)
Mains:	2-conductor alternating current, 3-conductor or 4-conductor rotary current
Measured variables:	Active energy (supply and delivery), reactive energy optional, star and delta voltage, current per phase, N-conductor current I_N, active, reactive, apparent power, power factor, frequency, effective value of distortion THD U/I
Display:	LCD with 8-digit main display and auxiliary displays with LED illumination
S0 output (double):	Pulse output according to EN 62053-31
Interface:	Optional LON, M-bus, Modbus TCP, BACnet or Modbus RTU
Accuracy:	Active energy Class B according to DIN EN 50470-3 Reactive energy Class 2 according to DIN EN 62053-23
Approval:	EU Directive 2004/22/EG for measuring instruments (MID)
Assembly:	DIN rails according to EN 50 022

PREFERRED TYPES

With MID approval and first calibration available on stock

Direct connection 5 (80) A, Class B, MID for 4-wire system, 3x 230 / 400 V	Characteristic	Standard (M0)	Multifunctional variant (M1)
S0 pulse rate programmable	V2, P0, U6	U2289-V012	U2289-V022
LON	W1, P0, U6	U2289-V013	U2289-V023
M-Bus	W2, P0, U6	U2289-V014	U2289-V024
Modbus TCP / BACnet	W4, P0, U6	U2289-V017	U2289-V027
Modbus RTU	W7, P0, U6	U2289-V018	U2289-V028

Transformer connection 5 (6) A and 1 (6) A, Class B, MID for 3-wire system, 3x 230 / 400 V, CT / VT programmable	Characteristic	Standard (M0)	Multifunctional variant (M1)
S0 pulse rate programmable	V2, P0, U6, Q1	U2387-V012	U2387-V022

Transformer connection 5 (6) A and 1 (6) A, Class B, MID for 4-wire system, 3x 230 / 400 V, CT / VT programmable	Characteristic	Standard (M0)	Multifunctional variant (M1)
S0 pulse rate programmable	V2, P0, U6, Q1	U2389-V011	U2389-V021
LON	W1, P0, U6, Q1	U2389-V015	U2389-V025
M-Bus	W2, P0, U6, Q1	U2389-V016	U2389-V026
Modbus TCP / BACnet	W4, P0, U6, Q1	U2389-V017	U2389-V027
Modbus RTU	W7, P0, U6, Q1	U2389-V018	U2389-V028

ACCESSORIES

Installation set for door mounting U270B
Cable type current transformer, see page 03 - 125
Bushing type current transformer, see page 03 - 127
Wound type current transformer, see page 03 - 128

Description						
Active energy meter for 2-wire system, direct, class 1 (resp. B)		U1281				
Active energy meter for 4-wire system, direct, any load, Class 1 (resp. B)			U1289			
Active energy meter for 2-wire system, Transformer, Class 1 (resp. B)				U1381		
Active energy meter for 3-wire system, Transformer, any load, Class 1 (resp. B)					U1387	
Active energy meter for 4-wire system, Transformer, any load, Class 1 (resp. B)						U1389
System frequency	50 Hz	F0	F0	F0	F0	F0
External auxiliary voltage 24 V DC	without	H0	H0	H0	H0	H0
	with	H1	H1	H1	H1	H1
Multifunctional design	without	M0	M0	M0	M0	M0
	with	M1	M1	M1	M1	M1
	without + reactive energy	M2	M2	M2	M2	M2
	with + reactive energy	M3	M3	M3	M3	M3
Rated value of input voltage Ur	100–110 V	–	–	–	U3	U3
	230 V	U5	–	U5	–	–
	400 V	–	U6	–	U6	U6
	500 V	–	–	–	U7	–
Approvals	MID	P8	P8	P8	P8	P8
	MID + calibration certificate	P9	P9	P9	P9	P9
Pulse output						
can be calibrated, 1000 pulses/kWh	S0 standard	V1	V1	V1	V1	V1
Rate programmable	S0 programmable	V2	V2	V2	V2	V2
Switching output up to 230 V, 1000 pulses/kWh, can be calibrated (not possible with Feature H1)	Pulse 230 V standard	V3	V3	V3	V3	V3
Switching output up to 230 V, rate programmable (not possible with Feature H1)	Pulse 230 V programmable	V4	V4	V4	V4	V4
can be calibrated, 100 pulses/kWh	S0 130 ms, 100 Imp./kWh	V7	V7	V7	V7	V7
can be calibrated, 1000 pulses/kWh	S0 130 ms, 1000 Imp./kWh	–	–	V8	V8	V8
can be calibrated, 2000, 5000, 10 000 pulses/kWh	S0 customized	–	–	V9	V9	V9
Bus connection	without	W0	W0	W0	W0	W0
	LON	W1	W1	W1	W1	W1
	M-Bus	W2	W2	W2	W2	W2
	L-Bus	W3	W3	W3	W3	W3
Transformer ratios						
Current/voltage fixed, main display can be calibrated	CT=VT=1	–	–	Q0	Q0	Q0
Current/voltage programmable, secondary display can be calibrated	CT, VT programmable	–	–	Q1	Q1	Q1
Current/voltage fixed, main display can be calibrated CT=1…10000, VT=1…1000, CTxVT ≤ 1 million	CT, VT fixed	–	–	Q9	Q9	Q9

Extensive Initial Calibration at the Factory
The meters comply with the MID directive which is valid throughout Europe and in Switzerland, and are shipped with initial factory calibration. They can be used immediately for billing purposes. Lead-times and costs are reduced as a result. Conformity assessment is conducted in accordance with modules B and D, and a declaration of conformity is included in the operating instructions.

Meter and calibration from the same source
Gossen Metrawatt has a state registered test office for electric instruments and is authorized to recalibrate energy meters for the German market.

EBY
8
17
Calibration mark

Bayerisches Landesamt für Maß und Gewicht

Staatliche Anerkennung einer Prüfstelle für Messgeräte für Elektrizität

Das Bayerische Landesamt für Maß und Gewicht hat mit Bescheid vom 20.12.2016, Geschäftszeichen: 14-2016-EBY8 die Prüfstelle bei dem Träger

GMC-I Messtechnik GmbH
Südwestpark 15
90449 Nürnberg

gemäß den Vorschriften des Mess- und Eichgesetzes erkennt anerkannt.

Die Prüfstelle führt die Bezeichnung

Staatlich anerkannte Prüfstelle für Messgeräte für ELEKTRIZITÄT

bei dem Träger der Prüfstelle GMC-I Messtechnik GmbH, 90449 Nürnberg.

Die Befugnis der Prüfstelle erstreckt sich auf die Eichung und Nachprüfung folgender Messgerätearten

- Elektrizitätszähler

Einzelheiten der Anerkennung sind in dem Bescheid festgelegt.

Die Prüfstelle führt nachstehendes Kennzeichen

München 20.12.2016

Siegfried Kurz

U1281, U1381, U1387, U1289, U1389

Electronic active energy meters with power display.

U1281, U1381

Alternating current, 2-wire system

U1387

Three-phase current, 3-wire system

U1289, U1389

Three-phase current, 4-wire system

Acquisition of active energy in 4-wire three-phase systems according to DIN EN 50470-3.

CUSTOMER BENEFIT

- Precise active energy measurement class B per DIN EN 50470-3
  Reactive energy class 2 per DIN EN 62053-23
- Cost savings thanks to initial calibration at the factory, in accordance with MID, conformity evaluation procedure module B+D
- Display of instantaneous power
- Extendable for additional system measurement variables
- Direct connection 5(65) A, without additional current transformers
- Transformer connection 5//1 A
- Transformer ratios can be set and calibrated
- Variant for 60 Hz system frequency available
- Display of installation errors without additional measuring equipment
- Pulse output S0 or 230 V
- Adjustable pulse rate and pulse duration
- Compact design requires little space
- Optional LON, M-bus, L-bus interface
- Optional reading while electrical circuit is switched off

APPLICATION

The energy meters may be universally used for the acquisition and billing of electrical energy in trade, household, industry and building management applications. Momentary circuit loads can be evaluated at any time using the additional instantaneous power display. Variants for direct connection (U1281, U1289) are designed for currents up to 65 A without the installation of additional current transformers. The variants for transformer connection (U1381, U1387, U1389) may be connected both to x/1 A and x/5 A current transformers.

Integrated error recognition for incorrect rotary field direction, missing phases, reverse-poled current transformers, measuring range overloads and missing bus connections saves valuable time and test equipment during troubleshooting.

MORE TRANSPARENCY IN OPERATION

In addition to active energy and instantaneous power, the multifunctional variant (M1) also displays individual currents, voltages, active, reactive and apparent power, power factors and frequency by simply pressing a key. Voltage level, phase utilization, reactive power component and compensation can thus be continuously evaluated during operation.

UNIVERSAL BUS CONNECTION

The energy meters transwith meter readings and other data to data logging, billing and optimizing systems, as well as building automation and control technology applications, via optional interfaces.

- LON interface with FTT-10A transceiver (W1)
- M-Bus interface according to EN 1434-3 (W2)

DIVERSE CALIBRATION CAPABILITY – APPROVAL FOR OFFICIAL BILLING

According to legal requirements, the calibration certificate may not show any deviation in measurement. Depending upon requirements, the following variants are possible:

- Calibrated main display for primary energy, calibrated pulse output with reference to primary energy and a fixed pulse rate of 1000 pulses/kWh (V1, V3) – directly measuring variant
- Calibrated main display for primary energy, transformer ratios stated upon ordering are fixed (Q9) and calibrated, calibrated pulse output with reference to primary energy and a fixed pulse rate depending on CTxVT (V1, V3)
- Calibrated main display for secondary energy, fixed transformer ratios CT=VT=1 (Q0), calibrated pulse output with reference to secondary energy and a fixed pulse rate of 1000 pulses/kWh (V1, V3)
- Uncalibrated main display for primary energy, adjustable transformer ratios (Q1) in combination with a calibrated ancillary display for secondary energy, calibrated pulse output with reference to secondary energy and a fixed pulse rate of 1000 pulses/kWh (V1, V3)

METER READING AND BUS OPERATION WHILE THE ELECTRIC CIRCUIT IS SWITCHED OFF

The meter can be optionally equipped with a 24 V DC auxiliary power input (H1) for assured discharge-free voltage, which allows for direct meter reading, or remote meter reading for bus compatible variants, even when the electrical circuit is switched off. The use of a UBAT-24V battery pack perwiths meter readings without continuously active supply power.

TECHNICAL DATA

Measured input:	Nominal voltage 100 – 110 V (L – L), 230 V (L – N), 400 V (L – L), 500 V (L – L) Nominal frequency 50 Hz or 60 Hz Direct: Nominal current 5(65) A Transformer: Nominal current 1(6) A and 5(6) A
System configuration:	2-wire alternating current, 3-wire or 4-wire three-phase alternating current
Measured variables:	Active energy and instantaneous power in standard variants; currents, voltages, active, reactive, apparent power, power factor, frequency optional
Display:	LCD, 7-digit main display, 8-digit ancilliar display
S0-output:	Pulse output according to EN 62 053-31 or 230 V Pulse rate and pulse duration fixed or adjustable
Interface:	Optional LON, M-bus
Accuracy:	Active energy class B per DIN EN 50470-3 Reactive energy class 2 per DIN EN 62053-23
Approval:	EU Directive 2004/22/EG for measuring instruments (MID)
Assembly:	DIN rails according to EN 50 022

STOCK VARIANTS

Energy meter for direct connection 5 (65) A, class B (or 1)

Article No.	Description
U1289-V011	4-wire system, 3 x 230/400 V, S0, 1000 Pulsee/kWh
U1289-V012	4-wire system, 3 x 230/400 V, S0, pulse rate programmable
U1289-V013	4-wire system, 3 x 230/400 V, S0, pulse rate programmable, LON
U1289-V014	4-wire system, 3 x 230/400 V, S0, pulse rate programmable, M-Bus

Energy meter for transformer connection 5 (6) A and 1 (6) A, class B (or 1)

Article No.	Description
U1387-V011	3-wire system, 3 x 100 V, 1 (6) A, S0, CT/VT/pulse rate programmable
U1387-V012	3-wire system, 3 x 400 V, 1 (6) A, S0, CT/VT/pulse rate programmable
U1389-V011	4-wire system, 3 x 230/400 V, 1 (6) A, S0, CT/VT/pulse rate programmable
U1389-V012	4-wire system, 3 x 230/400 V, 1 (6) A, S0, 1000 pulses/kWh, CT=VT=1
U1389-V013	4-wire system, 3 x 230/400 V, 1 (6) A, S0, pulse rate programmable, CT=VT=1, LON
U1389-V014	4-wire system, 3 x 230/400 V, 1 (6) A, S0, 1000 pulses/kWh, CT=VT=1, LON
U1389-V015	4-wire system, 3 x 230/400 V, 1 (6) A, S0, CT/VT/pulse rate programmable, M-Bus
U1389-V016	4-wire system, 3 x 230/400 V, 1 (6) A, S0, CT/VT/pulse rate programmable, LON-Bus

ACCESSORIES

Installation set for door assembly U270A
Split-core current transformers, see page 03 - 125
Plug-on current transformers, see page 03 - 127
Winding current transformer, see page 03 - 128

SUMMATION STATIONS

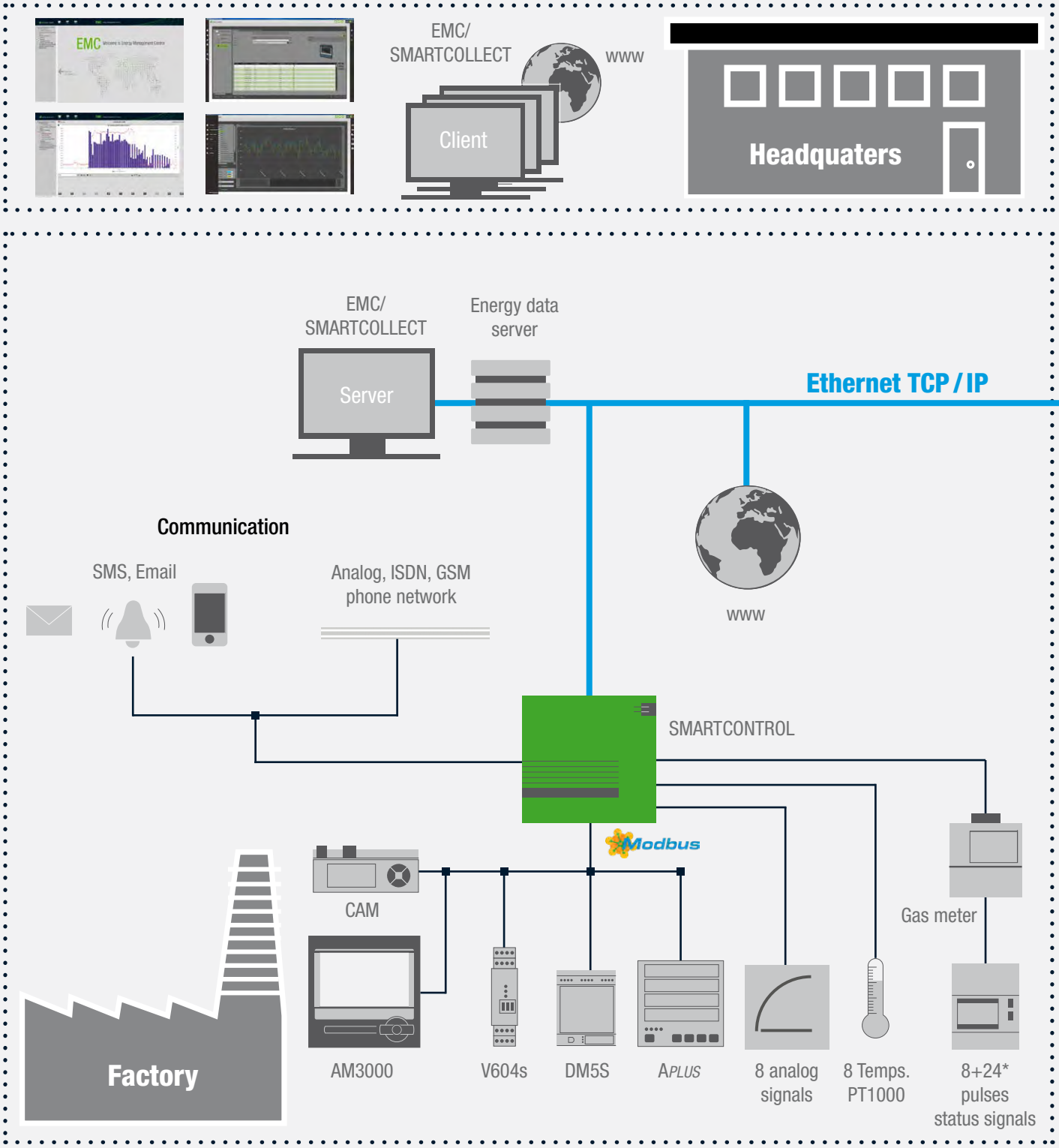

*optional

Cost-effective installation of networks over large distances is an important factor and must be taken into consideration during the system planning phase. Maximum system size and response time are determined by the transmission medium, as well as by network topology.

The ECS makes it possible to transwith consumption data at the acquisition level via numerous bus systems (LON, Modbus TCP / RTU, M-Bus). And thus within the factory environment, robust and interference-resistant bus systems like LON can be used, whereas the system is implemented with a typical building bus such as the M-Bus in office buildings.

The data loggers are networked via Ethernet TCP/IP or Modbus TCP. Linking to the management system is also implemented via Ethernet TCP/IP or by wireless connection, i.e. GSM/GPRS. This option also makes it possible to transwith data into the system from remote locations which are not integrated into the company network.

The management software evaluates and processes the collected data. Several users can gather any required data simultaneously with a browser via an intranet or the Internet. The integrated user administration function controls specific access privileges. And thus the energy manager or administrator has comprehensive access, whereas controlling and general management only receive prepared information and reports which are important to them.

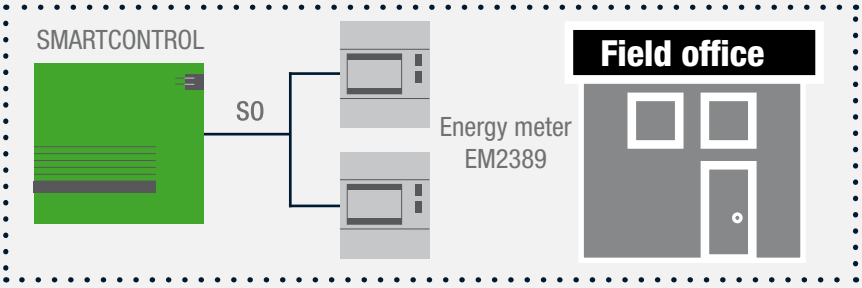

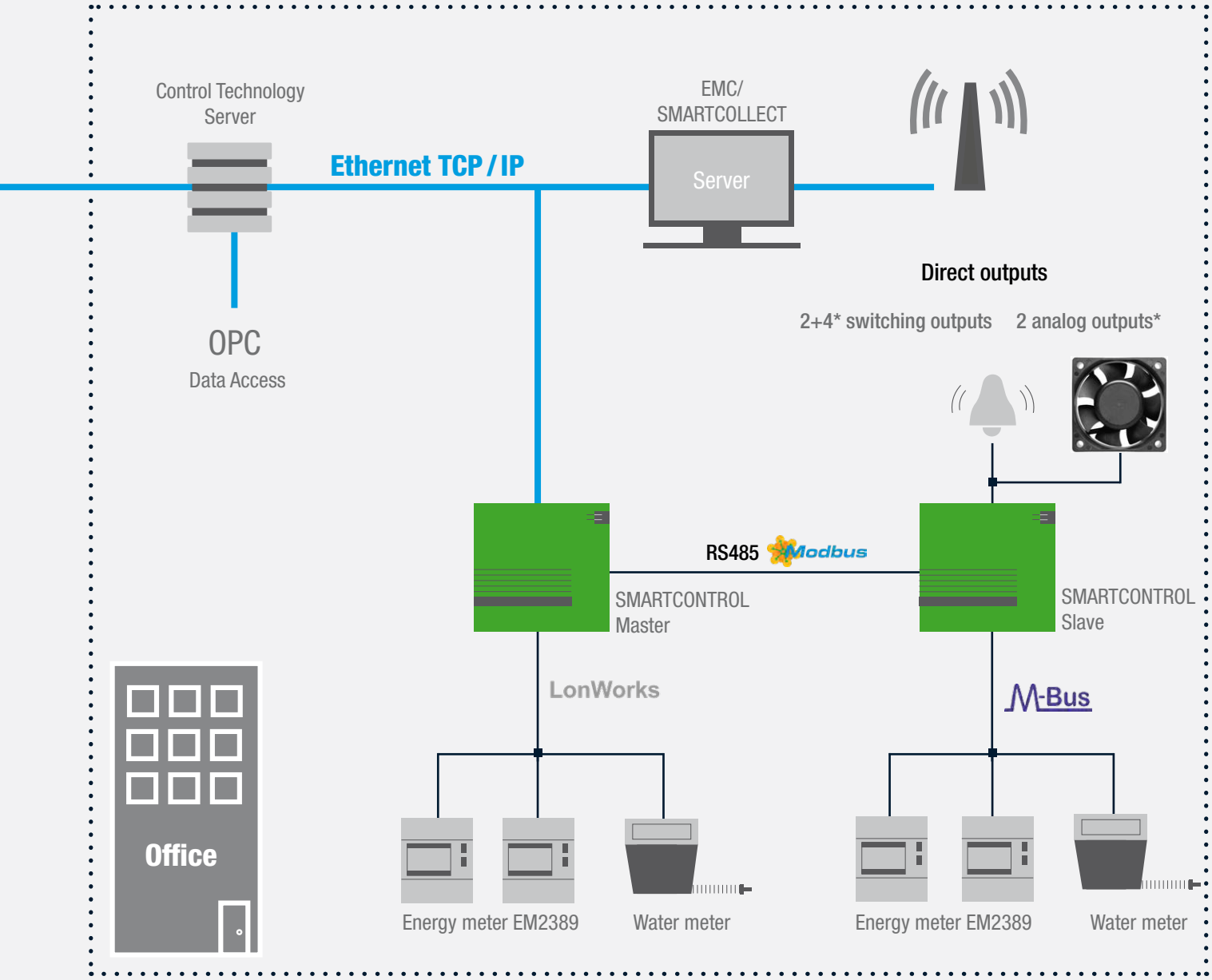

*optional

SMARTCONTROL

U300A

U300 A

SMARTCONTROL manager

CUSTOMER BENEFIT

- Acquisition of energy and consumption data, temperatures, switching statuses and process variables
- Error message management, continuous comparison of characteristic values and indication of errors via switching output, e-mail or SMS
- Peak load management in combination with switching outputs
- Timer programs and switching of relays after the occurrence of predefined events
- Calculation of mean values and integrals, as well as heat and cold quantities
- SMARTCONTROL manager configuration and data read-out software included in the scope of delivery

APPLICATION

The multitalented SMARTCONTROL supplements the Energy Control System (ECS) which is widespread in industry and building technology. It unites energy and consumption data logging for a wide variety of media with load management and error messaging functions.

The versatile data collector can acquire directly meter readings, temperatures, statuses and analog signals via existing inputs. The connection of bus-compatible instruments or energy meters is effected by Modbus via M-Bus with an optional level converter or via the opional LON interface.

The different parameters and functions of SMARTCONTROL are defined via SMARTCONTROL manager and its graphic programming surface.

SMARTCONTROL is integrated into existing infrastructures via Ethernet TCP/IP. An OPC server is available for an easy connection to process and building control systems.

Using the Modbus TCP version multiple SMARTCONTROL stations can be networked. This offers as well the possibility to define a master station, which serves as a data central. Within this central all relevant data of the complete network can be acquired, saved and provided to superior systems.

TECHNICAL DATA

Inputs:	8 digital inputs, adjustable to active or passive 8 analog inputs 0 – 20 mA or 0 – 10 V, adjustable 8 temperature inputs for Pt1000 sensors Option input/output module for 24 channels: 24 digital inputs, active or passive setting possible
Outputs:	2 semiconductor relays max. 40 VDC/AC, 1 A Option input/output module for 24 channels: 4 semiconductor relays* max. 40V DC/AC, 1A 2 analog outputs* 0-20mA or 0-10V setting possible * can be configured individually instead of a digital input
Interfaces:	Ethernet TCP/IP 10/100 Mbit, Modbus-RTU, RS485, M-Bus over RS232 with optional level converter, slot for level converter (80 slaves) integrated by default, 2 x RS232 for fieldbus devices Option LON interface module: LON, FTT-10 A, 78 kBit/s
Memory:	2 MB flash, optional 2 GB microSD memory card
Power supply:	12 – 24 V DC, optional pluggable power pack, see accessories
Dimensions:	225 x 210 x 70 mm

ACCESSORIES

Pluggable power pack 100 – 240 VAC / 24 VDC / 24 W	Z301U
LON extension set **	Z301V
IO24 input /output module for 24 channel extension set **	Z301W
M-Bus level converter for 80 devices, on board slot *	Z301Y

* Requirement: SMARTCONTROL starting Rev. V3
** Requirement: SMARTCONTROL basic PCB starting Rev. 2.3x

For further accessories see data sheet and price list.

STOCK VARIANTS

Article No.	Description
U300A	SMARTCONTROL standard
U300C	SMARTCONTROL control cabinet IP 65 with 24 VDC power pack
U300D	SMARTCONTROL standard with I/O24
U300E	SMARTCONTROL standard with LON
U300F	SMARTCONTROL standard with I/O24 and LON
U300G	SMARTCONTROL standard with modbus TCP

SUMMATION STATION

SU1604

CUSTOMER BENEFIT

Summators acquire meter data via different interfaces and evaluate them via internal processing channels. The thus determined values for energy or consumption are summated synchronously to the measuring interval of the power utility over predefined time periods and a programmable interval and are stored together with the respective maximum values. Using this autonomous energy database, all electrical and non-electrical energy and consumption values can be acquired, visualised, optimised and billed in relation to cost centres.

- New modular concept
- Software downwardly compatible with U1600/1/2/3 summators
- 64 processing channels to determine energy, power and costs.
- Physical inputs (up to 64) or LON meters can be assigned as required
- Energy Control Language (ECL) to program analysis, monitoring and optimising applications

APPLICATION

The summator may be modularly extended up to 54 processing channels. This permits the channel assignment of both electrically isolated S0 counter inputs to process pulsed S0 input signals and LON devices via the easy-to-wire, polarity reversal-protected and electrically isolated LON interface of the summator.

All relevant energy and power consumption data is acquired for defined periods of time and a programmable interval and stored as load profiles with pertaining maximum values. In addition, up to four recorders with max. 64 channels and different time bases starting with one second may be defined. For each channel, any data (analogue values, power values, consumption values in the interval and also total meter readings) can be selected and stored.

Apart from an RS485 and an RS232 interface, the summator is equipped with an Ethernet interface which permits the remote access of device data via a TCP/IP network. ECS-LAN integration can also be realised (ECS-LAN via COM).

Due to the integrated high-level intelligence and ECL (Energy Control Language) programming language, the SU1604 summator is also suitable for customer-specific calculations, analyses, monitoring and optimising.

TECHNICAL DATA

Interfaces:	LON interface for 64 LON devices 1 RS232 interface (max. 921 kBaud) 1 RS485 interface (max. 921 kBaud, half duplex) 2. ECS-LAN interface (max. 375 kBaud) Ethernet interface (100 MBit/s) with ECL access via TCP/IP (4 sockets)
Assembly:	on top hat rail according to EN 50022 / 35 mm
Memory:	128MB flash memory; 4MB MRAM
Outputs:	2 S0 semiconductor relays, 50 V DC max., 200 mA, bipolar
Power supply:	optional per U1614 power pack
Dimensions:	basic module: 100x45x114 (HxWxD)

STOCK VARIANTS

Article No.	Description
U1604	SU1604 basic module
U1614	SU1614 power pack for SU1604
U1624	SU1624 pulse acquisition module

ACCESSORIES

Z302U: SU1604 terminal package
Z302T: SU1604 T-bus terminal package
Z302V: SU1604 programming cable

U1500

LOAD OPTIMISATION

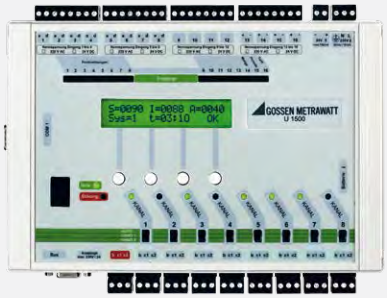

System to reduce power peaks, extendable in steps from 8 to 64 optimising channels.

CUSTOMER BENEFIT

- Minimum interference in the production process due to the combined trend-extrapolation process
- Simultaneous optimising of different media
- Future-oriented setpoint management specifying the load profile for 7 days with 96 values each
- Inputs for operating feedback from the consumers
- Takes minimum and maximum making and breaking times of the power consumers into consideration
- Special control programs for kitchen optimisation

APPLICATION

Electrical power prices for customers with special contracts consist of energy costs (in EUR per kWh) for current consumption, and power costs for the maximum power value (in EUR per kW). A reduction of power peaks can reduce costs considerably.
Power optimisation assumes that the start-up of consumers which draw large amounts of power can frequently be postponed a few minutes without significantly affecting operations. This applies, in particular, to power consumers which are capable of storing energy to a certain extent, e.g. heaters and refrigerators. Integrated time switching programs can lower the energy costs and optimise operational procedures. The system can also be used for cost-oriented control of consumers which require other forms of energy, e.g. gas.

TECHNICAL DATA

Inputs:	16, individually switchable 24 V DC or 230 V AC, with potential-isolated in two groups
Outputs:	9 relays changer, 250 V AC max. 2 A, power supply 24 V DC, max. 100 mA
Power supply:	230 V AC, 50 Hz, max. 15 VA
Dimensions:	240 x 160 x 60 mm
Assembly:	DIN rails according to 50 022

STOCK VARIANTS

Article No.	Description
U1500 A0	Optimising computer for 8 channels
U1500 A1	Optimising computer for 8 channels, extendable via system bus
U1500 A2	System extension for 8 channels

ACCESSORIES

PC software configuration Z302C
PC software online display Z302D
PC software graphic data analysis Z302B

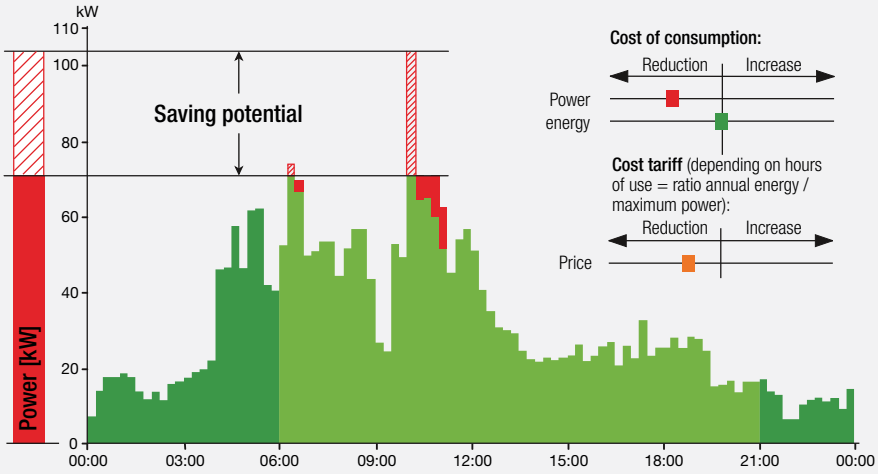

SC 30 / SC 40-B / SC 40-C / SC 50-E

Split-Core Current Transformers

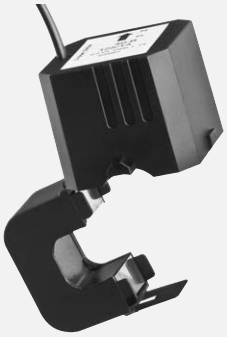

Fast retrofitting of energy meters without interrupting the mains power supply thanks to split-core current transformers

CUSTOMER BENEFIT

- Converts high amperage AC current into safe, measurable current
- Very easy and time-saving installation thanks to split-core design
- Compact design allows for use in areas with restricted access and confined space
- Particularly suited for retrofit purposes since the dismantling of primary leads is not necessary
- Allows for retrofitting without interrupting mains power supply
- Clearly audible click sound confirms proper installation – additional safety is provided by UV proof cable ties
- Accuracy class: 0.5, 1 or 3, depending on type

APPLICATION

Current transformers convert high amperage AC current of up to 1000 A (primary current) into small, safe, measurable current of 1 A or 5 A (secondary current). Thanks to their compact design, the split-core current transformers are especially suited for use in areas of restricted access and confined space. The separable core makes it easier to install the transformers on cables or rails.
The split-core current transformers are the right choice when an interruption of the electrical circuit is difficult or a measuring instrument has to be easily and quickly refitted.

The safe installation of the primary lead in the current transformer is guaranteed by the mechanical design and is confirmed by a distinctly audible click sound. Two UV proof cable ties, which are part of the standard equipment, help to fix the transformer additionally.

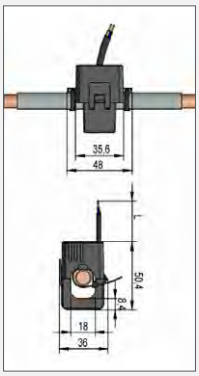

SC30

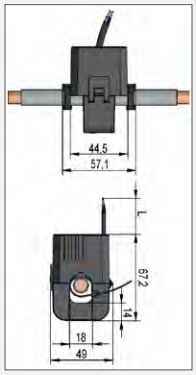

SC 40-B

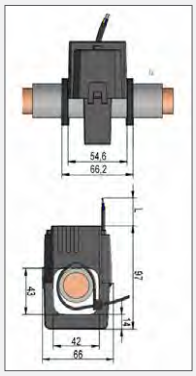

SC 50-E

Technical data	SC 30	SC 40-B	SC 40-C	SC 50-E
Max. Cable diamter	**18 mm**	**18 mm**	**28 mm**	**42 mm**
Secondary current 1 A				
Primary current	60 A … 250 A	100 A … 250 A	200 A … 500 A	250 A … 1000 A
Cable lenght	3 m	3 m	3 m	5 m
Class (depending on type)	1 or 3	0.5 or 1	0.5 or 1	0.5 or 1
VA	0.2	0.2	0.2	0.5
Secondary current 5 A				
Primary current		150 A … 250 A	250 A … 500 A	300 A … 1000 A
Cable lenght		0.5 m	0.5 m	3 m
Class (depending on type)		0.5 or 1	1	0.5 or 1
VA		1	1	0.5

Description	Class	Primary current A	Secondary current A	VA	Article No.
SC30, cable opening diameter 18 mm	3	60	1	0.2	U118A
	…*	…*	…*	…*	…*
	1	250	1	0.2	U118G
SC40-B, cable opening diameter 18 mm	1	100	1	0.2	U118H
	…*	…*	…*	…*	…*
	0.5	250	5	1	U518C
SC40-C, cable opening diameter 28 mm	1	200	1	0.2	U128A
	…*	…*	…*	…*	…*
	1	500	5	1	U528D
SC50-E, cable opening diameter 42 mm	1	250	1	0.2	U142A
	…*	…*	…*	…*	…*
	0.5	1000	5	0.5	U542G

* for further stock variants see price list "Industrial Measuring and Control Technology"

SIRAX CT300-CT330

Split-Core Current Transformers

CT330 CT320 CT310 CT300

CUSTOMER BENEFIT

- Safe housing with high flame protection
- Tampering protection due to sealable covers
- Contamination protection due to closed housing
- Separable coil body
- Additional locking protection prevents accidental opening
- Large selection of nominal sizes and dimensions
- Easy and fast assembly due to separable cores
- Safe connection technology via screw terminals
- Ideal for retrofitting in existing facilities without any interruption of the current supply
- Different assembly options, e.g. wall, cable, bus bar or top hat rail mounting, are available

APPLICATION

Due to their compact design and easy installation, split-core current transformers are particularly suited to applications involving places hard to access and limited in space. The separable cores also facilitate the installation on cables or bus bars.
Wherever an interruption of the current path is problematic or a measuring device has to be retrofitted in an uncomplicated manner, split-core current transformers are the correct choice. They transform primary rated currents into galvanically isolated secondary currents of 5 A or 1 A that can be used by the measuring system. The secondary side (usually a measuring device, display or control) is connected by terminals. The design ensures the safe assembly of the primary cable or bus bar in the current transformer which is confirmed by a clearly audible «clicking sound». An additional locking mechanism prevents accidental opening of the separable cores.

Type	SIRAX CT300	SIRAX CT310	SIRAX CT320	SIRAX CT330
Internal dimensions	23 x 33 mm	55 x 85 mm	55 x 125 mm	85 x 172 mm
Width / height / depth	93 / 106 / 40 mm	125 / 158 / 40 mm	155 / 198 / 40 mm	195 / 245 / 40 mm
Primary current I_{pr}	100 A … 400 A	250 A … 2000 A	1600 A … 3000 A	2500 A … 5000 A
Secondary current I_{sr}	5 A oder 1 A			
Class of accuracy	0.5; 1	0.5	0.5	0.5
Test voltage	4 kV; 50 Hz; 1 min			
Nominal frequency	50 … 60 Hz			
Rated insulation level U_m	0.72 kV			
Rated power S_r	1 … 20 VA			
Thermal short circuit current I_{th}	60 x I_N			
Dynamic short circuit current I_{dyn}	2.5 x I_{th}			
Insulation class	E (max. 120 °C)			
Instrument security factor FS	FS10; FS15; FS30			
Housing material	Polycarbonate			
Flammability class	UL94 V-0, self-extinguishing, not dripping, free of halogen			
Ambient temperature	-20 °C … +45 °C			
Standard accepted	IEC 61869-1; IEC 61869-2			

SIRAX CT200-CT230

Bushing-Type current transformers

CT200 CT210 CT220

CUSTOMER BENEFIT

- Safe housing with high flame protection
- Tampering protection due to sealable covers
- Contamination protection due to optimised housing
- Enclosed coil body
- High measuring accuracy up to Class 0.2S
- Large selection of nominal sizes and dimensions
- Easy and fast assembly
- Safe connection technology via screw terminals
- Suitable for circular conductors, copper rails, mounting rails
- Different assembly options, e.g. wall, cable, bus bar or top hat rail mounting, are available
- Free of maintenance

APPLICATION

Bushing-type current transformers are used wherever high currents are to be acquired and processed. They are directly placed on the primary conductor (bus bar or conductor) through the opening. The secondary side (usually a measuring device, energy meter or display) is connected by front and rear connecting terminals.
Bushing-type current transformers constitute the most reliable, precise and cost-effective current transformer versions. However, the primary conductor must be disconnected for installation purposes. For this reason, they are more suitable for new facilities.

Type	SIRAX CT200	SIRAX CT210	SIRAX CT220	SIRAX CT230
Circular conductor	∅ 21 mm	∅ 28 mm	∅ 30.5 mm	∅ 51 mm
Primary conductor	20 x 10 mm	30 x 10 mm 20 x 20 mm 2 x 15 x 10 mm	30 x 10 mm 25 x 25 mm 2 x 20 x 10 mm	60 x 12 mm 50 x 30 mm 50 x 20 mm
Width / height / depth	50 / 70 / 51 mm	50 / 70 / 51 mm	62 / 78 / 40 mm	86 / 110 / 45 mm
Primary current I_{pr}	50 A … 300 A	100 A … 600 A	100 A … 800 A	300 A … 1600 A
Secondary current I_{sr}	5 A or 1 A			
Class of accuracy	0.5	0.5	0.2S; 0.5	0.2S; 0.5
Test voltage	4 kV; 50 Hz; 1 min			
Nominal frequency	50 … 60 Hz			
Rated insulation level U_m	0.72 kV			
Rated power S_r	1 … 20 VA			
Thermal short circuit current I_{th}	60 x I_N			
Dynamic short circuit current I_{dyn}	2.5 x I_{th}			
Insulation class	E (max. 120 °C)			
Instrument security factor FS	FS5; FS10			
Housing material	Polycarbonate			
Flammability class	UL94 V-0, self-extinguishing, not dripping, free of halogen			
Ambient temperature	-20 °C … +45 °C			
Standard accepted	IEC 61869-1; IEC 61869-2			

SIRAX CT100, SIRAX CT110

Wound current transformers

CT100

CUSTOMER BENEFIT

- Primary and secondary current are connected directly via screw terminals
- Safe housing with high flame protection
- Tampering protection due to sealable covers
- Contamination protection due to optimised housing
- Enclosed coil body
- High measuring accuracy up to Class 0.2S
- Easy and fast assembly
- Safe connection technology via screw terminals
- Different assembly options, e.g. wall or top hat rail mounting are available
- Free of maintenance

APPLICATION

Wound current transformers convert low primary rated currents starting with 1A to galvanically separated secondary rated currents of 5A or 1A which can be used by the measuring system. Compared to bushing or cable type current transformers, wound current transformers have 4 screw connections. The primary as well as the secondary current are connected directly via the screw terminals.
Wound current transformers are particularly suitable to low currents where bushing and cable type current transformers cannot be used anymore.

Type	SIRAX CT100		SIRAX CT110	
Width / height / depth	50 / 70 / 51 mm		62 / 78 / 40 mm	
Primary current I_{pr}	50 A … 300 A		100 A … 800 A	
Secondary current I_{sr}	5 A or 1 A			
Class of accuracy	0.2	0.5	0.2	0.5
Test voltage	3 kV; 50 Hz; 1 min			
Nominal frequency	50 … 60 Hz			
Rated insulation level U_m	0.72 kV			
Rated power S_r	1.0 VA	2.5 VA	1.5 VA	5 VA
Thermal short circuit current I_{th}	40 x I_N			
Dynamic short circuit current I_{dyn}	2.5 x I_{th}			
Insulation class	E (max. 120 °C)			
Instrument security factor FS	FS15	FS10	FS15	FS10
Housing material	Polycarbonate			
Flammability class	UL94 V-0, self-extinguishing, not dripping, free of halogen			
Ambient temperature	-20 °C … +45 °C			
Standard accepted	IEC 61869-1; IEC 61869-2			

ENERGY MANAGEMENT SOFTWARE

EMC 5.X

Energy data management with system

CUSTOMER BENEFIT

- Transparency: visualization of consumption and load structures - detection of weak points
- Responsibility: source-related allocation of consumption or costs
- Benchmarking: acquire figures and compare objects
- Cost minimization: identify and exploit potential savings
- Budget security: precise planning and monitoring of energy costs
- Tariff optimization: selection of the least expensive tariff for energy import by power utility, as well as consumption and contract conditions
- Environmental compatibility: reduced consumption decreases CO2 emissions
- Up to date: real-time overview of consumption and billing data
- Flexible: billing based upon individually adjustable parameters
- Service requirements: rising energy consumption indicates the need for maintenance or repair

APPLICATION

Systematic Energy Management for Lasting Benefits

As a high performance software solution, Energy Management Control 5.x is laid out specifically for applications in the fields of industry, energy and housing. It allows for automatic logging, visualization, analysis and billing of all relevant consumption data. With the help of this well founded database, targeted and effective measures for improvement can be implemented – and opportunities for modern energy management can be fully exploited.

TECHNICAL DATA

Computer:	min. Pentium PC, 1 GHz, 250 MB RAM
Browser:	Internet Explorer starting version 6.0 SP 1
Operating system:	XP and Windows 7
Languages:	D, GB, F, I, NL, CZ, PL switchable

Article No.	Description
Z508A	EMC Basic version – Reading and display data, 1 energy type / location, 1 user, 64 channels, 20 virtual channels*
Z508B	EMC Expansion – Providers and Tariffs
Z508C	EMC Expansion – Building Automation / Industrial Version*
Z508D	EMC Expansion – Consortium*
Z508E	EMC Expansion – Virtual Channels
Z508L	EMC Expansion – Export Interface
Z508M	EMC Expansion – DL Manager as Service
Z508N	EMC Expansion – Real-time Display
Z508F	EMC License – 5 User
Z508G	EMC License – 5 Locations / Energy Types
Z508H	EMC License – 100 Measuring Points
Z508i	EMC License – 5 Companies
Z508J	EMC Full Version*
Z508K	EMC Start-up – 1 enrgy type / location, 1 user, 10 channels*
-	EMC maintenance contract for 1 year, 12% of the purchase price (annually in advance)

* only in combination with a maintenance contract

SMARTCOLLECT

Data management software

SMARTCOLLECT is a data management software which can acquire measured data in an easy manner and store the same in an open SQL database. This software offers basic functionalities for data analysis and for easy energy monitoring as well as the easy preparation and disposal of reports.

Providing a mature graphic user interface, the SMARTCOLLECT software is clearly structured and easily operated.

SMARTCOLLECT is modularly designed and perwiths supplementing modules or functions at any time.

CUSTOMER BENEFITS

- Easy data communication via Modbus RTU / TCP, ECL and SmartControl-Direct
- Connection also via OPC
- Devices of Camille Bauer and Gossen Metrawatt are already predefined and selectable in the software
- Open for the devices of all manufacturers
- Data is stored in an open MS SQL database (depending on the scope Express or Server)
- Modular cost / performance model – basic version may be extended at any time

MODULAR DESIGN

COMPONENTS

The SMARTCOLLECT energy management software consists of the following components:

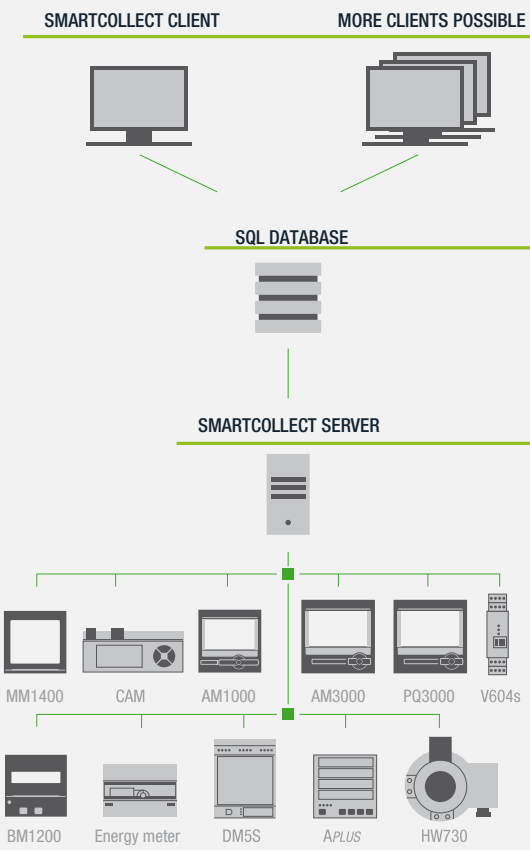

SMARTCOLLECT CLIENT

- Graphic visualisation of queried data
- Export via Excel file
- User interface to define the data sources to be read out as well as error and warning messages via email.

SMARTCOLLECT DATABASE

- MS SQL database (depending on the scope Express or Server)
- Contains the collected data
- Open and unencrypted

SMARTCOLLECT SERVER

- Collects and configures data from active sources and channels and writes the same directly into the central database.

SMARTCOLLECT software components may be installed on an individual system or on several servers or computers.

SMARTCOLLECT - MODULES

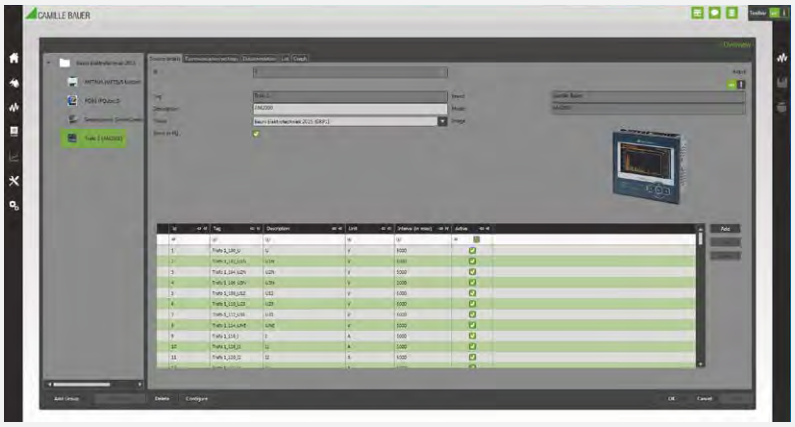

Example PM10 - Definition of measured values

PM10 - BASIC MODULE

Measured data can be easily acquired and stored in an open SQL database with the PM10 module. The module offers basic functionalities for data analysis and for easy energy monitoring as well as preparing and sending of reports.
A sophisticated graphic user interface clearly presents the SMARTCOLLECT software and facilitates its easy operation.

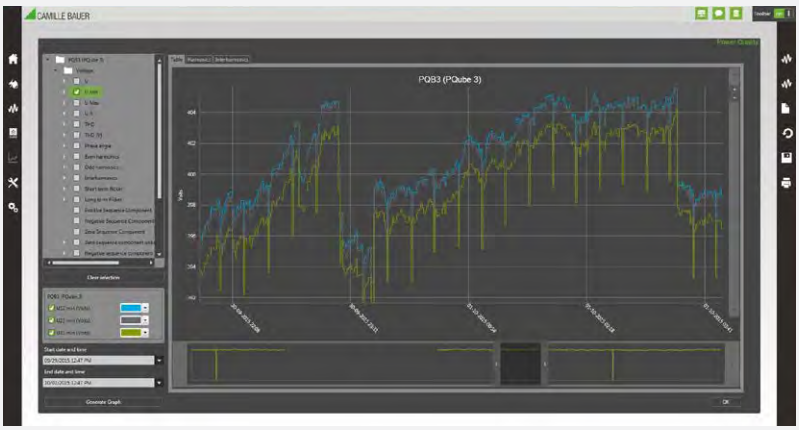

Example PM20 - Comparison of voltage curves

PM20 - POWER QUALITY

The PM20 module extends the basic PM10 module by many visualising and analysing options for the system quality instruments. The PQDIFF files of the system quality instruments may be imported and converted in the database. Reports can be prepared and events analysed.

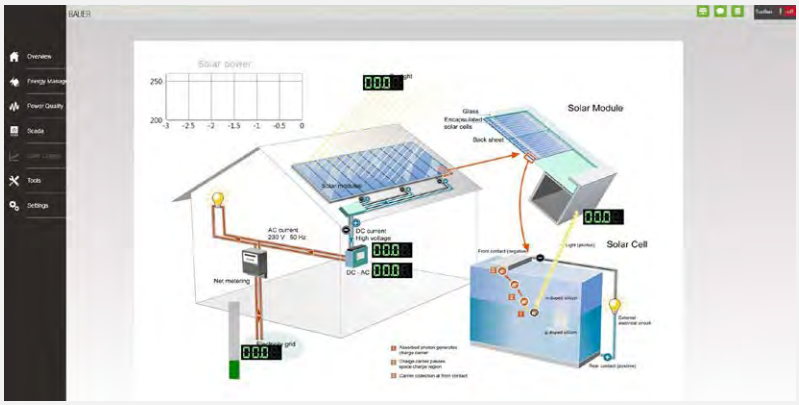

Example PM30 - Visualising of a solar plant

PM30 - VISUALISATION

The PM30 module again builds on the PM20 module and supplements it by the option of visualising plants, processes and procedures. Individual images, charts or drawings for live measured data, switching statuses and limit values may be linked and thus a SCADA System created.

SERVICES

Camille Bauer Metrawatt AG has many years of experience in the development of instruments which must work precisely under any external conditions.

Our products excel in a maximum of safety for the operating staff and standard-compliant functioning under the most varied site and environmental conditions.
Highly precise EMC and environmental tests are conducted at our own test laboratory. In addition, we regularly have the safety and quality of our instruments documented by external accredited test laboratories as well as independent international certification bodies.

Depending on the individual requirements and tasks, we support you in the preparation of corresponding system solutions taking the site conditions into consideration.

CONTENT

CHAPTER - PAGE	SERVICES
04 - 133	Camille Bauer Metrawatt - reliable and environmental-friendly
04 - 134	Extra documentation
04 - 134	Services and on-site service
04 - 135	Test confirmation, measuring test record, manufacturer's certificate

CAMILLE BAUER METRAWATT - RELIABLE AND ENVIRONMENT-FRIENDLY

SWISS TOP QUALITY – INDEPENDENTLY APPROVED

Camille Bauer Metrawatt AG has long years of experience in the development of instruments which must operate precisely in all external conditions:
Our products feature maximum safety for the operating staff and standardaligned functioning under different site and ambient conditions.
Highly precise EMC and environmental tests can be conducted at our own test laboratories. In addition, we have the safety and quality of our instruments again and again documented by external accredited test laboratories as well as independent international certification bodies.

CERTIFICATIONS *

- UL
- CSA
- GL
- Ex
- CB-Scheme (IECEE compliance test)

* Safety, EMC, environment

CONFORMITY APPROVALS **

- Profibus
- IEC61850
- HART

** Communication

SPECIAL APPROVALS

- Seismic resistance
- Nuclear approval

CAMILLE BAUER METRAWATT: SUSTAINABILITY WITH A SYSTEM

- Resource-optimised raw material management
- Environmentally-friendly production processes with effective emission protection and manufacturing steps neutral for climate
- Permanent further development of products and services under efficiency aspects
- Meticulous quality and environment compatibility tests
- Member of Cleantech Industry Association Switzerland
- Certified according to ISO 14001

EXTRA DOCUMENTATION

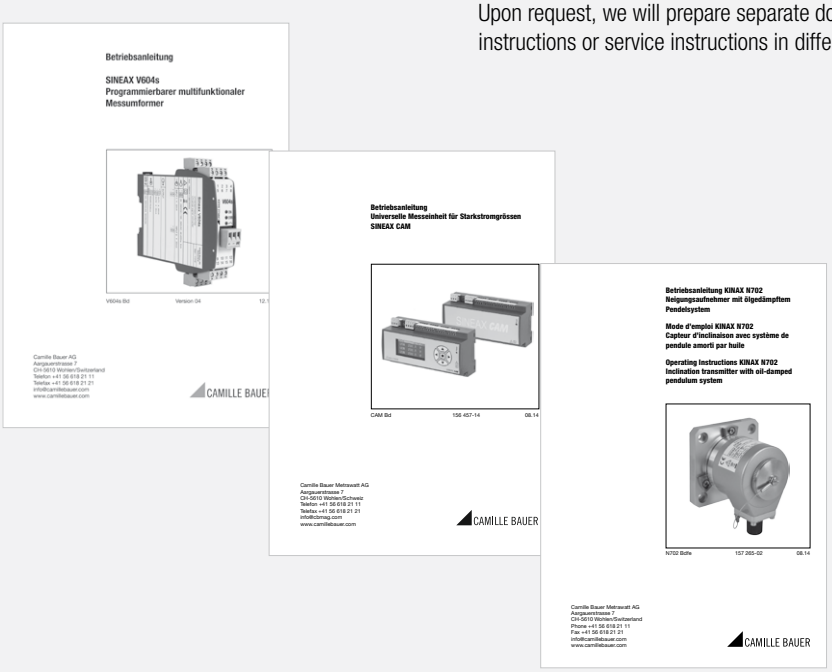

Upon request, we will prepare separate documentation packages in printed form for you, e.g. operating instructions or service instructions in different languages.

SERVICES AND ON-SITE SERVICE

SERVICES

We will be pleased to support you in commissioning your plant on site taking the local and technical conditions into consideration.

Different rates result according to requirements:
- Head of technology and upper management functions based in Switzerland
- Product Manager based in Switzerland
- On-site technician based in Central Europe
- On-site technician based in Russia and CIS
- On-site technician based in Asia, India and/or China

Our quality system corresponds to international standards for quality management and quality systems (ISO 9000 series) and has been confirmed with the **certificate of level ISO 9001 and ISO 14001**. The certificates may be obtained from us in German, English, French or Italian in individual copies.

TEST CONFIRMATION, MEASURING TEST RECORD, MANUFACTURER'S CERTIFICATE

CE EU KONFORMITÄTSERKLÄRUNG
EU DECLARATION OF CONFORMITY

CAMILLE BAUER

Dokument-Nr / Document No.: PM 1000846
Hersteller/ Manufacturer: Camille Bauer Metrawatt AG, Switzerland
Anschrift / Address: Aargauerstrasse 7, CH-5610 Wohlen
Produktbezeichnung/ Product name: Messumformer für Wechselstrom / Transducer for AC current
Typ / Type: SINEAX I538

Das bezeichnete Produkt stimmt mit den Vorschriften folgender Europäischer Richtlinien überein. Aufgewiesen durch die Einhaltung folgender Normen:
The above-mentioned product has been manufactured according to the regulations of the following European directives proven through compliance with the following standards:

Richtlinie / Directive	2014/30/EU EMV-Richtlinie / EMC directive
Norm / Standard	EN 61000-6-2:2005+Cor. 2006-09 Fachgrundnormen – Störfestigkeit für Industriebereiche. Generic standards – Immunity for industrial environments. EN 61000-6-4:2007 + A1:2011 Fachgrundnormen – Störaussendung für Industriebereiche. Generic standards – Emission standard for industrial environments
Richtlinie / Directive	2014/35/EU Niederspannungsrichtlinie – CE-Kennzeichnung. Low Voltage Directive – Attachment of CE marking
Norm / Standard	EN 61010-1:2010 Sicherheitsbestimmungen für elektrische Mess-, Steuer- Regel- und Laborgeräte – Teil 1: Allgemeine Anforderungen. Safety requirements for electrical equipment for measurement, control and laboratory use – Part 1: General requirements. EN 61010-2-030:2010 Besondere Bestimmungen für Prüf- und Messstromkreise. Particular requirements for testing and measuring circuits.
Richtlinie / Directive	2011/65/EU RoHS Richtlinie zur Beschränkung der Verwendung bestimmter gefährlicher Stoffe in Elektro- und Elektronikgeräten. Directive on the restriction of the use of certain hazardous substances in electrical and electronic equipment

Ort, Datum / Place, date: Wohlen, 10. September 2013
Unterschrift / signature:
Mr Ulrich, Leiter Technik / Head of engineering
J. Brem, Qualitätsmanager / Quality manager

CSA INTERNATIONAL

Certificate of Compliance

Certificate: 1146229 Master Contract: 263767
Project: 2004513 Date Issued: 2006-08-31
Issued to: Camille Bauer AG
Aargauerstrasse 7
Wohlen, 5610
Switzerland
Attention: Mr. Markus Erhardtsch

The products listed below are eligible to bear the CSA Mark shown with adjacent indicators 'C' and 'US'

C US

Issued by: Hiranth Desai, C.E.T.

Authorized by: Renato Populin, C.E.T., Product Group Manager

PRODUCTS
CLASS 8721 M - ELECTRICAL EQUIPMENT FOR LABORATORY USE - Certified to
- US Standards
CLASS 8721 M2 - LABORATORY EQUIPMENT - Electrical

Motor-operated, Camille Bauer, SINEAX, series Models A3xx, and Otto Scientific, Inc., Models DCTR, DCUR, DET, DTD, DPE, and DPA, may be followed by 2 digits, may be followed by 1 to 3 alphanumeric symbols, double insulated, pollution degree 2, installation category III, Class II, rated 90-240V AC/DC, Security, or 24-60V DC, or 24V AC, 50/60Hz, 25VA max, measuring circuits rated 0-60V AC, 5A

Product designation cross reference

BASICS

Our extensive product range permits covering the most varied measuring tasks in a perfect fashion. The instruments are produced according to individual customer specifications or their functionality is adapted to requirements to guarantee optimum results at their place of operation.

For the correct use and handling of our products, electronic or electromechanical skills are required depending on the application.

Some frequently occurring terms and basics are subsequently briefly presented.

CONTENT

CHAPTER - PAGE	BASICS
05 - 137	Environmental testing
05 - 139	Electromagnetic compatibility
05 - 140	Galvanic isolation
05 - 142	Explosion protection through intrinsic safety
05 - 146	Protection classes
05 - 146	Technical definitions of Position sensors

ENVIRONMENTAL TESTING

What is it all about?

Products are exposed to many environmental impacts during their useful life. These are not liwithed to impacts during operation in the intended application in the field but also comprise detrimental influences during storage or transport to customers. The impacts include temperature, climate, water and dust conditions but also mechanical stress like vibration or shock.

The tests have the objective of checking the resistance against possible environmental impacts and to ensure reliability in later operation. Assumptions are made, e.g. concerning the reference range for environmental temperature or the annual average relative humidity. Users must compare these details with their own requirements (see data sheet). It is only after this check that they can be certain that the device suits their applications and will show the desired behaviour.

Standards

The requirement of testing the behaviour of devices in changing environmental conditions is derived from product group standards for Camille Bauer products, e.g. EN / IEC 60 688 „Electrical measuring transducers for converting a.c. electrical quantities to analog or digital signals“. The normal place and type of use and the prevailing environmental conditions to which these instruments are exposed are known. Tests and test criteria which the device has to meet are derived from this information. For firmly installed instruments these tests concern the operational behaviours in changing temperatures (cold, dry and humid heat) as well as the influence of vibration and shocks.

Operation

The ambient temperature in which a device is operated can change quickly, e.g. if a part of the plant in which the device has been installed heats up due to operational demands or because of the difference of day and night temperatures in rooms which are not heated. Usually, devices heat themselves up. This can occur due to dissipated heat of passive components or self-heating of processors. Depending on the season and the environment, the heat may be dry or humid, i.e. precipitating or not precipitating. Thermic testing might take hours or days. The device is operated under normal conditions, i.e. with input signals and loaded outputs. The ambient temperature is changed step by step in regular intervals, kept constant and then changed again, either positively or negatively. In this way, the entire operating temperature range of the device is applied upwards and downwards. Any change in the behaviour of the device and the extent of the same is verified after each step. On the one hand, the test shows whether the instrument meets the accuracy requirements within the reference range and, on the other hand, the temperature influence outside of the reference range is checked.

If the devices are installed in the vicinity of rotating machines, assembled in ships or transported to customers by lorries and aeroplanes, they are exposed to permanent vibration. This might lead to larger components being cut off or mechanical locking devices of the housings being opened. Vibration testing in which the tested object is exposed to repeated harmonic vibration helps to find weak points and to eliminate them. Shock testing, on the other hand, subjects the device to a specified form of shock through acceleration and breaking at irregular intervals. In this way, the behaviour of the device can be tested if it is dropped from a certain level.

Special measurements

Not all instruments are used in applications covered by standard tests. Earthquake vibration tests, for example, require low-frequency vibration of a high amplitude. Our test facilities cannot process the required test schedule exactly. Therefore, the measurements have to be done externally. Normally, customers assume the costs for this service. Upon request, we will be pleased to make test instruments available if you intend to perform the tests yourself.

Standard tests can also be performed with changed general conditions. Whether and to what extent customers participate in the costs incurred will be decided in each case.

Tests at Camille Bauer

Camille Bauer has test facilities to perform all required product tests in-house.

Overview of tests

EN / IEC 60 068-2-1 – cold
EN / IEC 60 068-2-2 – dry heat
EN / IEC 60 068-2-78 – humid heat
EN / IEC 60 068-2-6 – vibration
EN / IEC 60 068-2-27 – shock

ELECTROMAGNETIC COMPATIBILITY

What is it all about?

Electromagnetic compatibility (EMC) signifies that electrical and electronical products work safely at their place of use. To safeguard this, the interfering emission of electromagnetic signals of devices, systems or plants must be liwithed. On the other hand, it must also be safeguarded that devices, systems or plants are not impaired by the interfering signals present in their environment. These relatively simple facts are stipulated in the EMC Directive 89/336/EC and can only be achieved if all those involved play the game. All manufacturers are obliged to test their products accordingly or have them tested.
The CE-mark is the basic precondition that a product may be put into circulation in Europe. In this way, manufacturers confirm that their products conform to applicable directives for their type of product. The EMC directive is an integral part of this requirement profile. Outside of Europe, other identification obligations are partly applicable. These are now harmonised to such an extent that also in relation to EMC comparable requirements can be assumed.

The problem

The increase of electrical and electronical products in the industrial environment but also in products of daily use is still immense. More and more functionality with even higher performance is implemented in these products. Processor systems with increasingly higher clock frequencies are being used. They generate higher and higher levels of interference unintentionally and also become more and more sensitive to interfering sources in their environment.

To make matter worse, the applications using radio frequencies are also increasing. For example, mobile telephones must be in a position of sending and receiving signals. Though their transmission output is liwithed, incompatibilities might result if they are used inconsiderately in the vicinity of sensitive devices. Systems may be interfered with to such an extent that they provide wrong signals or break down completely. This is the reason, why their use is often liwithed, e.g. in aircrafts or also in hospitals where sensitive medical devices might be affected. The awareness of EMC problems in aircrafts has been established over years but must still be pointed out to passengers prior to every take-off. When entering a hospital hardly anybody turns of his or her mobile telephone despite warning messages on the walls. Operational managers of power plants are often not aware of the fact that the use of mobile telephones in the vicinity of measuring, controlling and regulating units can be critical. Radio and television stations, mobile radio antennae or remote controls also work with frequencies which might interfere with sensitive devices and impair their operation.

Sources of interference

In the industrial environment, frequency converters, motors and other consumers are increasingly operated parallel to sensitive measuring and control systems. Higher levels of interference must generally be expected in all places where high power is applied, switched or pulsed or electronic systems with high pulse frequencies are used.

The use of wireless telecommunication facilities or networks also increases the probability of incompatible levels of interference in the environment of sensitive equipment.

Standards

Applicable specific basic standards define the requirements of products and systems for use in their original environment. A liwithed number of tests with evaluation criteria and the expected operating behaviour are determined using defined measuring and test procedures. Specific basic standards contain details of the measuring method and general conditions. Specific EMC standards are available for certain products or product groups and have priority over the general requirements mentioned above.

EMC safety can only be achieved by a complete examination in accordance with standards. Since all standards are interrelated only their sum total provides a satisfactory result. Partial examination is not perwithted, however still done by some manufacturers due to lacking measuring equipment or for reasons of costs.

Meeting standards does not necessarily provide smooth operation. A device may be subjected to higher loads in operation than envisaged by the standard. This might be caused by insufficient protection of the equipment or by EMC-incompatible wiring. In such a case, the behaviour of the device is largely undefined since it has not been tested.

Tests at Camille Bauer

Camille Bauer has its own EMC laboratory where the complete scope of all required tests (see below) can be performed. Even if our laboratory is not accredited, comparative measurements at the premises of respective service providers as well as subsequent checks by customers confirmed our test results in each case.

We also test our devices under higher loads than demanded by the standard even if this is not explicitly stated in our data sheets.

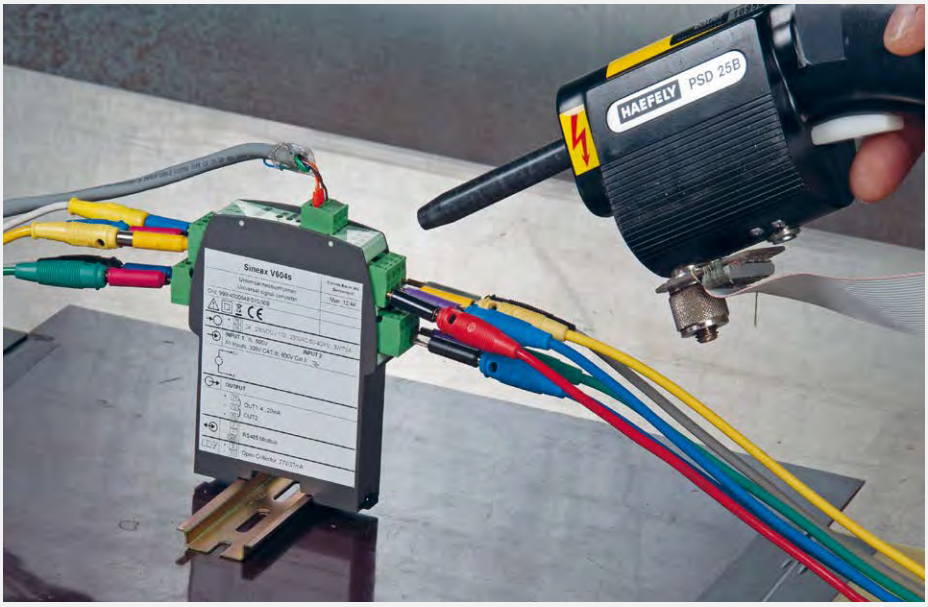

Test of immunity to static discharges on a SINEAX V604s

Specific basic standards

IEC / EN 61 000-6-2
Immunity standard for industrial environments

IEC / EN 61 000-6-4
Emission standard for industrial environments

Basic standards

IEC / EN 61 000-4-2
Immunity to static discharge which occurs as potential differences - mainly caused by friction electricity - are reduced. The most known effect is surely when persons get charged as they walk across a carpet and discharged with the generation of a spark when they touch a metal part. If this is, e.g., the plug of an electronic device the brief current pulsee might be sufficient to destroy the device.

IEC / EN 61 000-4-3
Immunity to high-frequency electromagnetic fields. Typical sources of interference are radiotelephones used by the operating, maintenance or service staff, mobile telephones and transwithting facilities needing these fields. Coupling happens via the air. Unintentional fields also occur in welding facilities, thyristor-controlled inverters or fluorescent lamps. Coupling might as well be generated via the line in such cases.

IEC / EN 61 000-4-4
Immunity to fast transient interference variables (bursts) which are generated in switching operations (interruption of inductive loads or bouncing of relay contacts)..

IEC / EN 61 000-4-5
Immunity to pulsee voltages (surges) which are generated in switching operations or lightning and arrive at the device via the connecting lines.

IEC / EN 61 000-4-6
Immunity to conducted disturbances, induced by high-frequency fields which are typically generated by radio transmission facilities. Coupling takes place via the connecting line of the device. For further sources of interference see 61000-4-3.

IEC / EN 61 000-4-8
Immunity to magnetic fields with power frequencies. Strong magnetic fields result, e.g., in the immediate vicinity of power lines or bus bars.

IEC / EN 61 000-4-11
Immunity to voltage dips, brief interruptions and voltage fluctuations. Dips and brief interruptions of the supply voltage result from errors in the supply system or when large loads are switched. Voltage fluctuations are caused by fast-changing loads, e.g. in arc furnaces, and also generate flickering.

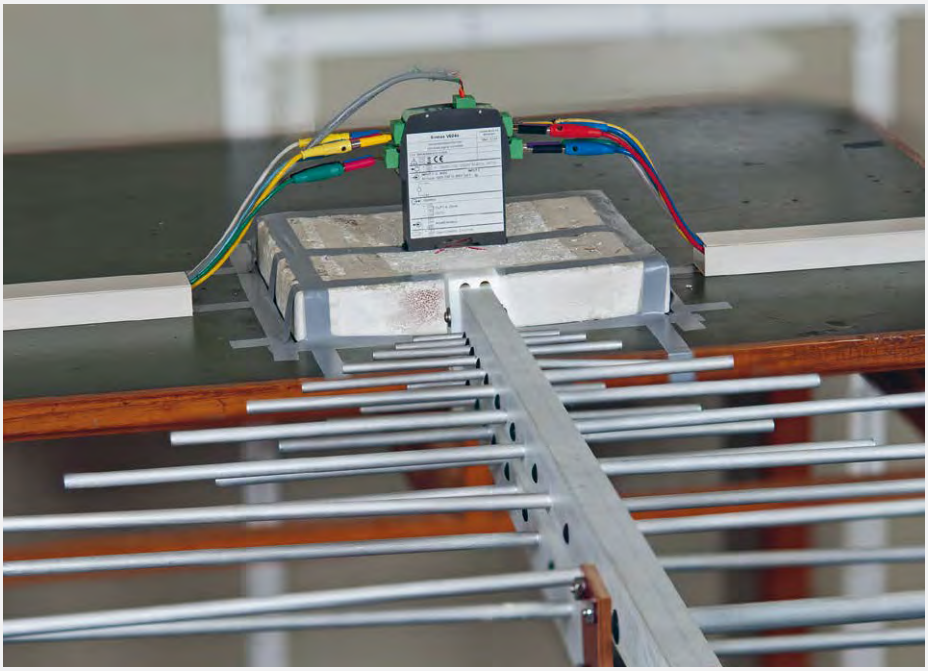

Test of immunity to high-frequency fields on a SINEAX V604s

GALVANIC ISOLATION

Despite the continually increasing level of automation and the proliferation of fieldbus systems in process automation, signal converters are still indispensible. They essentially perform 3 main tasks:

- Signal conversion
- Galvanic isolation of signals
- The amplification of signals

In addition, some signal converters can supply 2-wire transmitters.

Two distinct systems are available: Passive signal converters designed in the so-called 2-wire technology which obtain their energy directly from the measuring circuit and active signal converters, e.g. isolation amplifiers, which are equipped with a special power supply connection. Galvanic isolation of the individual “circuits” is of great significance. Camille Bauer signal converters typically feature galvanic 3-way isolation which completely decouples the input, output and power supply circuit.

Galvanic isolation

Galvanic isolation (also referred to as decoupling) generally describes the electric isolation of two power circuits. Charge carriers cannot flow from one circuit to another since there is no conductive connection between the circuits. However, electric power or signals may be transwithted between the circuits via corresponding coupling elements.
A typical example for galvanic isolation is a simple transformer with a primary and secondary winding. Both windings are completely separated from each other. The energy is transwithted by electromagnetic fields. Apart from this process for galvanic isolation, Camille Bauer also uses optical paths. The signal is transwithted by light pulses from a transmitter to a receiver.

Signal converters with power supply

(Active signal converters / 4-wire technology)
These signal converters are equipped with a power supply which is galvanically isolated from the measuring circuit. Depending on the design, these signal converters are frequently not only used as potential isolators but also as signal converters or amplifiers. See Figure 1.

Signal converter without power supply

(passive signal converters / 2-wire technology
Potential isolation or measuring signal conversion does not always demand active signal converters – signal converters without power supply can be

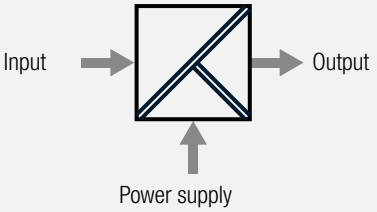

Fig. 1

employed frequently without any liwithation. In this case, the energy is supplied from the voltage drop at the input terminals of the passive signal converter. However, the appropriateness for the respective application is to be examined taking the power rating of the input signal and the output burden into consideration. Signal converters without power supply do not enable signal amplification and do not work free of reaction, i.e. the output burden bears directly on the input signal.
For an example see Figure 2: A transmitter with a 0…20 mA signal at the input of a passive signal converter can carry a maximum of 18 V (I_E = 0…20 mA, $U_{E\,max}$ = 18 V).
The voltage drop or internal voltage consumption U_{Int} of the signal converter is stated to be 2.8 V. This results in $U_E = U_{Int} + (I_A \times R_B)$ the maximum output: $R_{B\,max} = (U_{E\,max} - U_{Int}) / 20\ mA = 760\ \Omega$.

Main tasks of signal converters

Signal conversion

An input signal is converted into an output signal. Numerous applications require this feature. For example, resistance or voltage values of temperature sensors are converted into standardised current signals, e.g. 4…20 mA or 0…20 mA. Adaptations from 4…20 mA to 0…20 mA or to voltage signals are also quite common. In addition, input curves often have to be adapted, linearised or inverted. (Figure 3).

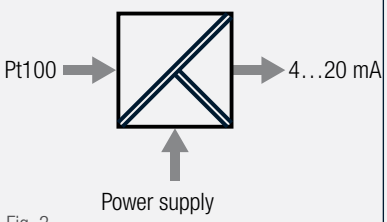

Fig. 3

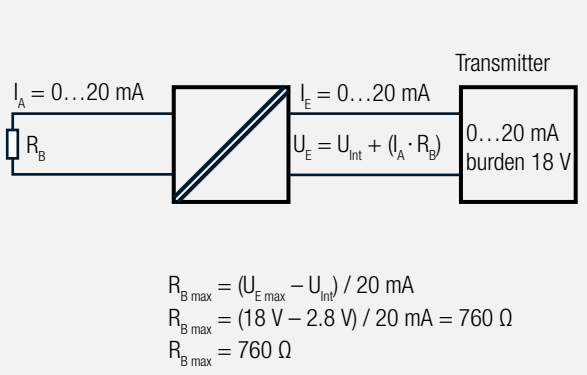

Fig. 2

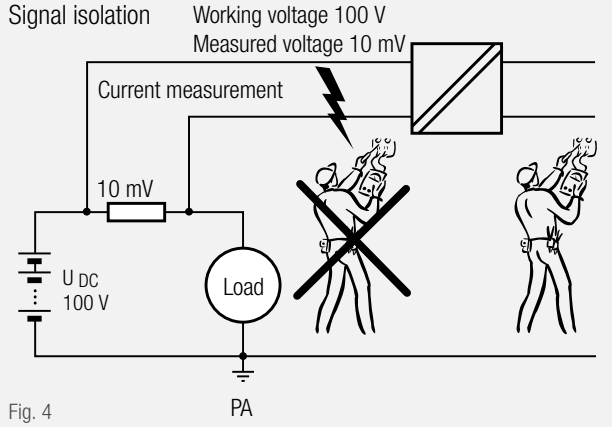

Fig. 4

Galvanic isolation of signals

Input and output signals are galvanically isolated from each other. This avoids parasitic voltages by potential differences, ensures plant safety and protects persons. Galvanic isolation thus safeguards personal security when voltages with dangerously high potentials are measured. Despite the fact that a measuring signal may only amount to a few mV, the potential against earth and thus against persons is dangerously high in case of a failure. This is referred to as the working voltage. Figure 4 shows the example of 10 mV measurement on a working voltage of 100 V.

Signal amplification

This function is reserved for active signal converters since a separate power supply is needed. It mainly concerns applications requiring bridging of long signal paths and the avoidance of interferences.

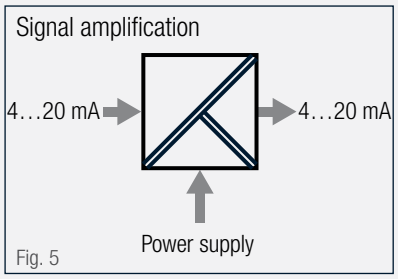

Fig. 5

EXPLOSION PROTECTION THROUGH INTRINSIC SAFETY

1. GENERAL ASPECTS

For the acquisition of signals in hazardous areas, angular position transmitters as well as signal converters of Camille Bauer are designed in the intrinsic safety type of protection “i“. The abbreviation of “i“ is derived from term of intrinsic safety.
An intrinsically safe circuit cannot cause an ignition of a certain atmosphere under the conditions determined in Standard IEC 60079-11, neither by a spark not by thermal effects. This is applicable to undisturbed operation as well as described failure conditions. Equipment must meet the requirements of surface temperature, clearance and creepage distances, labelling as well as the allocation of the electrical equipment to areas of use and zones.

2. FUNCTION

The intrinsic safety type of protection uses the fact that a certain energy is required to ignite a hazardous environment. A circuit is intrinsically safe, if the current and voltage values as well as the energy stored in coils and condensers are liwithed.

3. ZONE CLASSIFICATION

Hazardous environments are classified in standardised zones, in which gas and dust incentive hazardous areas are differentiated.

Zones for hazardous areas due to gas		
Example	Zones	Type of danger
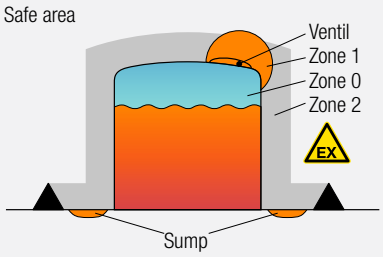	Zone 0	Gas is permanently and for a long time present
	Zone 1	Gas occurs occasionally
	Zone 2	Gas does normally not occur or only for a short period of time
Zones for hazardous areas due to dust		
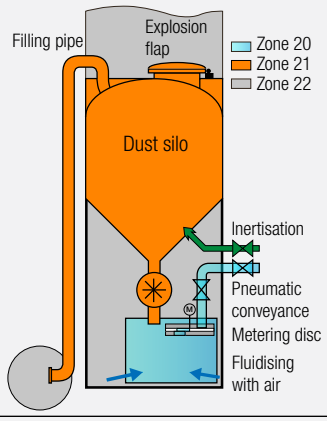	Zone 20	Dust is permanently and for a long time present
	Zone 21	Dust occurs occasionally
	Zone 22	Dust does normally not occur or only for a short period of time

4. INTRINSICALLY SAFE EQUIPMENT

Intrinsically safe equipment is installed in a respective hazardous zone. All of the circuits of such equipment must be designed intrinsically safe. The intrinsically safe equipment of Camille Bauer comprises:

- Angular position transmitters
- Position transmitters
- Programmable temperature transmitters

5. PERTAINING EQUIPMENT

Pertaining equipment is exclusively installed outside of hazardous zones. It has the task of safe coupling of electrical signals into hazardous zones or discoupling out of them. The circuits of pertaining equipment must be designed, examined and certified in accordance with construction regulations in relation to external voltage influences by non-intrinsically safe circuits and concerning the intensity of voltage and circuit values. The pertaining equipment of Camille Bauer comprises:

- Passive isolators
- Power supply units
- Alarm units
- Programmable isolation amplifiers
- Programmable universal transmitters
- Programmable temperature transmitters

6. LEVEL OF PROTECTION

The safety of an intrinsically safe circuit is based on the components used and their susceptibility to failure. Components susceptible to failure are, for example, semiconductors and condensers while relays, transformers and film resistors are considered not to be susceptible to failure.
The reliability of the overall device is evaluated on basis of the components used and the design of the intrinsically safe circuits. The devices are classified in 3 levels of protection:

Protection levels according to EN 60079-11		
Protection-level	Failure consideration	Perwithted zones
ia	Does not cause an ignition, if any combination of two errors occurs in normal operation	0, 1, 2
ib	Does not cause an ignition, if one error occurs in normal operation	1, 2
ic	Does not cause an ignition in normal operation	2

7. INTERCONNECTION OF INTRINSICALLY SAFE AND PERTAINING EQUIPMENT

An intrinsically safe circuit always consists of at least one intrinsically safe and one pertaining item of equipment. When interconnecting them, the safety-oriented values of the intrinsically safe and the pertaining item of equipment must be harmonised. The user is responsible for the safe interconnection of intrinsically safe and pertaining equipment.

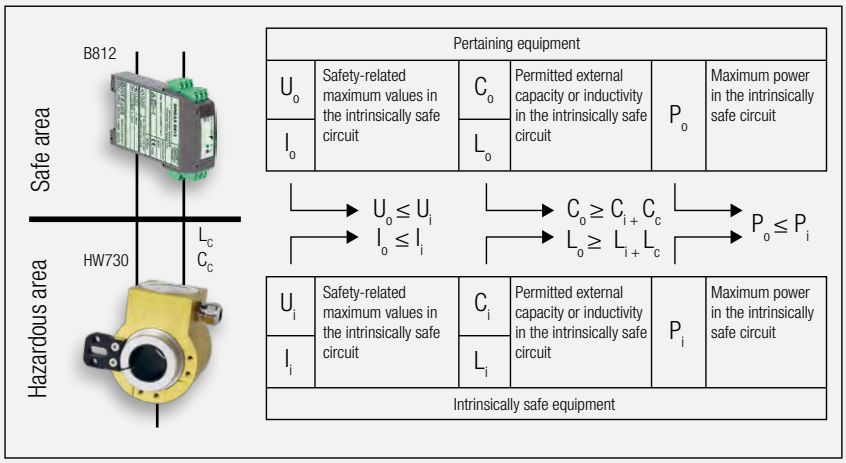

Test criteria of an intrinsically safe circuit using the examples of B812 and HW730

INTRINSICALLY SAFE AND PERTAINING EQUIPMENT

Labelling for electrical equipment according to ATEX

Labelling according to the ATEX directive	Labelling according to EN 60079-0 IEC 60079-0	EC examination certificate

II (2) G

- **Conformity assessment acc. to 94/9/EG** (ATEX)
- **Equipment group**
  I: Underground
  II: Other areas
- **Atmosphere:**
  G: Gas
  D: Dust
- **Equipment category**
  1: very high degree / Zone 0
  2: high degree of safety / Zone 1
  3: normal degree of safety / Zone 2

[Ex ia] IIC T4 Gb

- **[ ] for pertaining equipment**
- **Explosion protected**
- **Type of protection:**
  ia: 2 failure
  ib: 1 failure
- **Equipment protection level:**
  Ga/Da: Zone 0 / 20
  Gb/Db: Zone 1 / 21
  Gc/Dc: Zone 2 / 22
- **Temperature class:**
  T1, T2, T3, T4, T5, T6
- **Gas group:**
  IIA: Propane
  IIB: Ethylen
  IIC: Hydrogen
  Dust group:
  IIIA: flammable lint
  IIIB: non-conductive dust
  IIIC: conductive dust

ZELM 12 ATEX 0482 X

- **Notified Body**
- **Year of EC examination certificate**
- **Special installation conditions**
- **Number of certificate**
- **Examined according to 94/9/EG (ATEX)**

Labelling for electrical equipment according to IECEx

Labelling according to EN 60079-0 IEC 60079-0	IECEx certificate

[Ex ia] IIC T4 Gb

- **[ ] for pertaining equipment**
- **Explosion protected**
- **Type of protection:**
  ia: 2 failure
  ib: 1 failure
- **Equipment protection level:**
  Ga/Da: Zone 0 / 20
  Gb/Db: Zone 1 / 21
  Gc/Dc: Zone 2 / 22
- **Temperature class:**
  (T1, T2, T3, T4, T5, T6)
- **Gas group:**
  IIA: Propane
  IIB: Ethylen
  IIC: Hydrogen
  Dust group:
  IIIA: flammable lint
  IIIB: non-conductive dust
  IIIC: conductive dust

IECEx ZLM 12.0002 X

- **Notified Body**
- **Year of IECEx certificate**
- **Special installation conditions**
- **Number of certificate**
- **Examined according to IECEx**

INTRINSICALLY SAFE AND PERTAINING EQUIPMENT

Hazardous area
Intrinsically safe equipment
Zone classification 0 – 2 and 20 – 22, equipment group 1 – 3

Gas: Zone 0
Dust: Zone 20
Equipment group 1

Gas: Zone 1
Dust: Zone 21
Equipment group 2

Gas: Zone 2
Staub: Zone 22
Equipment group 3

VK616

Programmable head transmitter
II 2 (1) G Ex ia IIC T6

VK626

Head transmitter with HART-Protocol
II 2 (1) G Ex ia IIC T6

V608

Programmable temperatur transmitter
II 2 (1) G Ex ia IIC T6

HW730

Hollow-shaft transmitter for angular position
II 2 G Ex ia IIC T4 Gb
II 2 D Ex ia IIIC T80°C Db
II 2 D Ex tb IIIC T80°C Db

WT710/WT711

Shaft transmitter for angular position
II 2 (1) G Ex ia IIC T6

WT707 / WT717

Transmitters for angular position
II 2 G Ex ia IIC T6

3W2 / 2W2

Transmitters for angular position
II 2 G Ex ia IIC T6

SR709

Position transmitter
II 2 G Ex ia IIC T6

Safe area
Pertaining equipment

TI807

One or multichannel passive isolator
II (1) G [Ex ia] IIC
II (2) G [Ex ib] IIC

2I1

Passive signal isolator
II (1) G [Ex ia] IIC
II (2) G [Ex ib] IIC

PK610

Programming cable
II (1) G [Ex ia] IIC

PRKAB600

Programming cable
II (1) G [Ex ia] IIC

B811

Power supply unit with additional functions
II (1) G [Ex ia] IIC

B812

Standard power supply unit
II (1) G [Ex ia] IIC
II (1) D [Ex iaD] IIIC

SI815

Loop-powered supply unit with HART protocol
II (1) G [Ex ia] IIC

C402

Alarm units
II (1) G [Ex ia] IIC

TV809

Programmable isolation amplifier
II (1) G [Ex ia] IIC
II (1) D [Ex iaD] IIIC

TV808

Configurable isolation amplifier
II (1) G [Ex ia] IIC

V604

Programmable universal transmitter
II (1) G [Ex ia] IIC

VC603

Programmable combined transmitter / alarm units
II (1) G [Ex ia] IIC

V624

Programmable temperature transmitter
II (1) G [Ex ia] IIC
II (1) D [Ex iaD] IIIC

PROTECTION CLASSES

In many applications, electric and electronic devices must work safely under difficult environmental conditions for many years. The penetration of moisture and foreign matter, e.g. dust, is to be avoided to safeguard reliable operation.

Systems are classified in so-called IP codes which relate to their suitability for different environmental conditions. According to DIN standard, the abbreviation IP stands for International Protection while in English Ingress Protection is used. DIN EN 60 529 contains these classes under the heading of Classes of Protection by Housings (IP code). The description is always composed of the letters IP to which a two-digit number is added showing the scope of protection a housing provides in relation to contact or foreign matter (first digit) and moisture (second digit).

If one of the two digits is not required, it is replaced by the letter X (e.g. “IPX1“).

PROTECTION CLASS FOR CONTACT AND FOREIGN MATTER (1ST DIGIT)

Digit	Protection against contact	Protection against foreign matter
0	No protection	No protection
1	protection against large-area body parts ∅50 mm	Large foreign bodies (from ∅50 mm)
2	Finger protection (∅12 mm)	Medium-sized foreign bodies (from ∅12.5 mm, lenght up to 80 mm)
3	Tools and wires (from ∅2.5 mm)	Small foreign bodies (from ∅2.5 mm)
4	Tools and wires (from ∅1 mm)	Grain-shaped foreign bodies (from ∅1 mm)
5	Wire protection (like IP 4) dust-protected	Dust deposits
6	Wire protection (like IP 4) dust-tight	No dust penetration

PROTECTION CLASS WATER PROTECTION (2ND DIGIT)

Digit	Protection against water
0	No protection
1	Protection against vertically falling water drops
2	Protection against diagonally falling (up to 15°) water drops
3	Protection against falling spray water up to 60° against the plumb line
4	Protection against splash water from all sides
5	Protection against jets of water from any angle
6	Protection against strong jets of water (flooting)
7	Protection against temporary immersion
8	Protection against permanent immersion
9k	Protection against water in high-pressure/steam cleaning

TECHNICAL DEFINITIONS OF POSITION SENSORS

BAUD RATE

The baud rate states the transmission frequency of a serial interface in bits per second.

RESOLUTION

The resolution represents the capability of a facility to separate physical variables of the same dimension from each other. The resolution thus indicates the smallest distinguishable difference. In physical instruments, the resolution is often confused with accuracy. The resolution states in which degree of detail the measured value can be read out while it does not have to agree with the respective accuracy. The resolution is thus generally higher than the accuracy.
In single-turn angular position transmitters, the resolution states the number of measuring steps per revolution. In multiturn angular position transmitters, it states the number of measuring steps per revolution and the number of revolutions.

$$\text{Resolution} = \frac{\text{Circumference}}{\text{Accuracy}} = \frac{U}{G}$$

ACCURACY

The absolute accuracy states the degree of agreement between the indicated and true value.

Bits	Angle/bit	Resolution
9	0.703125	512
10	0.3515625	1024
11	0.1757813	2048
12	0.0878906	4096
13	0.0439453	8192
14	0.0219727	16384

ERROR LIWITH

The error liwith refers to the maximum deviation of all measured values from the set point of a reference standard during a 360° revolution.

REPEATABILITY

According to DIN 32 878, the repeatability indicates the maximum dispersion of measured values of at least five successive deviation diagrams taken in the same direction of rotation.

CODE TYPES

Binary code

The binary code is structured in accordance with the decimal system. Messages can be represented by sequences of two different symbols (e.g. 1/0 or correct/incorrect).

Gray code

The Gray code is a single-step code in which adjacent code words differ only in one dual digit. This ensures that only one bit changes from item to item.
If one uses a certain part of the complete Gray code, a symmetrically capped Gray code results. In this way, an even-numbered division is obtained.
If the shaft of the encoder turns clockwise, the code values ascend. With an inversion of the highest-order bit, while the shaft is turning clockwise, also descending code values may be generated.

Decimal BCD Code

To avoid the conversion of a decimal figure into a binary figure, often the natural binary code is not used but only the individual digits of the decimal figure are binarily encoded.

SYNCHRON SERIAL INTERFACE (SSI)

The SSI function provides absolute information on the position via a serial interface. It is particularly suited for applications requiring reliability and robustness in an industrial environment. The SSI design is very simple, only two conduction pairs are required (for clock and data) and in the sensor little more than a shift register and a monoflop to control the same. This provides a cost-effective design. SSI also facilitates the connection of up to three encoders to one common clock. This enables the read-out of several sensors at a defined point in time.

Data transmission is effected as follows: The pulse provided by the control synchronises the data transmission between the encoder and the higher-ranking system. To a transwithted pulse group, the sensor responds with the transmission of position data. The time and speed is thus determined exactly.

Clock and data lines are on high level in idle state. The first trailing edge starts the transmission. The respectively rising edge outputs the data bits successively to the data line starting with MSB. The multiturn value output occurs first. The

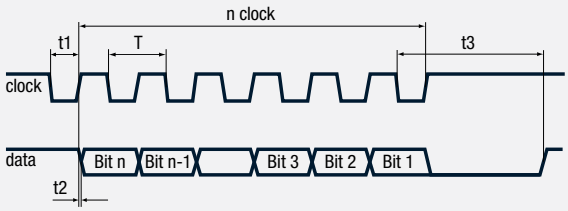

transmission of a complete data word requires n+1 rising edges (n = resolution in bits), e.g. 14 clock signals for a complete readout of a 13 bit encoder. After the last positive edge of the clock signal, the data line remains on low for t3 until the encoder is ready for a new data word. The clock line must stay just as long on high and can subsequently start a new read-out sequence of the encoder with a trailing edge.

Twisted pair data and clock lines should be used for wiring. In case of line lengths above 100m, data and clock lines with a cross section of at least 0.25mm² and supply voltage with at least 0.5mm² should be installed. The clock rate is 1MHz. The SSI clock rate depends on the max. line length and should be adapted as follows:

Line length	SSI clock rate
12,5 m	810 kHz
25 m	750 kHz
50 m	570 kHz
100 m	360 kHz
200 m	220 kHz
400 m	120 kHz
500 m	100 kHz

Clock rate SSI

The clock rate of angular position transmitters with an SSI is the frequency of the clock signal during data transmission. The clock rate is provided by subsequent electronics and must range in the respective liwiths.

Clock +, clock –

These are SSI control lines for synchronous data transmission. Clock + and clock – form a current loop for the assumption of the clock rate free of potential in SSI angular position transmitters.

ZERO ADJUSTMENT

In SSI angular position transmitters, zero may be set at any point of the resolution range without any mechanical adjustment.

CANopen

CANopen is a communication protocol based on CAN and used mainly in automation engineering and networking in complex devices. CANopen is predominantly used in Europe. However, user numbers are increasing both in North America and Asia. CANopen was developed by CiA (CAN in automation), the user and manufacturer association for CANopen, and has been standardised in the European EN 50 325-4 Standard since the end of 2002.

Basic services of CANopen

Several basic services are defined in CANopen:

Request:	Request of a CANopen service by the application
Indication:	Report to the application that a result or a certain message is available
Response:	Response of the application to an indication
Confirmation:	Confirmation to the application that a CANopen service is being performed

Communication objects

CANopen uses four communication objects:

- Service Data Objects (SDO) to parameterise object directory entries,
- Process Data Objects (PDO) to transport realtime data,
- Network Management Objects (NMT) to control the finite state machine of the CANopen device and to monitor nodes,
- Further objects like synchronisation objects, time stamps and error messages.

Object directory

All of the device parameters are included in an Object Directory (OD). In the CANopen device model, the object directory is the link between the application and the CANopen communication unit and contains the description, data type and structure of the parameters as well as the address (index). The object directory is subdivided into 3 parts:

- Communication profile
- Device profile
- Manufacturer-specific part.

Further information under www.can-cia.org

INDEX

A
A210, A220 36
A230s, A230 37
Accessories Position Sensors 103
Accessories Power System Monitoring 73
Active Energy Meters 116
Adapter Sleeve 104
Additional Cables 73, 103
AM-Series 26, 28
A*PLUS* 27, 31

B
Basics 136
Bellow Coupling 107
Bushing-Type Current Transformers 77, 127

C
CB-Analyzer 75
CB-Manager 75
CENTRAX CU3000 / CU5000 44
Configuration Software 76
Converter from USB to RS485 74
Converter from USB to RS232-TT 74
Current Transformers 77, 125

D
Data Management Software 48, 130
DCM 817 56

E
Electromagnetic Compatibility 138
Energymanagement 112
Energymanagement Software 129
Energy Meters 114
Environmental Testing 137
Explosion Protection 142
Extension Modules 38

F
F534 12
F535 13

G
G536 14
G537 15
Galvanic Isolation 140

H
Helical and Cross-Slotted Coupling 108

I
I538, I542 7
I552 8
Inclination Transmitters 96
Intrinsically Safe 144
Important Drive System Variables 110

K
KINAX 2W2 94
KINAX 3W2 92
KINAX HW730 84
KINAX HW730 PoE 86
KINAX N702 98
KINAX N702-CANopen 99
KINAX N702-SSI 100
KINAX N702-INOX 101
KINAX N702-INOX HART 102
KINAX WT707 88
KINAX WT717 90
KINAX WT720 82
Kit Mounting Clamp 104
Kit of Torque Support 104

L
LINAX DR2000 47
LINAX DR3000 47
LINAX PQ3000 / PQ5000 40
Load Optimisation 125

M
Mavosys 10 42
Monitoring and Controlling 43
Mounting Angle 105
Mounting Plate 105
Mounting Foot 106
Mounting Flange 106
Mounting Kit 104
Multifunctional Energy Meters 115
Multifunctional Instruments for Top-Hat Rail 19
Multifunctional Instruments Display / Panel 26

O
Overview Energymanagement 113
Overview Position Sensors 79
Overview Power System Monitoring 5
Overview Signal Converter Active 45
Overview Signal Converter Multifunctional 46
Overview Signal Converter Passive 44

P
P530 11
Plug connector 103
Power Quality 39
PQ Evaluation Software 42
Programming Cables 73, 103
Protection Classes 146

Q
Q531 11

S
Selection Criteria for Shaft Couplings 111
Services 132
Signal adjustment 49
Signal Converter Active 58
Signal Converter Multifunctional 66
Signal Converter Passive 53
SINEAX 2I1 55
SINEAX A20 72
SINEAX B811 64
SINEAX B812 64
SINEAX CAM 22
SINEAX DM5000 19
SINEAX DM5S / DM5F 21
SINEAX SI815 57
SINEAX TI801/802 56
SINEAX TI807 57
SINEAX TI816 55
SINEAX TP619 62
SINEAX TV804 62
SINEAX TV808-12 65
SINEAX TV809 67
SINEAX TV815 61
SINEAX TV819 63
SINEAX TVD825 63
SINEAX V604s 68, 69
SINEAX VB604s 70
SINEAX VC604s 71
SINEAX VQ604s 72
SINEAX V608 53
SINEAX V610 53
SINEAX V611 54
SINEAX V620 61
SINEAX V624 66
SINEAX VS30 54
SINEAX VS40 58
SINEAX VS46 58
SINEAX VS50 59
SINEAC VS52 59
SINEAX VS54 60
SINEAX VS70 60
SIRAX Display-Series 34, 35
SIRAX DIN Rail-Series 16
SMARTCONTROL 122
SMARTCOLLECT 48, 130
Split-Core Current Transformers 125, 126
Spring Washer Coupling 109
Summation Stations 120

T
Technical Definition Position Sensors 146
Test Confirmation 135
Test Record 135
Transmitter for Angular Position 80

U
U543, U539 9
U553, U554 10
Unifunctional Transducers for Top-Hat Rail 6

V
Videographic Recorders 46

W
Winding Current Transformers 128

NOTES

CAMILLE BAUER

RELY ON US

SHOWS

SECONDS

SHOWS

1’524 PRECISE VALUES

SINEAX AM
ADVANCED MONITOR

SWISS PRECISION

FOR YOUR ENERGY – THAT CAN BE OPERATED BY ANYONE

For us, precision means not only measuring absolutely accurately but also recording as many values as possible. SINEAX internally records 1’524 values of your electrical grid and measures up to the 60th harmonic – the perfect base for your energy monitoring.

FIND OUT MORE NOW

www.sineax.ch

GMC INSTRUMENTS

GOSSEN METRAWATT

GOSSEN

Further fields of the GMC-Instruments Group:

TEST AND MEASUREMENT

TEST AND MEASUREMENT

Being a leading provider of measuring and testing technology, we offer our customers a wide and modern portfolio of instruments.
High-quality multimeters, device testers, installation test devices as well as an extensive service program – this is what Gossen Metrawatt stands for.

Secutest

Metrahit

Profitest

MEDICAL ENGINEERING

MEDICAL ENGINEERING

More than 100 years of experience in measuring and testing technology combined with state-of-the-art standards guarantee the highest degree of quality and reliability in sensitive areas. Our medical engineering instruments ensure the correct and safe operation of often vital equipment.

Seculife DF Pro

Seculife Hit

Seculife SR

PHOTOGRAPHY

PHOTOGRAPHY AND LIGHT MEASURING

Gossen Foto- und Lichtmesstechnik GmbH is specialised in light measurement and has decades of experience in this field.
The portfolio comprises instruments to determine illumination intensity and light density and to monitor interior light.

Mavo-Monitor

Mavolux

Mavo-Spot

GMC INSTRUMENTS

GOSSEN METRAWATT

CAMILLE BAUER

DISTRIBUTION PARTNERS IN OVER 40 COUNTRIES

GMC-I Messtechnik GmbH
Südwestpark 15
D-90449 Nürnberg
TEL +49 911 8602-111 · FAX +49 911 8602-777
www.gossenmetrawatt.com · info@gossenmetrawatt.com

Electromediciones Kainos S.A.
Paseo de los Ferrocarriles Catalanes · 97-117 Planta 1ª
Local 2 · E-08940 Cornellá de Llobregat · Barcelona
TEL +34 934 742 333 · FAX +34 934 743 470
www.kainos.es · kainos@kainos.es

GMC-Instruments Italia S.r.l.
Via Romagna, 4
I-20853 Biassono (MB)
TEL +39 039 2480 51 · FAX +39 039 2480 588
www.gmc-instruments.it · info@gmc-i.it

GMC-Instruments Nederland B.V.
Daggeldersweg 18
NL-3449 JD Woerden
TEL +31 348 42 11 55 · FAX +31 348 42 25 28
www.gmc-instruments.nl · info@gmc-instruments.nl

GMC-Instruments France SAS
3 rue René Cassin
F-91349 Massy Cedex
TEL +33 1 6920 8949 · FAX +33 1 6920 5492
www.gmc-instruments.fr · info@gmc-intruments.fr

GMC-měřicí technika s.r.o.
Fügnerova 1a
CZ-67801 Blansko
TEL +420 516 482 611/-617 · FAX +420 516 410 907
www.gmc.cz · gmc@gmc.cz

GMC-Instruments Austria GmbH
Richard-Strauss-Str. 10 / 2
A-1230 Wien
TEL +43 1 890 2287 · FAX +43 1 890 2287 99
www.gmc-instruments.co.at · office@gmc-instruments.co.at

GMC-Instruments (Tianjin) Co., Ltd
Rm.710 · Jin Ji Ye BLD. No.2 · Sheng Gu Zhong Rd.
P.C.: 100022 · Chao Yang District
TEL +86 10 84798255 · FAX +86 10 84799133
www.gmci-china.cn · info@gmci-china.cn

YOUR DISTRIBUTION PARTNER

Camille Bauer Metrawatt AG
Aargauerstrasse 7 ▪ 5610 Wohlen ▪ Switzerland
TEL +41 56 618 21 11 ▪ FAX +41 56 618 21 21

www.camillebauer.com ▪ info@cbmag.com

FSC www.fsc.org MIX Papier aus verantwortungsvollen Quellen FSC® C011710

Subject to change without notice ▪ CB-1037-00-02-EN-01.18