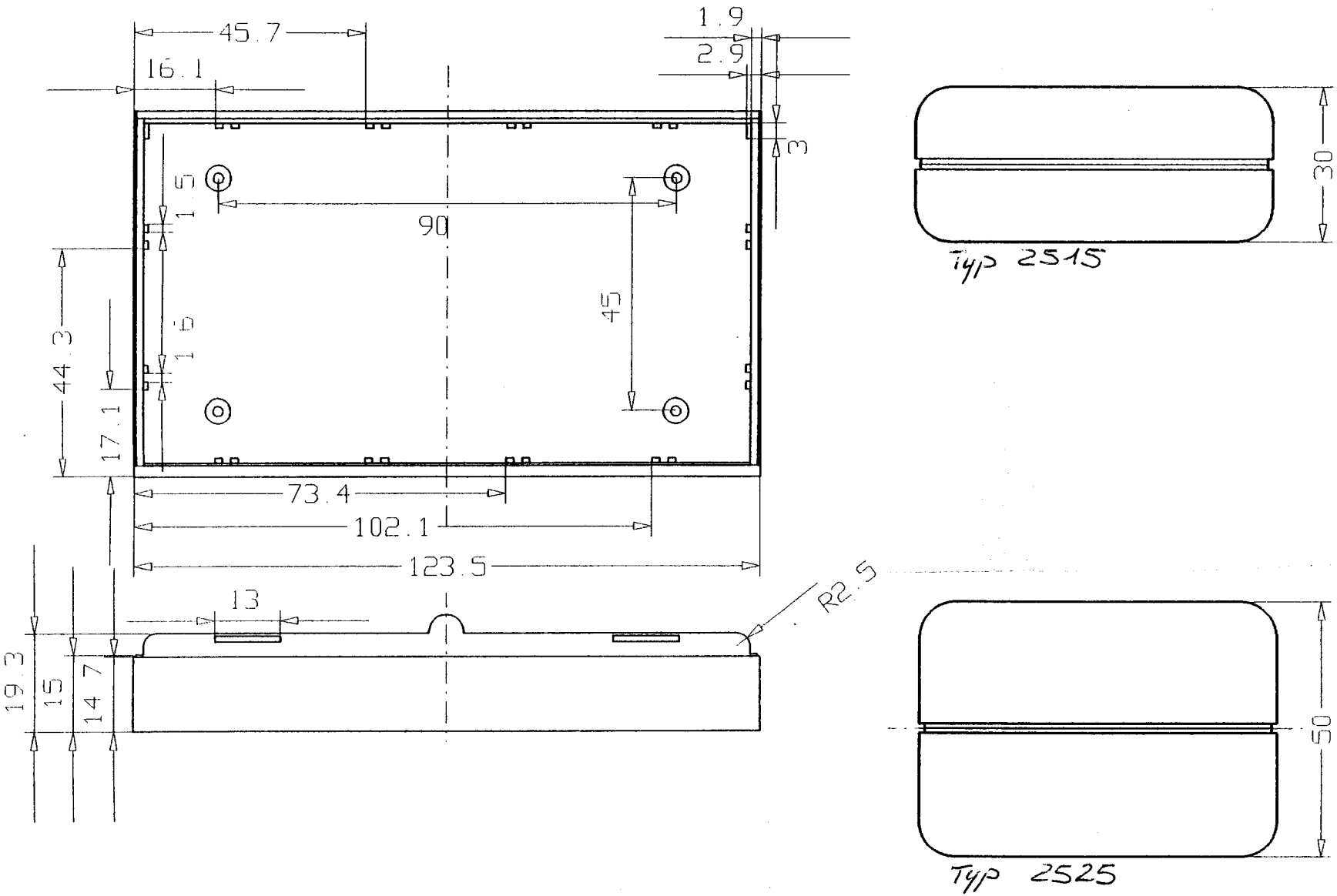
45.7
16.1
1.9
2.9
3
1.5
90
45
1.6
44.3
17.1
73.4
102.1
123.5
13
R2.5
19.3
15
14.7
30
Typ 2515
50
Typ 2525