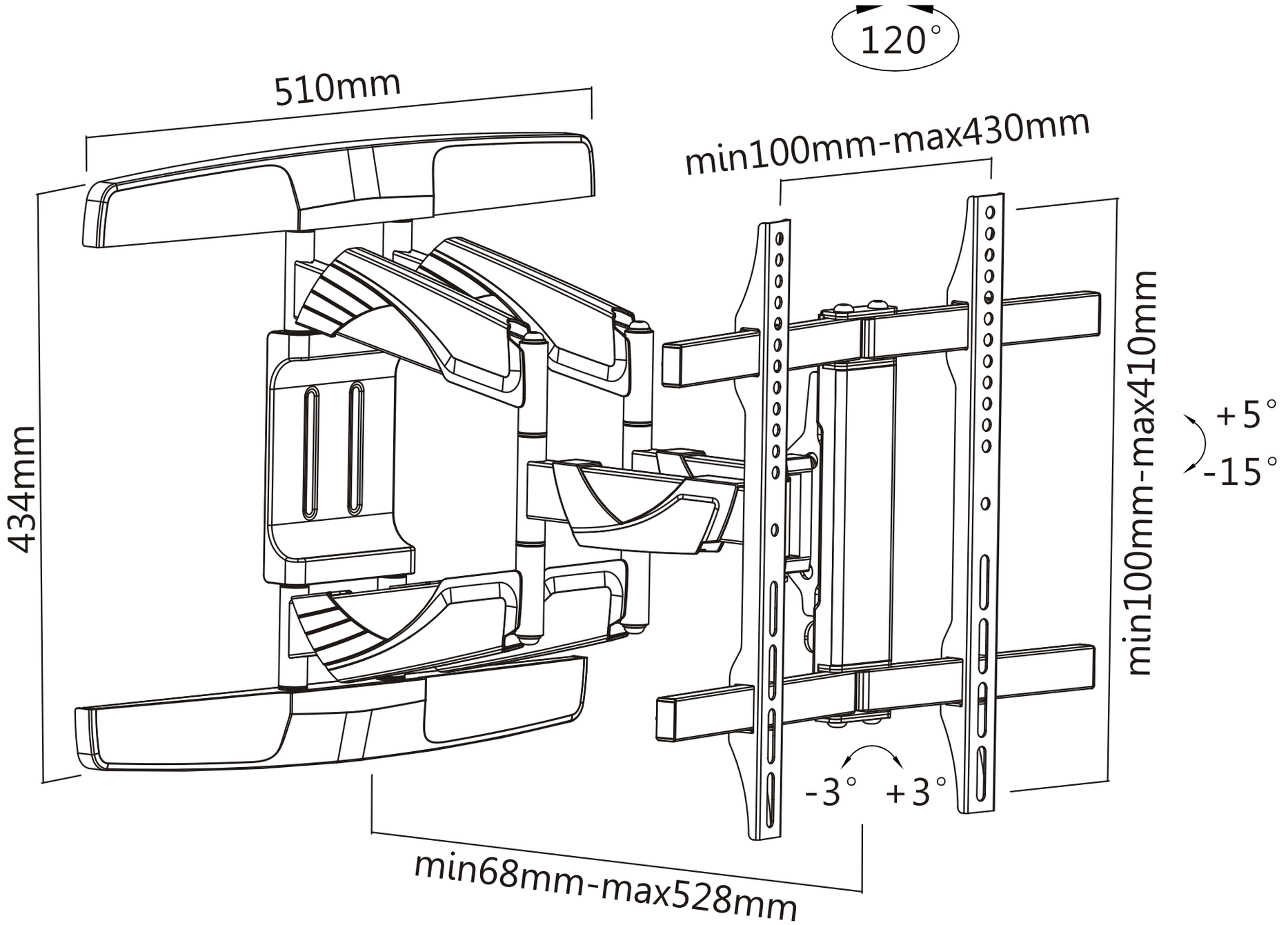
120°
510mm
min100mm-max430mm
434mm
min100mm-max410mm
+5°
-15°
-3°
+3°
min68mm-max528mm