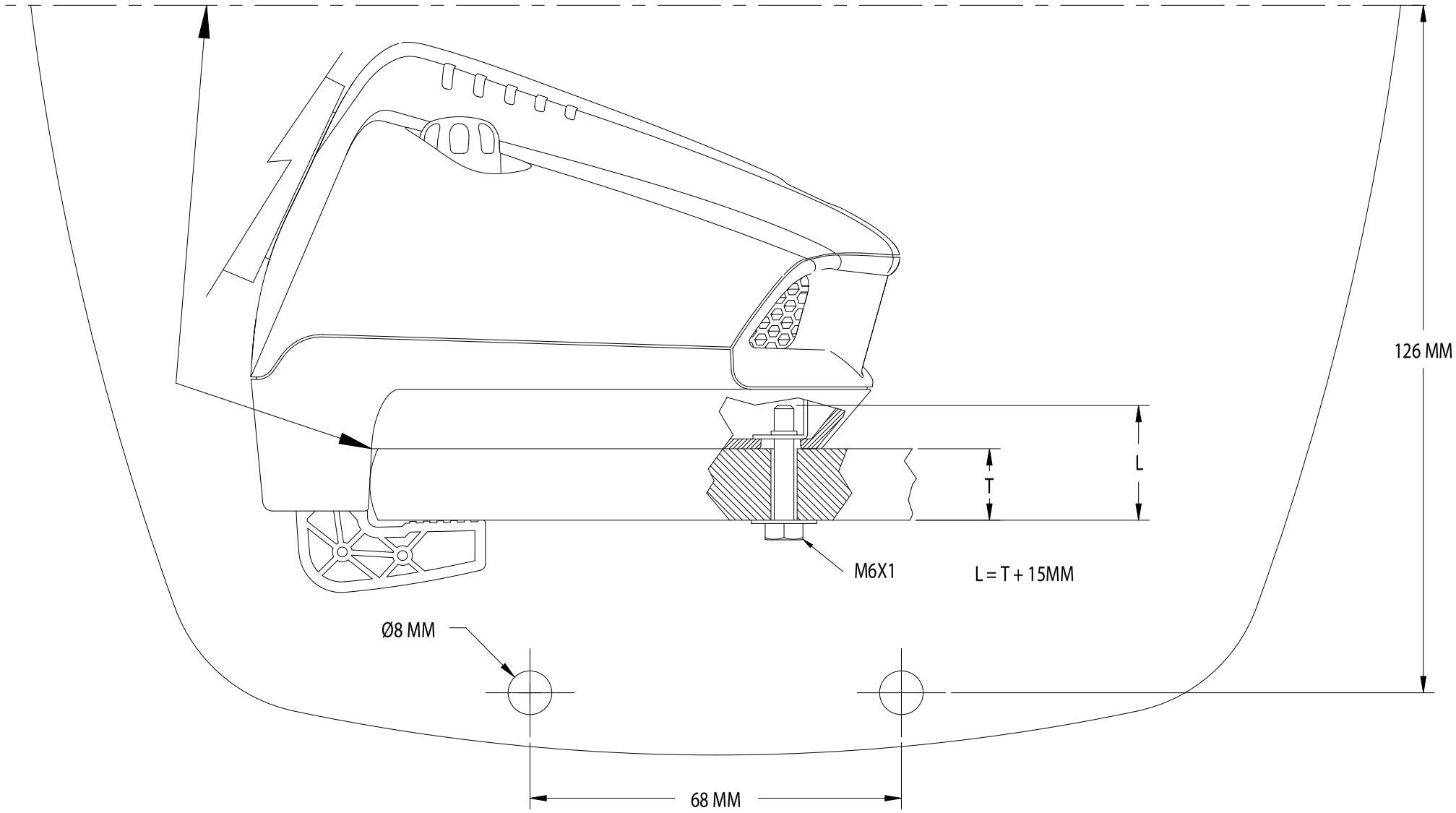
126 MM
L
T
M6X1
L = T + 15MM
Ø8 MM
68 MM