Technische Daten

Pumpenname OPTIMA M

Besteller	Datum 12-February-2020	Firma
Ansprechpartner	Art.-Nr.	Issued by
Telefon	Projekt	Telefon
E-Mail	Projektnummer	E-Mail

Requested data

1	Pumpenbezeichnung	SUBMERSIBLE SUMP PUMPS	Fluid		Wasser, rein
2	Pumpenanzahl / Reserve	1 / 0	Mediumtemperatur °C		20
3	Förderstrom m³/h	0	Kinematische Viskosität mm²/s		1
4	Förderhöhe m	0	Dampfdruck bar		0,022
5	Geodätische Höhe m	0	PH Wert		7
6	Vordruck (pin) bar	0,1	Dichte kg/m³		1000
7	Available system NPSH	0	Feststoffe Weight %		0
8	Umgebungstemperatur °C	20			

Pumpe

9	Pumpenname	OPTIMA M	Frequenz Hz		50
10	Bauart	SUBMERSIBLE SUMP PUMPS	Installationsart		STANDARD
11	Hersteller	EPE	Laufrad Durchmesser	Max. mm	80
12	Drehzahl 1/min	2800		Designed mm	80
13	No. of Stage	1		Min. mm	80
14	Anschluss Saugseite	Strainer	Förderstrom	Operating m³/h	
15	Anschluss Druckseite	UNI ISO 228		Max- m³/h	9
16	Max Working Pressure bar			Min- m³/h	1,2
17	Shut-off head bar	0,74	Förderhöhe	Operating m	
18	Gesamtgewicht kg	See the table of "Dimensions".		- (Qmax.) m	1,5
19	Wellenleistung kW			- (Qmin.) m	7,1
20			Max. Shaft Power at max. impeller kW		
21	NPSH - Wert der Pumpe m		Efficiency %		

Materials

22	FlEelrad	PPE+PS glass fiber reinforced		
23	Spiralgehäuse	AISI 304		
24	Welle	AISI 303+AISI 303 ceramic coated shaft sleeve		
25				
26				
27				

Motor

28	Hersteller	EPE Standard	Isolierklasse		F
29	Typ	OPTIMA M_230_Single Phase	Phasen		1~
30	Ausführung	Submersible dry type / 50 Hz / Polpaarzahl 1	Baugröße		
31	Nennleistung kW	0,25	Gewicht	kg	0
32	Polzahl	2	El. Spannung	V	230
33	Drehzahl 1/min	2800	El. Stromstärke	A	1,9
34	Schutzart	IP 68			
35					

Remarks

EBARA

Kennlinie

Pumpenname OPTIMA M

Besteller	Datum 12-February-2020	Firma
Ansprechpartner	Art.-Nr.	Issued by
Telefon	Projekt	Telefon
E-Mail	Projektnummer	E-Mail

Requested data

1	Förderstrom	m³/h	0
2	Förderhöhe	m	0
3	Geodätische Höhe	m	0

Pumpe

Operating Flow	m³/h		Frequenz	Hz	50
Operating Head	m		Polzahl		2
Laufrad Durchmesser	Designed mm	80	Drehzahl	1/min	

Teststandard: ISO 9906:2012 - Grad3B

Wasser, rein [100%] ; 20°C; 998,3kg/m³; 1mm²/s

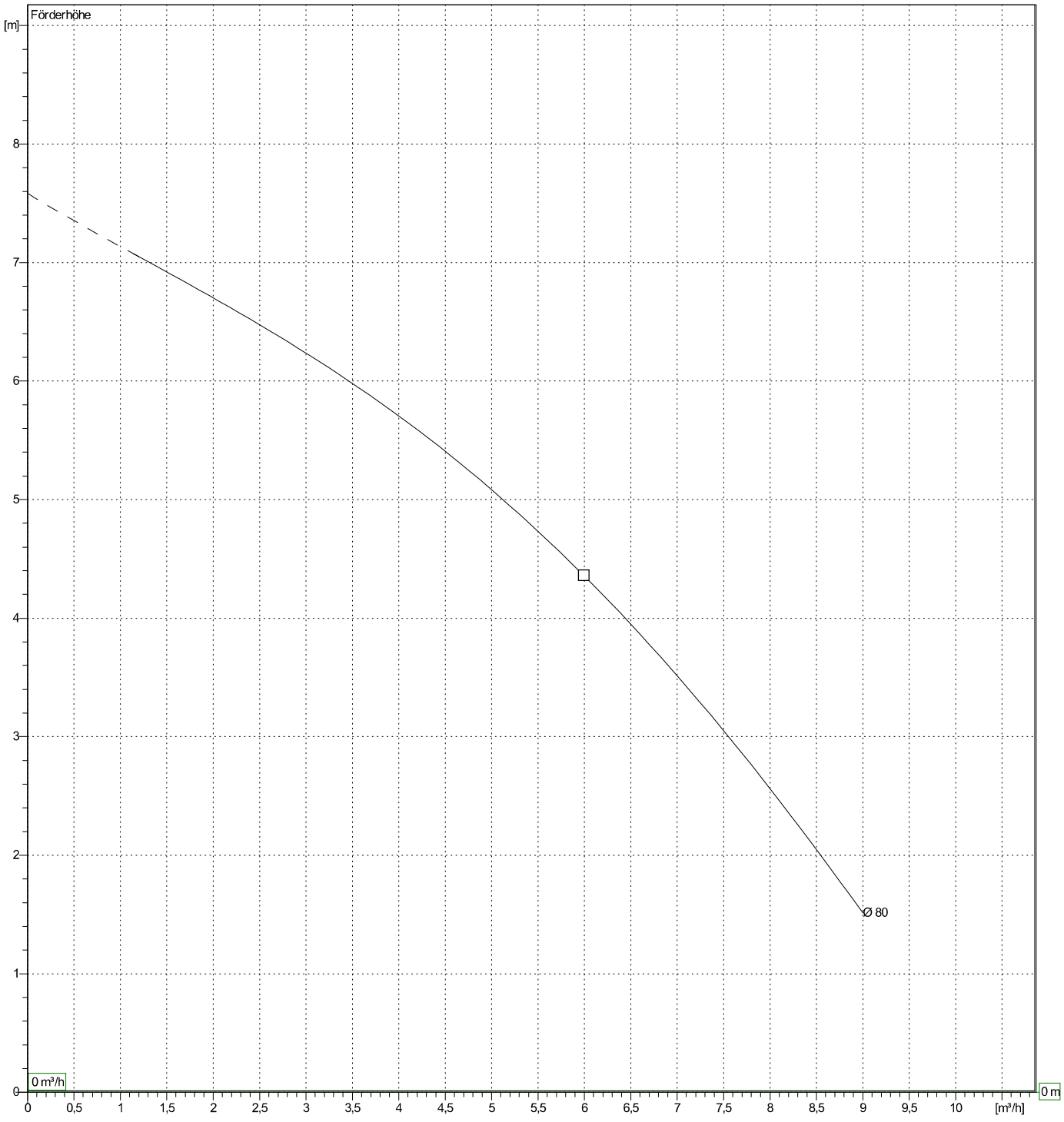

EBARA

Abmessungen

Pumpenname OPTIMA M

Besteller	Datum 12-February-2020	Firma
Ansprechpartner	Art.-Nr.	Issued by
Telefon	Projekt	Telefon
E-Mail	Projektnummer	E-Mail

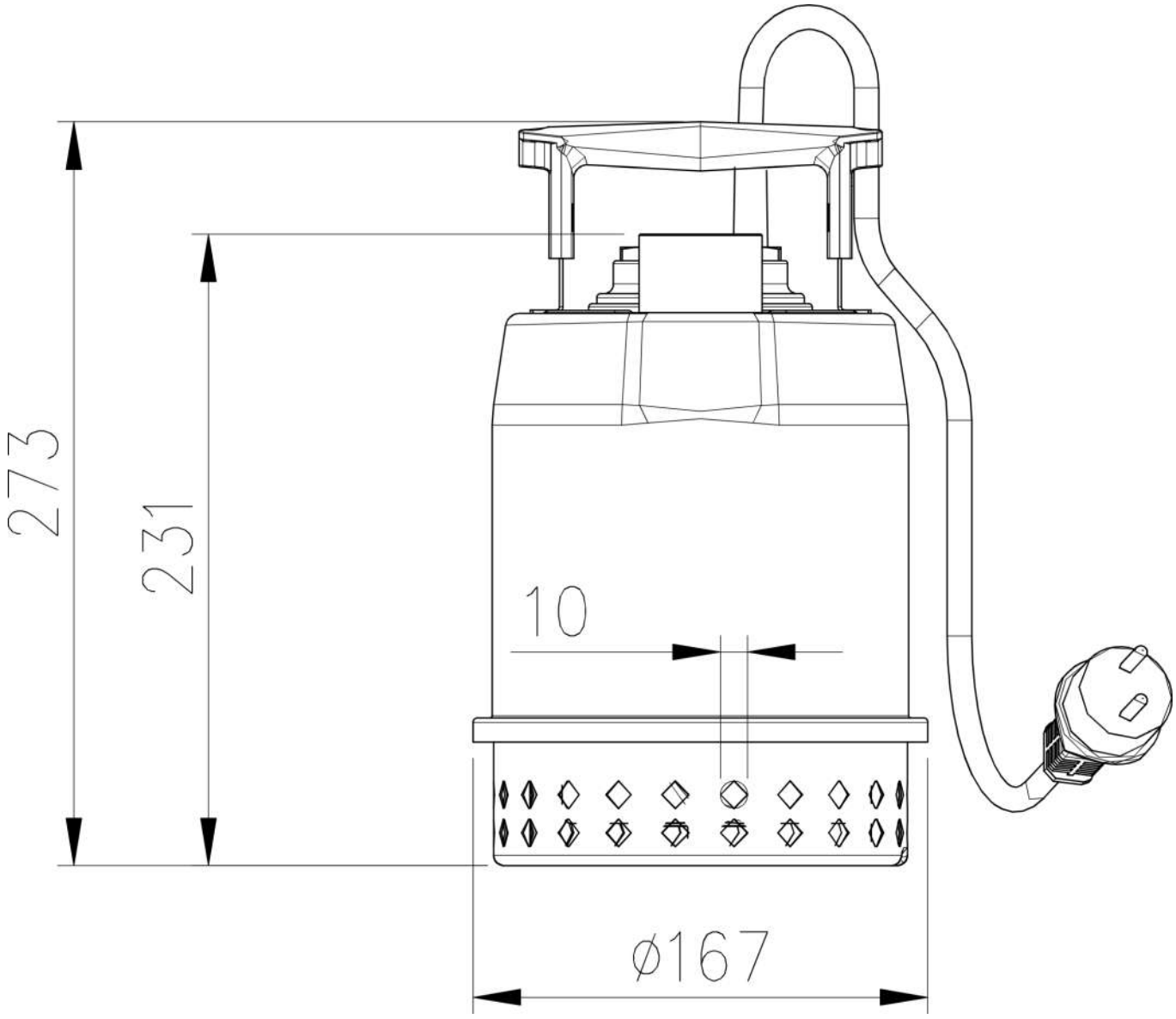

Abmessungen in mm

1	Weight PUMP	4.2 kg						

EBARA

(1/4)
Konstruktion

Pumpenname OPTIMA M

Besteller	Datum 12-February-2020	Firma
Ansprechpartner	Art.-Nr.	Issued by
Telefon	Projekt	Telefon
E-Mail	Projektnummer	E-Mail

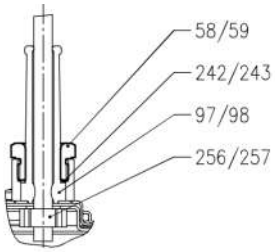

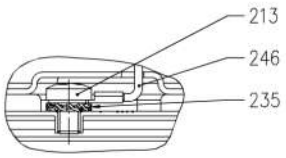

GROUND WIRE

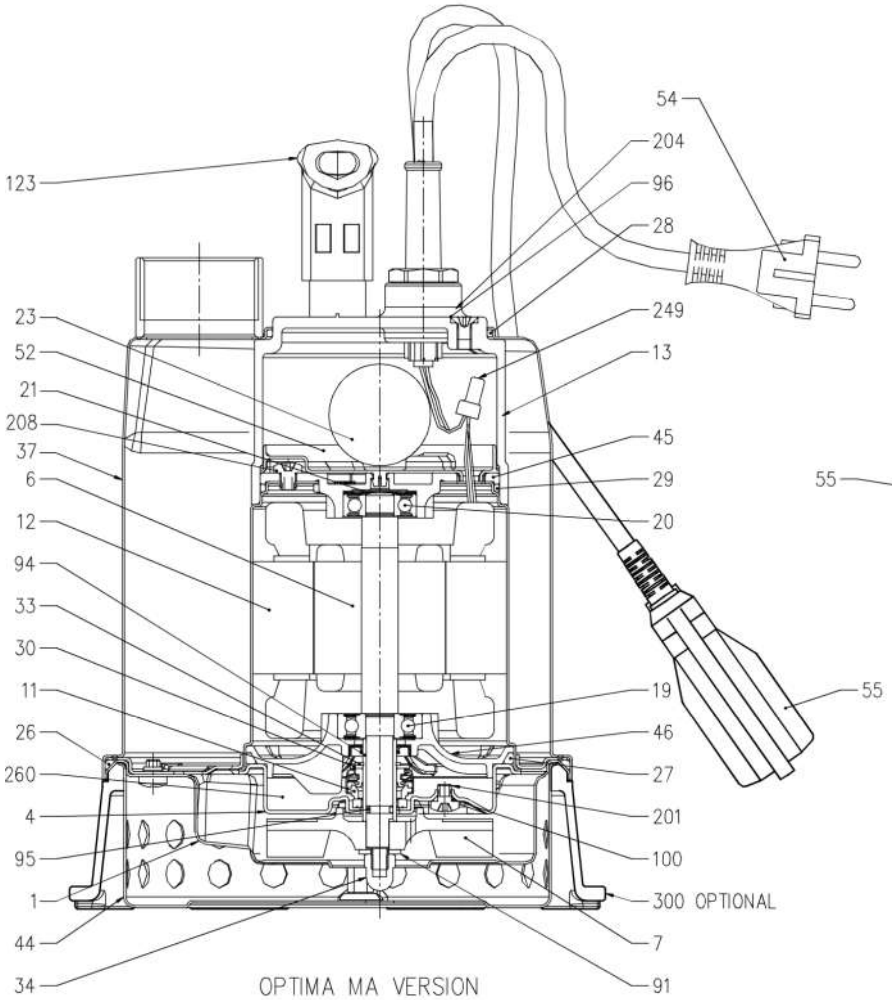

OPTIMA MA VERSION

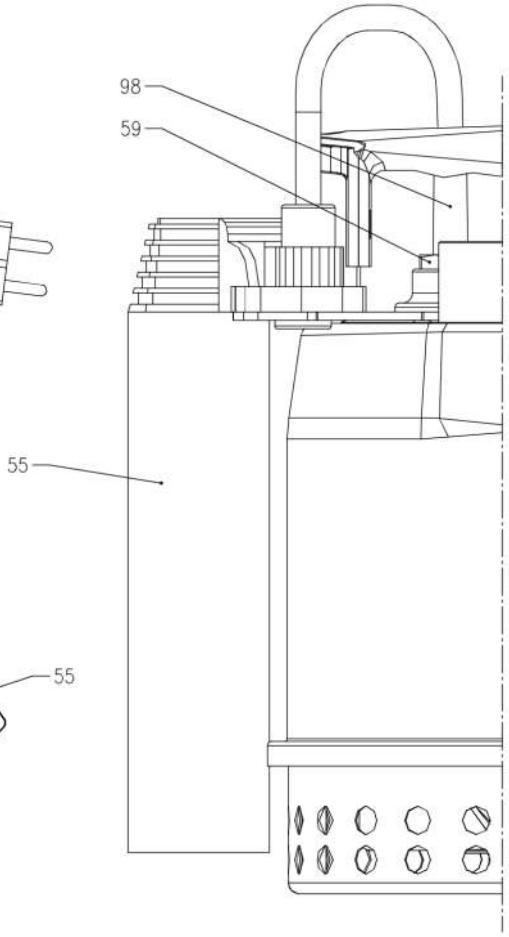

OPTIMA MS VERSION

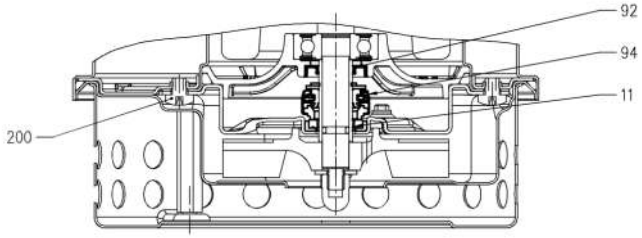

MOTOR FIXING

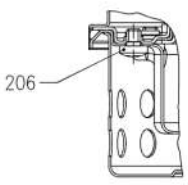

SUCTION COVER FIXING

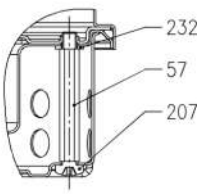

STRAINER FIXING

EBARA

(2/4)
Konstruktion

Pumpenname OPTIMA M

Besteller	Datum 12-February-2020	Firma
Ansprechpartner	Art.-Nr.	Issued by
Telefon	Projekt	Telefon
E-Mail	Projektnummer	E-Mail

N°	PART NAME	MATERIAL	DIMENSIONS	STANDARD	Q.TY
1	Suction cover	EN 1.4301 (AISI 304)	-	-	1
4	Casing cover	EN 1.4301 (AISI 304)	-	-	1
6	Shaft with rotor	EN 1.4305 (AISI 303)	-	-	1
7	Impeller	PPE+PS-HI-GF20	-	-	1
11	Mechanical seal [1]	[1]	[1]	-	1
12	Motor frame with stator	EN 1.4301 (AISI 304)	-	-	1
13	Motor cover	PP-GF30 class V-0	-	-	1
19	Lower ball bearing	-	-	-	1
20	Upper ball bearing	-	-	-	1
21	Adjusting ring	-	-	-	1
23	Capacitor	-	-	-	1
26	O-ring	NBR	159,5x3	-	1
27	O-ring	NBR	88,5x3,53	-	1
28	O-ring	NBR	75,87x2,62	-	1
29	O-ring	NBR	75,87x2,62	-	1
30	Washer	EN 1.4301 (AISI 304)	12x21x1	-	1
33	Seeger ring	Carbon steel TC80	12	UNI 7435	1
34	Impeller nut	A2 - 70 UNI 7323	M6	UNI 5721	1
37	Outer casing	EN 1.4301 (AISI 304)	-	-	1
44	Strainer	EN 1.4301 (AISI 304)	-	-	1
45	Upper bearing housing	EN 1706 AC-46000 D	-	-	1
46	Lower bearing housing	EN 1706 AC-46000 D	-	-	1
52	Terminal insulating base	PA6 class V-0	-	-	1
54	Power cable	-	-	-	1
55	Switch [2] [3]	-	-	-	1
57	Spacer	EN 1.4301 (AISI 304)	-	-	2
58	Power cable connector	PA66-GF30	-	-	1
59	Switch cable connector [2]	PA66-GF30		-	1
91	Washer	EN 1.4301 (AISI 304)	-	-	1
92	Lip seal	NBR	22x12x4	-	1
94	Shaft sleeve	EN 1.4305 (AISI 303) ceramic coated	-	-	1
95	O-ring	NBR	6,07x1,78	-	1
96	O-ring	NBR	4,48x1,78	-	1
97	Power cable boot	NBR	-	-	1
98	Switch cable boot [2]	NBR	-	-	1
100	O-ring	NBR	4,48x1,78	-	1
123	Handle	PP	-	-	1
200	Screw	A2 - 70 UNI 7323	M5x6	UNI 7687	4
201	Screw	A2 - 70 UNI 7323	M5x6	UNI 7687	1
204	Screw	A2 - 70 UNI 7323	M5x6	UNI 7687	1
206	Screw	A2 - 70 UNI 7323	M5x6	UNI 7687	3
207	Screw	A2 - 70 UNI 7323	M5x6	UNI 7687	2
208	Screw	A2 - 70 UNI 7323	M5x6	UNI 7687	3
213	Screw	A2 - 70 UNI 7323	M4x6	UNI 7687	1
232	Washer	PA6	5,5x10x1	-	2
235	Washer	Zinked Steel	4	UNI 8842	1
242	Washer	EN 1.4301 (AISI 304)	13,4x15,9x1	-	1
243	Washer [2]	EN 1.4301 (AISI 304)	13,4x15,9x1	-	1
246	Ground wire	-	-	-	1
249	Cap Terminal	-	-	-	4
256	Cable holder	-	-	-	1
257	Cable holder [2]	-	-	-	1
260	Oil	Esso Marcol 152	-	-	40 cc
300	Minimum suction system [4]	Thermoplastic elastomer vulcanizate	-	-	-

[1] See CONSTRUCTION 4
[2] Only for automatic version
[3] It could be floating or magnetic type
[4] See CONSTRUCTION 3

(3/4)
Konstruktion

Pumpenname OPTIMA M

Besteller	Datum 12-February-2020	Firma
Ansprechpartner	Art.-Nr.	Issued by
Telefon	Projekt	Telefon
E-Mail	Projektnummer	E-Mail

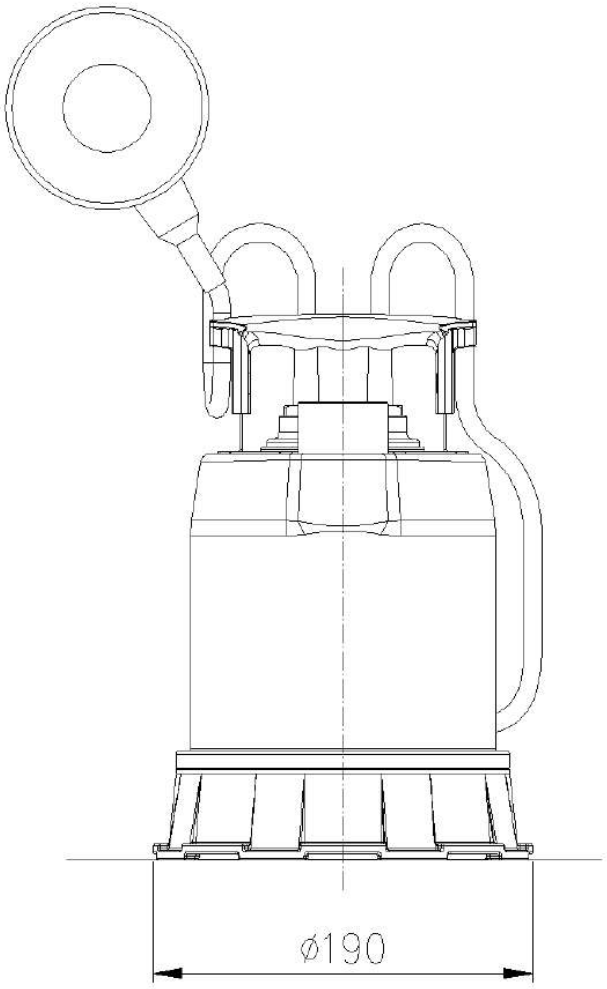

LEVEL	
Minimum starting suction level	10 mm
Minimum suction level capability	3 mm

COMPATIBILITY			
Type pumps	Version		
	M	MA	MS
OPTIMA	✓	✓	×

(4/4)
Konstruktion

Pumpenname OPTIMA M

Besteller	Datum 12-February-2020	Firma
Ansprechpartner	Art.-Nr.	Issued by
Telefon	Projekt	Telefon
E-Mail	Projektnummer	E-Mail

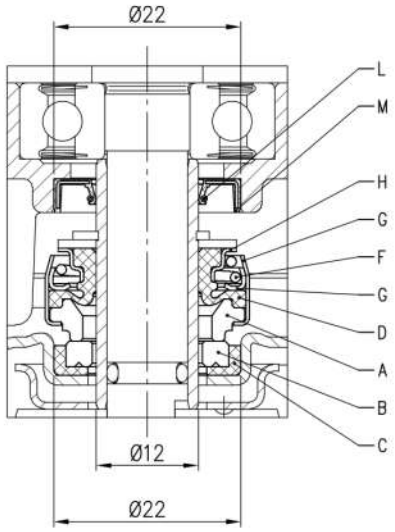

REF	PART NAME	MATERIAL Standard version
A	Rotary seal ring	Carbon graphite
B	Stationary seal ring	Ceramic
C	Gasket	NBR
D	Bellows	NBR
F	Self driving spring	EN 1.4301 (AISI 304)
G	Frame	EN 1.4301 (AISI 304)
H	Retainer ring	EN 1.4301 (AISI 304)
L	Spring	EN 1.4318 (AISI 302)
M	Lip	NBR