Schneider Electric

UFB-700M/900M

With cable exit in centre position

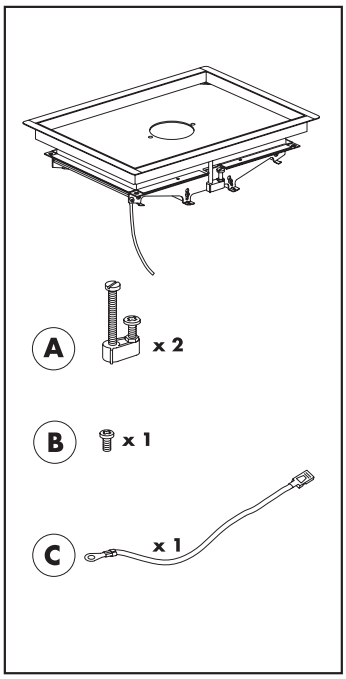

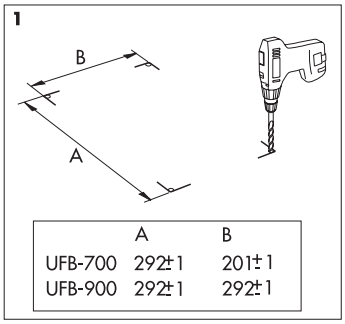

	A	B
UFB-700	292±1	201±1
UFB-900	292±1	292±1

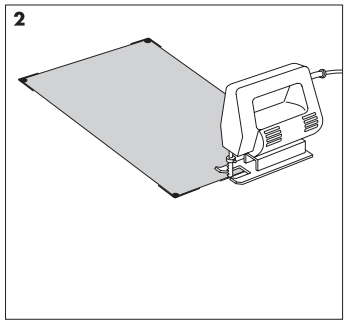

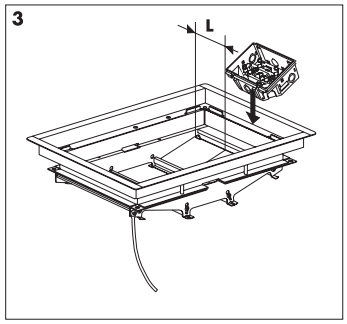

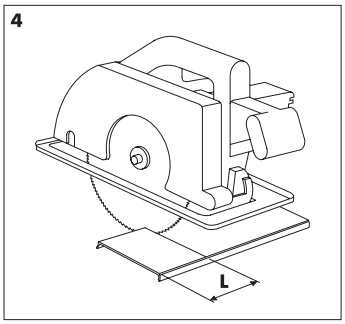

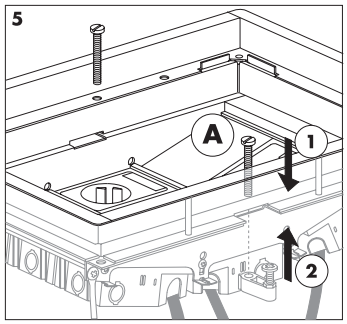

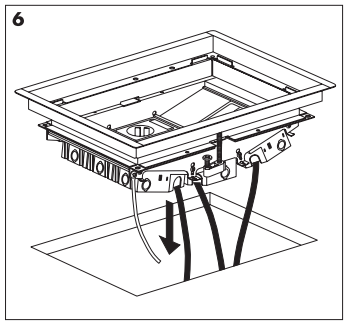

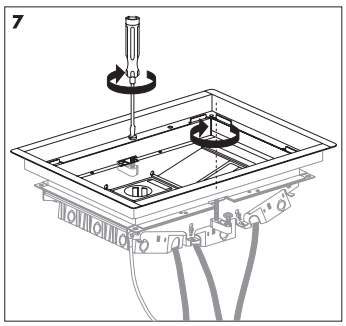

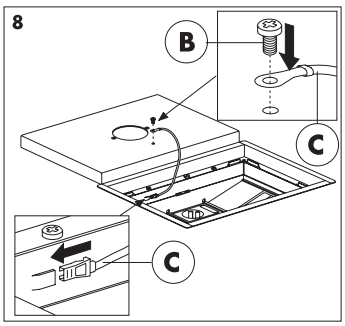

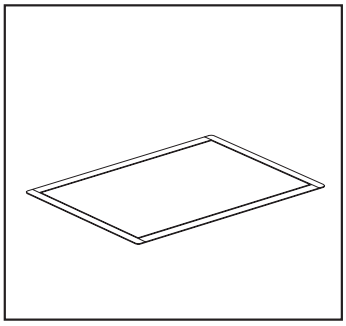

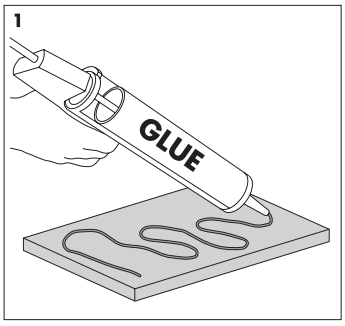

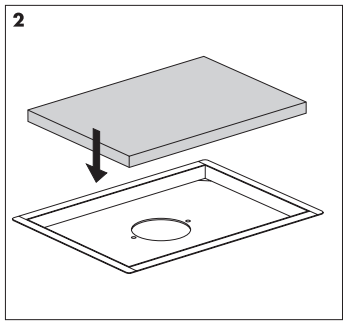

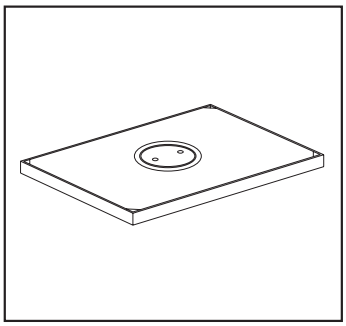

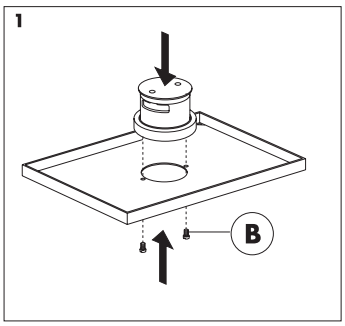

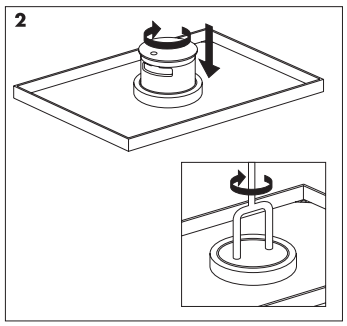

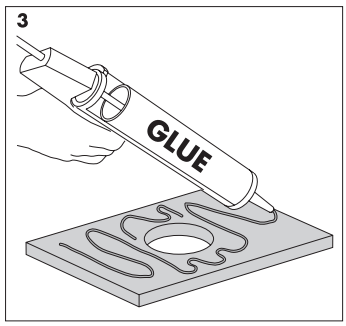

UFB-700M/900M

With cable exit in centre position

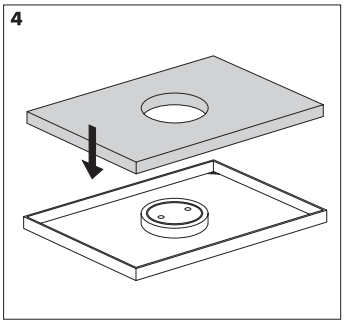

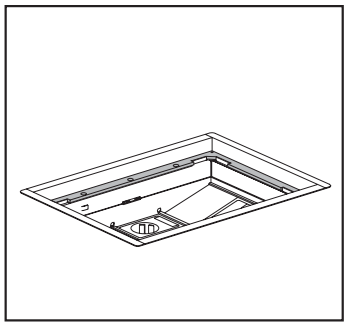

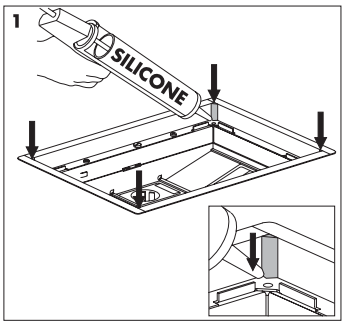

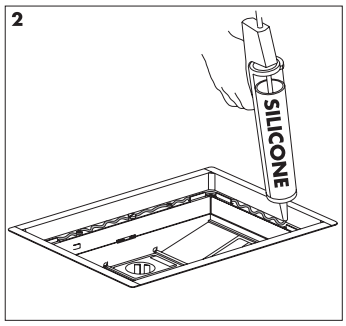

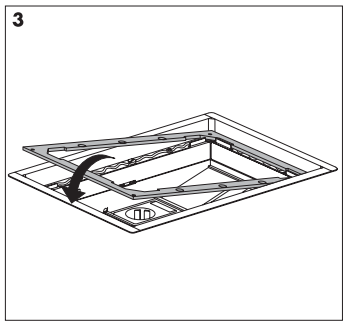

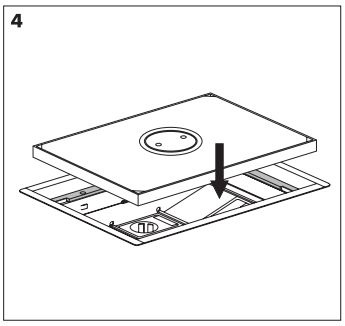

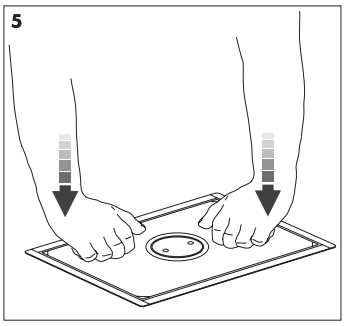

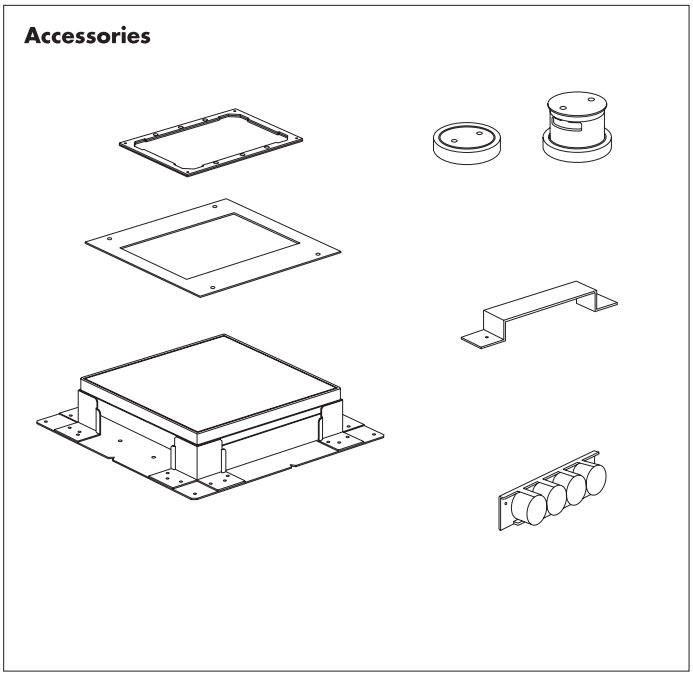

Art.No. 0075332 / 20060417 / 1008

Schneider Electric