E-BOX M12, Not-Halt, Leuchtdrucktaster, 2 Ö + 1 S, Gold, M12 8-polig A-kodiert, Rückstellung durch Drehen, Pilzkopf rot, Blende FLEXLAB, beleuchtbar



Haupt- / Anwendungsgebiete

- Messen-Steuern-Regeln
- Maschinen- und Anlagenbau
- Baumaschinen
- Industrie-Roboter
- Modellbau
- Hausinstallation

Spezielle Features

- Kompakte Abmessungen: 109 x 40 x 27 mm
- Diverse Betätiger-Anzeige Kombinationen aus der Befehlsgeräte-Baureihe RAFIX 22 FS+
- Mit gelbem Gehäuseoberteil für Kombinationen mit Not-Halt-Betätiger
- Mit grauem Gehäuseoberteil für Drucktaster-Kombinationen
- Befestigung mit zeitsparender Ein-Loch-Schraubbefestigungstechnik, besonders geeignet für Aluprofilschienen oder alternativ Direktbefestigung mit M4 Schrauben
- Anschluss mit M12-Stecker: "Plug and Play"

Beschreibung

Die E-Box M12 ist ein anschlussfertiges, komplett bestücktes Gehäuse inklusive Betätiger und Schaltelementen. So können z.B. Not-Halt-, Ein-Aus und Auf/Ab-Funktionen, auch mit zusätzlichen Statusanzeigen mit den sehr kompakten Abmessungen der E-Box realisiert werden.Die Montage: Clip anschrauben, Box aufsetzen, Stecker anschließen, prüfen und fertig. Die E-Box M12 kann überall dort eingesetzt werden, wo einzelne Befehlsgeräteeinheiten an dezentralen Einsatzorten benötigt werden. Typisch zum Beispiel für Not-Halt Applikationen entlang einer Fertigungseinrichtung oder am Schutzzaun. Die Abmessungen der E-Box M12 orientieren sich an dem Kantenmaß einer 40 mm Profilschiene und auch das Montagekonzept ist darauf ausgelegt.

Technische Daten

Allgemein

Betätiger Position 1	Not-Halt
Farbe	gelb
Farbe des Pilzes	rot
Farbe der Blende	FLEXLAB
Eigenschaft der Blende / des Pilzes	transluzent
Farbe des Bundes	dunkelgrau
Farbe des Frontringes	silbermetallic
Farbe des Leuchtmittels	weiß
Form des Bundes	rund

Direkte Links

- RAFI eCatalog

The information in this data sheet only contains general descriptions and / or performance features, which may not apply precisely as described to the respective application, and which my change due to further product enhancements. The technical data, illustrations and other information about our products are the mere results of individual technical testing. These descriptions and other product features are only binding if they expressly agreed upon at the time of the conclusion of a binding contract. In all other cases, we reserve the right to make technical changes as well as changes of availability. Pictures and other graphic illustrations are approximations only. All product names may be trademarks or brand names of the RAFI Group or any other sub-supplier of RAFI. The use of such by any third parties for their own purposes may infringe the rights of the respective entity holding those rights.

RAFI GmbH & Co. KG

Ravensburger Str. 128-134
88276 Berg / Ravensburg
Germany
www.rafi-group.com,
info.headquarters@rafi-group.com

Arbeitstemperatur, min.	-25 °C
Arbeitstemperatur, max.	70 °C
Lagertemperatur, min.	-40 °C
Lagertemperatur, max.	80 °C
beleuchtbar	ja
Leuchtmittel	LED
Verpackung	Karton
Verpackungseinheit	1 Stück
Nettogewicht	116 g
Lebensdauer	50.000 Zyklen
B10	65.000 Zyklen
B10d	130.000 Zyklen
Schutzart frontseitig gem. DIN EN 60529	IP65
Schutzart rückseitig gem. DIN EN 60529	IP65
Schutzklasse	II
MOQ Auftrag	5 Stück
RoHS konform	ja
REACH konform	ja

Einbaumaße

Außenmaß Länge	123,2 mm
Außenmaß Breite	40 mm
Außenmaß Höhe	60,2 mm

Mechanische Kennwerte

Kontaktfunktion	2 Ö + 1 S
Kontaktwerkstoff	Gold
Rückstellung	durch Drehen
Befestigung	Montageclip
Anschluss rückseitig	M12 8-polig A-kodiert
PIN 1	Schließer 1
PIN 2	Schließer 1
PIN 3	Öffner 1
PIN 4	Öffner 1
PIN 6	GND
PIN 5	LED +
PIN 7	Öffner 2
PIN 8	Öffner 2

Elektrische Kennwerte

Betriebsspannung des Leuchtmittel, max.	24 V
Schaltspannung, min.	5 V
Schaltspannung, max.	35 V
Spannungsart	AC / DC
Nenn-Betriebsspannung	5-35 V
Schaltstrom, min.	0,001 A
Schaltstrom, max.	0,1 A

The information in this data sheet only contains general descriptions and / or performance features, which may not apply precisely as described to the respective application, and which my change due to further product enhancements. The technical data, illustrations and other information about our products are the mere results of individual technical testing. These descriptions and other product features are only binding if they expressly agreed upon at the time of the conclusion of a binding contract. In all other cases, we reserve the right to make technical changes as well as changes of availability. Pictures and other graphic illustrations are approximations only. All product names may be trademarks or brand names of the RAFI Group or any other sub-supplier of RAFI. The use of such by any third parties for their own purposes may infringe the rights of the respective entity holding those rights.

RAFI GmbH & Co. KG

Ravensburger Str. 128-134
88276 Berg / Ravensburg
Germany
www.rafi-group.com,
info.headquarters@rafi-group.com

Schaltleistung, max.	0,25 W
Verlustleistung	0,15 W

The information in this data sheet only contains general descriptions and / or performance features, which may not apply precisely as described to the respective application, and which my change due to further product enhancements. The technical data, illustrations and other information about our products are the mere results of individual technical testing. These descriptions and other product features are only binding if they expressly agreed upon at the time of the conclusion of a binding contract. In all other cases, we reserve the right to make technical changes as well as changes of availability. Pictures and other graphic illustrations are approximations only. All product names may be trademarks or brand names of the RAFI Group or any other sub-supplier of RAFI. The use of such by any third parties for their own purposes may infringe the rights of the respective entity holding those rights.

RAFI GmbH & Co. KG

Ravensburger Str. 128-134
88276 Berg / Ravensburg
Germany
www.rafi-group.com,
info.headquarters@rafi-group.com

Zeichnungen

Maß-Zeichnungen

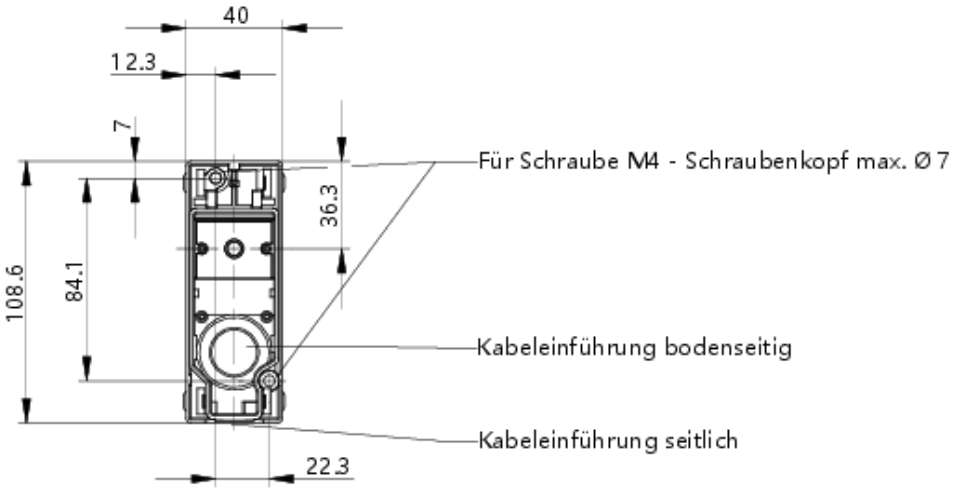

System-Zeichnung

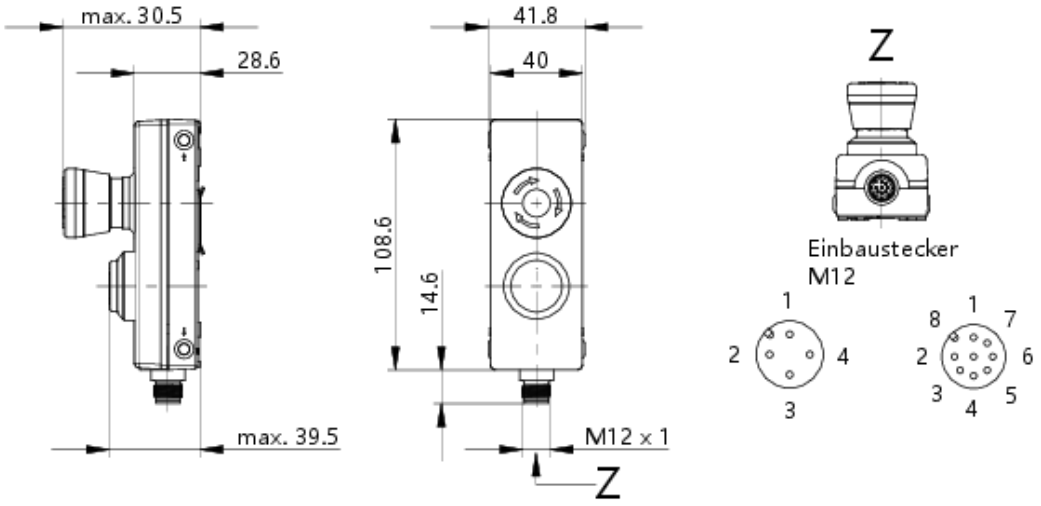

The information in this data sheet only contains general descriptions and / or performance features, which may not apply precisely as described to the respective application, and which my change due to further product enhancements. The technical data, illustrations and other information about our products are the mere results of individual technical testing. These descriptions and other product features are only binding if they expressly agreed upon at the time of the conclusion of a binding contract. In all other cases, we reserve the right to make technical changes as well as changes of availability. Pictures and other graphic illustrations are approximations only. All product names may be trademarks or brand names of the RAFI Group or any other sub-supplier of RAFI. The use of such by any third parties for their own purposes may infringe the rights of the respective entity holding those rights.

RAFI GmbH & Co. KG

Ravensburger Str. 128-134
88276 Berg / Ravensburg
Germany
www.rafi-group.com,
info.headquarters@rafi-group.com

1.22.114.392/0200

Schaltschema-Zeichnung

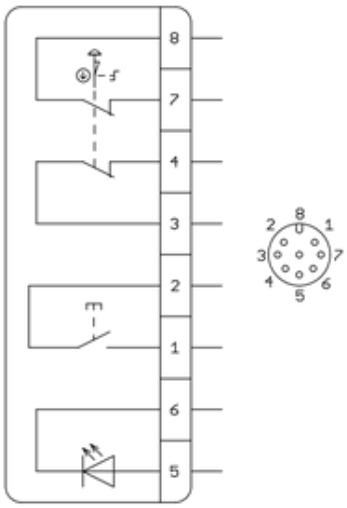

The information in this data sheet only contains general descriptions and / or performance features, which may not apply precisely as described to the respective application, and which my change due to further product enhancements. The technical data, illustrations and other information about our products are the mere results of individual technical testing. These descriptions and other product features are only binding if they expressly agreed upon at the time of the conclusion of a binding contract. In all other cases, we reserve the right to make technical changes as well as changes of availability. Pictures and other graphic illustrations are approximations only. All product names may be trademarks or brand names of the RAFI Group or any other sub-supplier of RAFI. The use of such by any third parties for their own purposes may infringe the rights of the respective entity holding those rights.

RAFI GmbH & Co. KG

Ravensburger Str. 128-134
88276 Berg / Ravensburg
Germany
www.rafi-group.com,
info.headquarters@rafi-group.com