1.15.210.101/2201

LUMOTAST 16, Leuchtdrucktaster, Bund rund, tastend, Frontring schwarz, 1 S, Blende weiß



Haupt- / Anwendungsgebiete

- Messen-Steuern-Regeln
- Elektrotechnik
- Maschinen- und Anlagenbau
- Signalbau
- Handbediengeräte
- Industrie-Roboter
- Modellbau

Spezielle Features

- Beleuchtbar durch integrierte LED
- Option: C-LAB Variante mit auswechselbaren Schrifteinlagen
- Einbauöffnung rund, Durchmesser 16,2 mm
- Einbautiefe: 18 mm
- Anschluss: Flachstecker 2,8 x 0,5 mm
- Gold- oder Silberkontakte
- Kontakte: Standard: 1S
- max 35 V / 100 mA
- Strahlwasserschutz IP 65 und IP 67 frontseitig

Beschreibung

Die LUMOTAST 16 Leuchtdrucktaster bieten durch den Einsatz der RAFI Kurzhubtaster ein knackiges taktiles Feedback - mit deutlichem Tastenklick. Dabei überzeugt er mit vielfältigen Anwendungs- und Einsatzmöglichkeiten im industriellen Bereich.

Technische Daten

Allgemein

Farbe der Blende	weiß
Eigenschaft der Blende / des Pilzes	transluzent
Farbe des Bundes	schwarz
Farbe des Frontringes	schwarz
Farbe des Leuchtmittels	weiß
Form des Bundes	rund
Arbeitstemperatur, min.	-25 °C
Arbeitstemperatur, max.	70 °C
Lagertemperatur, min.	-40 °C
Lagertemperatur, max.	80 °C
beleuchtbar	ja
Verpackung	Karton
Verpackungseinheit	10 Stück
Nettogewicht	4,2 g
Lebensdauer	500.000 Zyklen
B10	600.000 Zyklen
Schutzart frontseitig gem. DIN EN 60529	IP65 IP67

Direkte Links

- RAFI eCatalog

The information in this data sheet only contains general descriptions and / or performance features, which may not apply precisely as described to the respective application, and which my change due to further product enhancements. The technical data, illustrations and other information about our products are the mere results of individual technical testing. These descriptions and other product features are only binding if they expressly agreed upon at the time of the conclusion of a binding contract. In all other cases, we reserve the right to make technical changes as well as changes of availability. Pictures and other graphic illustrations are approximations only. All product names may be trademarks or brand names of the RAFI Group or any other sub-supplier of RAFI. The use of such by any third parties for their own purposes may infringe the rights of the respective entity holding those rights.

RAFI GmbH & Co. KG

Ravensburger Str. 128-134
88276 Berg / Ravensburg
Germany
www.rafi-group.com,
info.headquarters@rafi-group.com

UL Enclosure Type Rating frontseitig	type 1
Vibrationsfestigkeit nach Norm IEC 60068-2-6	5 g bei 10 - 500 Hz
MOQ Auftrag	50 Stück
RoHS konform	ja
REACH konform	ja

Einbaumaße

Außenmaß Länge	23,5 mm
Außenmaß Breite	23,5 mm
Außenmaß Höhe	22,3 mm
Einbauöffnung	16,2 mm
Einbautiefe	18 mm
Einbauhöhe	4,6 mm
Maß des Bundes	23,5 mm

Mechanische Kennwerte

Betätigungsfunktion	tastend
Kontaktfunktion	1 S
Kontaktsystem	Sprungkontakt
Kontaktwerkstoff	Gold
Befestigung	Gewindering
Lötbarkeit	Nein
Drehmoment Gewindering, max.	0,8 Nm
Anschluss rückseitig	Flachsteckanschluss 2,8 x 0,5

Elektrische Kennwerte

Bemessungsisolationsspannung	42 V
Betriebsspannung des Leuchtmittel, min.	10 V
Betriebsspannung des Leuchtmittel, max.	32 V
Schaltspannung, min.	0,02 V
Schaltspannung, max.	35 V
Schaltspannung, max. gem. UL 60947	30 V AC (42,2 V peak)
Betriebsstrom des Leuchtmittel, min.	18 mA
Betriebsstrom des Leuchtmittel, max.	25 mA
Schaltstrom, min.	0,0001 A
Schaltstrom, max.	0,1 A
Schaltleistung, max.	1 W

The information in this data sheet only contains general descriptions and / or performance features, which may not apply precisely as described to the respective application, and which my change due to further product enhancements. The technical data, illustrations and other information about our products are the mere results of individual technical testing. These descriptions and other product features are only binding if they expressly agreed upon at the time of the conclusion of a binding contract. In all other cases, we reserve the right to make technical changes as well as changes of availability. Pictures and other graphic illustrations are approximations only. All product names may be trademarks or brand names of the RAFI Group or any other sub-supplier of RAFI. The use of such by any third parties for their own purposes may infringe the rights of the respective entity holding those rights.

RAFI GmbH & Co. KG

Ravensburger Str. 128-134
88276 Berg / Ravensburg
Germany
www.rafi-group.com,
info.headquarters@rafi-group.com

Zeichnungen

Maß-Zeichnungen

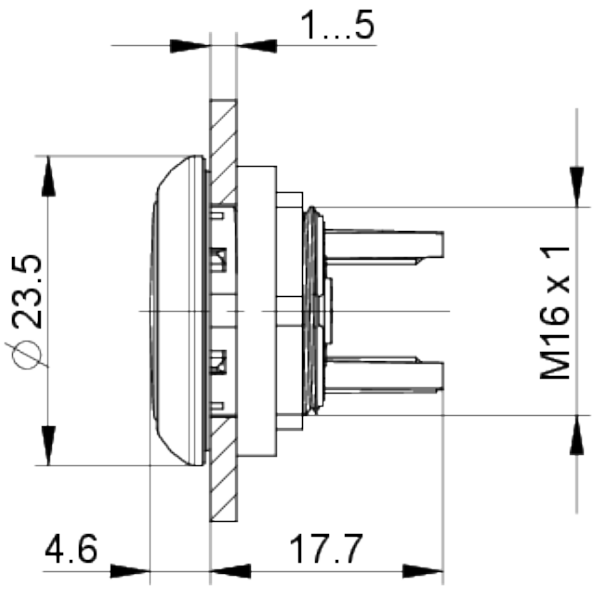

Einbauöffnung-Zeichnungen

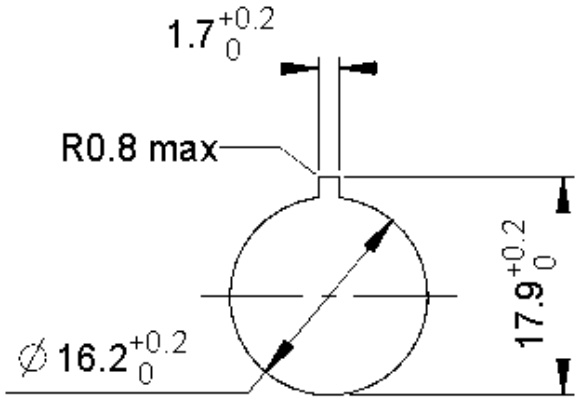

The information in this data sheet only contains general descriptions and / or performance features, which may not apply precisely as described to the respective application, and which my change due to further product enhancements. The technical data, illustrations and other information about our products are the mere results of individual technical testing. These descriptions and other product features are only binding if they expressly agreed upon at the time of the conclusion of a binding contract. In all other cases, we reserve the right to make technical changes as well as changes of availability. Pictures and other graphic illustrations are approximations only. All product names may be trademarks or brand names of the RAFI Group or any other sub-supplier of RAFI. The use of such by any third parties for their own purposes may infringe the rights of the respective entity holding those rights.

RAFI GmbH & Co. KG

Ravensburger Str. 128-134
88276 Berg / Ravensburg
Germany
www.rafi-group.com,
info.headquarters@rafi-group.com

Schaltschema-Zeichnung

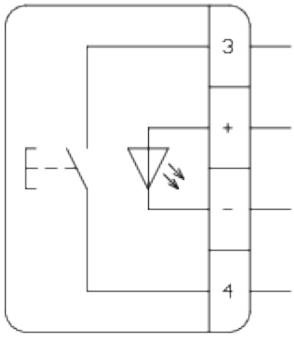

The information in this data sheet only contains general descriptions and / or performance features, which may not apply precisely as described to the respective application, and which my change due to further product enhancements. The technical data, illustrations and other information about our products are the mere results of individual technical testing. These descriptions and other product features are only binding if they expressly agreed upon at the time of the conclusion of a binding contract. In all other cases, we reserve the right to make technical changes as well as changes of availability. Pictures and other graphic illustrations are approximations only. All product names may be trademarks or brand names of the RAFI Group or any other sub-supplier of RAFI. The use of such by any third parties for their own purposes may infringe the rights of the respective entity holding those rights.

RAFI GmbH & Co. KG

Ravensburger Str. 128-134
88276 Berg / Ravensburg
Germany
www.rafi-group.com,
info.headquarters@rafi-group.com