Mini 1511.2

Lautsprecher und Schallkapsel

Datenblatt
Stand: 09/2026

Importeur

Name und Anschrift	Tams Elektronik GmbH Fuhrberger Str. 4 | 30625 Hannover | Deutschland
Artikel-Nr. des Importeurs	70-03035-01
Lieferumfang	1 Lautsprecher, 1 Schallkapsel

Technische Daten

Abmessungen netto	15 x 11 x 3 mm (± 0,2 mm)
Abmessungen mit Schallkapsel	15 x 11 x 6,5 mm (± 0,2 mm)
Nenn-Belastbarkeit	0,7 W
maximale Belastbarkeit	1,0 W
Nennimpedanz	7,2 Ohm (± 10%)
Übertragungsbereich (-10 dB)	450–20.000°Hz
Mittlerer Schalldruckpegel	81 ± 3 dB (1°W/1°m)
Resonanzfrequenz fs	800 Hz (± 20%)
Länge des Anschlusskabels	---
Gewicht netto	1,7 g
Gewicht mit Schallkapsel	2,0 g
Material Schallkapsel	PLA (Polylactid)

Hersteller des Lautsprechers

Name und Anschrift	Shenzhen Kaiboer Electronic Technology Co., Limited | China
Bezeichnung des Herstellers	1511 Speaker
Artikel-Nr. des Herstellers	KBE151108S3.3HT

tams elektronik

SPECIFICATION

SHEET FOR APPROVAL

Customer：

Nomenclature： **1511 SPEAKER**

Item No.：

Your Part No.：

Our Part No.： **KBE151108S3.3HT**

Version： **V1.0**

Date： **2019.09.10**

CUSTOMER 客户	APPROVER 审批	CHECKER 制作

深圳市凯博尔电子科技有限公司

深圳市宝安区西乡黄田荔园工业区综合楼 3 楼

Tel:+86-0755-2733 3691 Web: www.szkber.com
Fax:+86-0755-2733 3690 Email: szkber@126.com

KAIBOER 深圳市凯博尔电子科技有限公司	SPECIFICATIONS		ITEM NO.	1/7
	MODEL NO.	KBE151108S3.3HT	SPEC. No	19091001

1	产品概要/PRODUCT OUTLINE	
	1-1 适用范围/SCOPE	This specification is applied to mobile telephone
	1-2 尺寸/DIMENSIONS	As shown in fig (3)
	1-3 大小/SIZE	（L）15.0×（W）11.0×（H）3.0(±0.2 mm)
	1-4 重量/NET WEIGHT	APPROX. 1.75g
	1-5 线圈/1COIL	超高张力线
2	标准试验状态 Standard Test Condition	一般规格试验状态（特殊要求除外） 常温 15～35℃，常湿 45%～85%，气压 860～1060hPa 但判定上有疑问时，试验状态为： 温度 20±2℃，相对湿度 60%～70%，气压 860～1060hPa
		The test conditions unless otherwise specified should be Normal temperature 15 to 35℃,Normal humidity 45 to 85% And normal atmospheric pressure 860 to 1060hPa However,if there arises a doubt in judgement,the test conditions shall be as follows: Temperature 20±2℃ Humidity 60%～70% Atmosphere 860～1060hPa

tams elektronik

PREPARED	CHECKED	APPROVED
Liu	Wang	Li

3	电气规格/ELECTRICAL SPECIFICATIONS	
	3-1 输出音压位准 SOUND PRESSURE LEVEL	81±3dB SPL /2.0Vrms/10cm at (AVG 0.8,1.0,1.5 2.0) KHz in 1cc box
	3-2 阻抗 IMPEDANCE	DCR: 7.2±10% Ω /ACR: 8±15% Ω /2.0KHz/2.0Vrms
	3-3 频宽回应 FREQUENCY RESPONSE	As shown in fig(2)
	3-4 额定输入功率 Rate Input Power	0.7W In 1cc Box
	3-5 最大输入功率 Max Input Power	1.0W In 1cc Box For 1 Minute
	3-6 异常音测试 Buzzes & Rattles	Must be free audible noise (In 1cc Box) (From 300 Hz to 3.4KHz frequency range,Input:2.37V)
	3-7 最低共振频率 LOWEST RESONANCE FREQUENCY	800±20% Hz in free air at 1.0Vrms/10cm. 1100±20% Hz while testing in 1cc box at 2.0Vrms/10cm
	3-8 有效频宽 FREQUENCY RANGE	F0～20KHz
	3-9 失真 TOTAL HARMONIC DISTORTION	15%MAX. at 800~1200Hz, 2.0rms/10cm 10% MAX. at 1201~5KHz, 2.0rms/10cm
	3-10 工作温度 OPERATING TEMPERATURE	-30℃ to +70℃
	3-11 贮存温度 STORE TEMPERATURE	-30℃ to +85℃

tams elektronik

PREPARED	CHECKED	APPROVED
Liu	*Wang*	*Li*

4	信赖性试验/RELIABLE TEST	
	4-1 概述 GENERAL	After any following tests the response at 1 K Hz shall not deviate more than 3 dB from the initial value
	4-2 负载试验 LOAD TEST	输入电压 / Input Power : 2.37V 输入信号 / Input Signal : white noise (In 1cc Box) 时 间 / Duration : 96 hours 试验后放置时间 / Duration of Recovery : 4hrs of conditions at 20℃
	4-3 湿度试验 HUMIDITY TEST	温 度 / Temperature : +40℃±3℃ 相对湿度 / Relative Humidity : 90%~95% R.H. 时 间 / Duration : 96 hours 试验后放置时间 / Duration of Recovery : 4hrs of conditions at 20℃
	4-4 低温试验 LOW TEMPERATURE TEST	温 度 / Temperature : -30℃±3℃ 时 间 / Duration : 96 hours 试验后放置时间 / Duration of Recovery : 4hrs of conditions at 20℃
	4-5 高温试验 HIGH TEMPERATURE TEST	温 度 / Temperature : +85℃±3℃ 时 间 / Duration : 96 hours 试验后放置时间 / Duration of Recovery : 4hrs of conditions at 20℃
	4-6 温度循环试验 TEMPERATURE CYCLES TEST	TEMPERTURE: 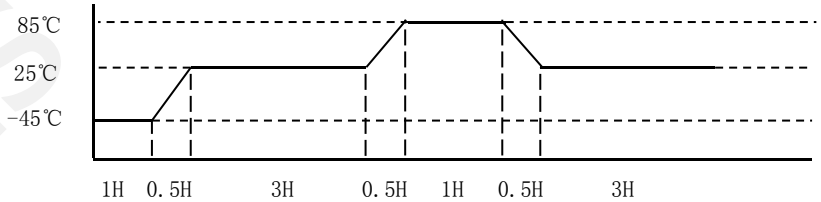 循环次数 / Cycles : 10 Cycles 试验后放置时间 / Duration of Recovery : 4hrs of conditions at 20℃
	4-7 落地试验 TEST DROP TEST	落下方向 / Direction : 1 corner,3 sides,6 faces 落下回数 / Times : Once in each directions 高 度 / Height : From 0.7m(on the concrete) 试验后放置时间 / Duration of Recovery : 4hours of conditions at 20℃ 依包装实体一角三棱六面作自由落体试验后,实体外观需正常
	4-8 振动试验 VIBRATION TEST	振 动 / Vibration : 10-55Hz (In 1cc Box) 振 幅 / Amplitude : 1.5mm 时 间 / Times : 1 hour in each of 3axes 试验后放置时间 / Duration of Recovery : 4hrs of conditions at 20℃

PREPARED	CHECKED	APPROVED
Liu	*Wang*	*Li*

tams elektronik

5

ELECTRICAL AND ACOUSTICAL MEASURING CONDITION (fig.1)

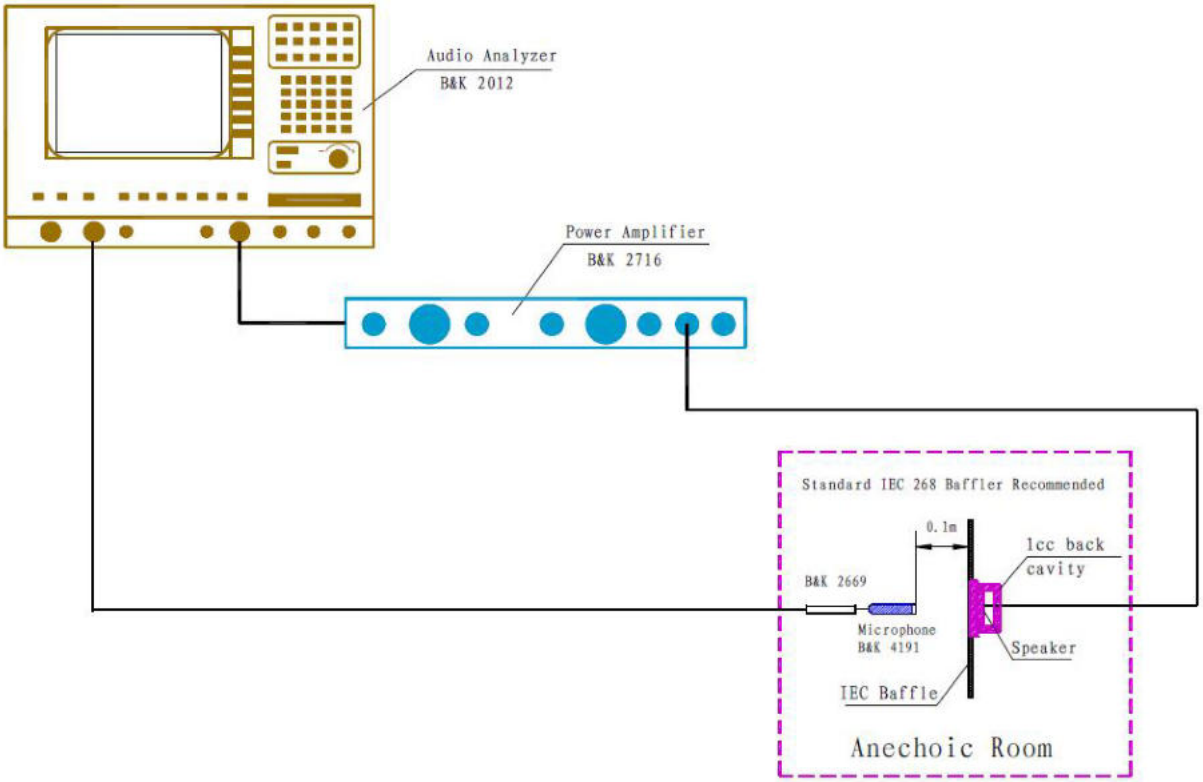

Fig.1 Illustration of measuring diagr.am (speaker mode)

Efficiency

Source Impedance Zs=0 Ohms

Open-Circuit Level 0.1W/10cm

PREPARED	CHECKED	APPROVED
Liu	*Wang*	*Li*

6

FREQUENCY RESPONSE (fig.2)

MYLAR SPEAKER

EFFICIENCY 81±3dB (0dB=20.0μPa)at S.P.L
测试条件:2.37Vrms/10cm in 1cc BOX

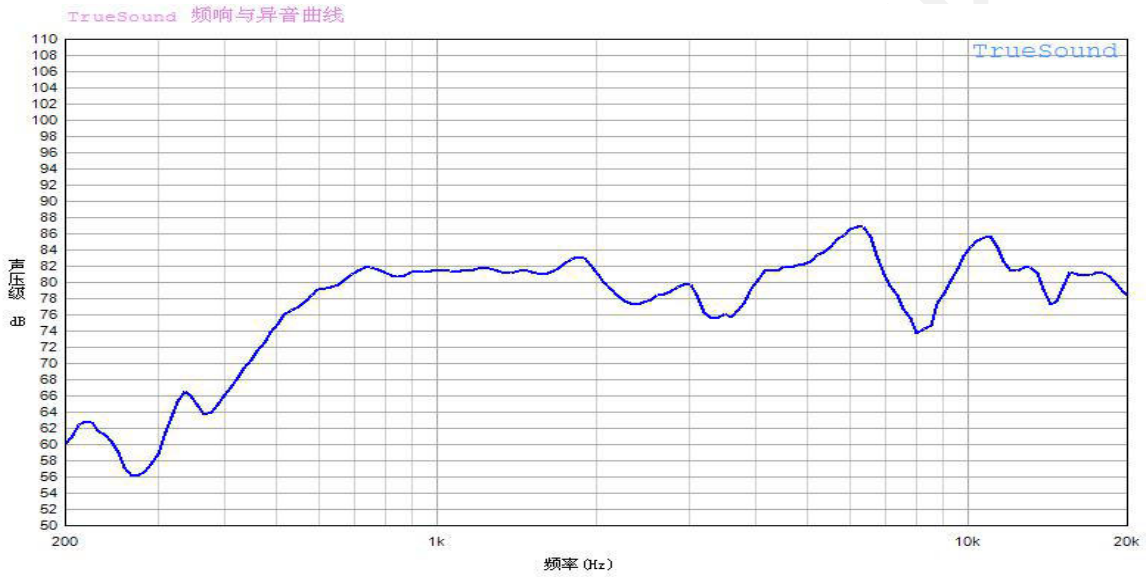

Efficiency
Source Impedance Zs=0 Ohms

PREPARED	CHECKED	APPROVED
Liu	*Wang*	*Li*

7

DIMENSIONS（fig.3）

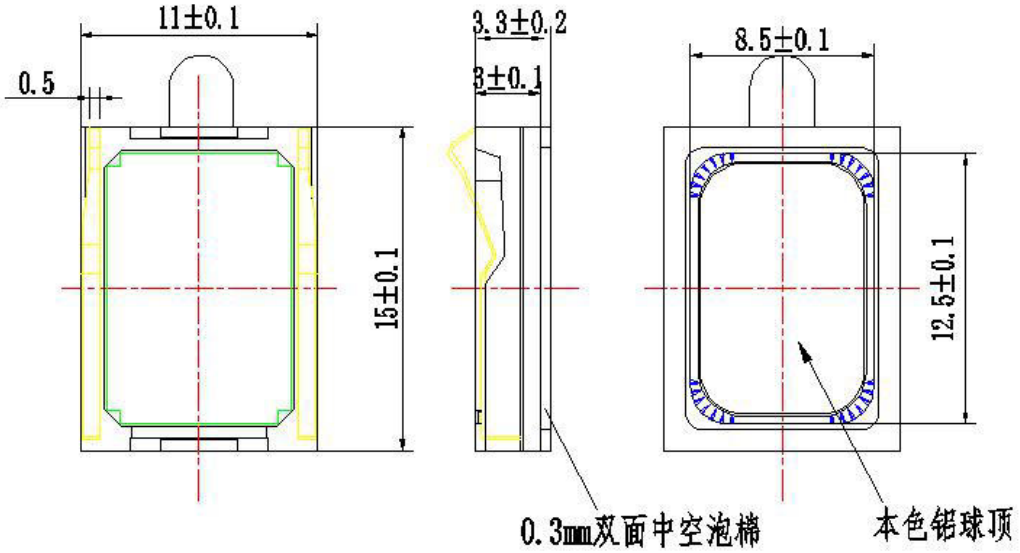

Bill of Material

8	Cover	PC	1	ROHS
7	Polarity Plate	Fe	1	ROHS
6	Magnet	Nd-Fe-B	1	ROHS
5	PIN	Cu+Au	1	ROHS
4	Voice coil	CU	1	ROHS
3	Yoke	Fe	1	ROHS
2	Cone	peek	1	ROHS
1	Frame	PBT	1	ROHS
ITEM	**DESCRIPTIONS**	**REMARK**	**QTY**	**REMARK**

PREPARED	CHECKED	APPROVED
Liu	*Wang*	*Li*

KAIBOER 深圳市凯博尔电子科技有限公司	SPECIFICATIONS		ITEM NO.	7/7
	MODEL NO.	KBE151108S3.3HT	SPEC. No	19091001

PRODUCT PACKAGE（fig.4）

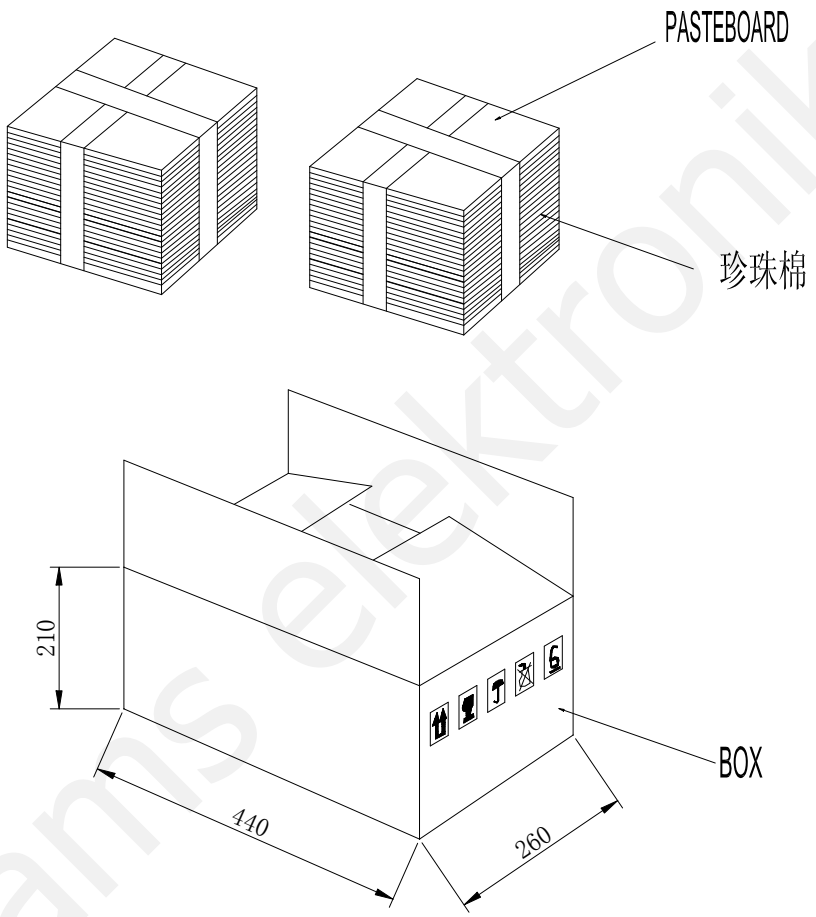

UNIT:MM

NOTES:

1. 100 PCS PER TRAY PE PAN.
2. 2000 PCS PER CARTONS.
3. 2 CARTONS PER BOX.
4. 2000 PCS PER BOX.

tams elektronik

PREPARED	CHECKED	APPROVED
Liu	Wang	Li