RoHS compliant

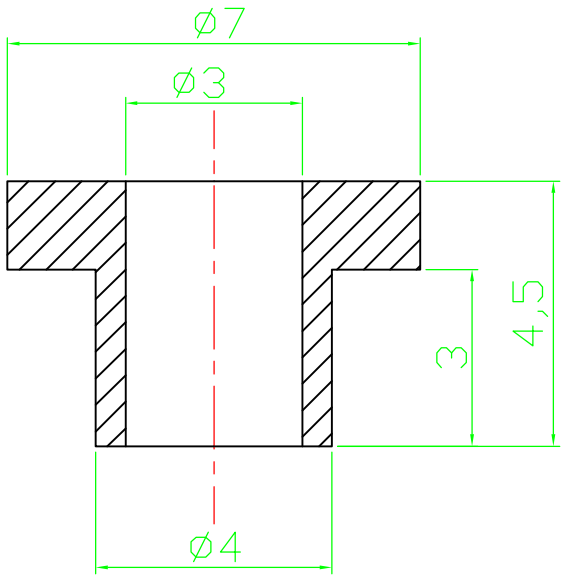

Notes
Material:SR25
Dielectric strength: 380kV/cm
Heat resistance:215°C
Tensile strength: 80N/mm

Scale	1:1						Date	Name
TOLERANCE						Drawn	20.08.2009	Dean
X.	±X					Approved	10.03.2010	Andy
X.X	±X							
X.XX	±X							
DIM	TOL	②	Modify drawing layout	10.03.2010	Dean			
X.°	±X°							
X.X°	±X°	①	Drawn	20.08.2009	Dean			
Angle	TOL	Id.	Modification	Date	Name			

ASSMANN WSW components

Customer-No.
Conrad P/N :183908

ASSMANN WSW-No.
V5815

Drawing-No.
ASS 0900 HS

rev02

Replace

Sheet