Printed-circuit board connector - SPC 5/ 2-ST-7,62 - 1996016

Please be informed that the data shown in this PDF Document is generated from our Online Catalog. Please find the complete data in the user's documentation. Our General Terms of Use for Downloads are valid (http://download.phoenixcontact.com)



The figure shows a 5-pos. version of the product

Plug component, Nominal current: 41 A, Rated voltage (III/2): 1000 V, Number of positions: 2, Pitch: 7.62 mm, Connection method: Spring-cage conn., Color: green, Contact surface: Tin

Product Features

- Fast connection technology thanks to tool-free direct plug-in principle
- Automatic, tool-free snap-lock mechanism using the Click and Lock system (-STCL); high level of safety even in the event of vibrations
- Unlimited 600 V UL approval
- Maximum contact reliability due to integrated double steel spring
- Push-in spring-cage plug with a current carrying capacity of 41 A
- CP-PC RD coding profile

Key commercial data

package_quantity	50
GTIN	4046356037754

Technical data

Dimensions

Pitch	7.62 mm
Dimension a	7.62 mm

General

Range of articles	SPC 5/..-ST
Insulating material group	I
Rated surge voltage (III/3)	8 kV
Rated surge voltage (III/2)	8 kV
Rated surge voltage (II/2)	6 kV
Rated voltage (III/3)	1000 V
Rated voltage (III/2)	1000 V
Rated voltage (II/2)	1000 V
Connection in acc. with standard	EN-VDE
Nominal current I_N	41 A
Nominal cross section	6 mm²
Maximum load current	41 A

Printed-circuit board connector - SPC 5/ 2-ST-7,62 - 1996016

Technical data

General

Insulating material	PA
Inflammability class according to UL 94	V0
Stripping length	15 mm
Number of positions	2

Connection data

Conductor cross section solid min.	0.2 mm²
Conductor cross section solid max.	10 mm²
Conductor cross section stranded min.	0.2 mm²
Conductor cross section stranded max.	6 mm²
Conductor cross section stranded, with ferrule without plastic sleeve min.	0.25 mm²
Conductor cross section stranded, with ferrule without plastic sleeve max.	6 mm²
Conductor cross section stranded, with ferrule with plastic sleeve min.	0.25 mm²
Conductor cross section stranded, with ferrule with plastic sleeve max.	4 mm²
Conductor cross section AWG/kcmil min.	24
Conductor cross section AWG/kcmil max	8
2 conductors with same cross section, stranded, TWIN ferrules with plastic sleeve, min.	0.25 mm²
2 conductors with same cross section, stranded, TWIN ferrules with plastic sleeve, max.	1.5 mm²
Minimum AWG according to UL/CUL	24
Maximum AWG according to UL/CUL	8

classifications

eCl@ss

eCl@ss 4.0	272607xx
eCl@ss 4.1	27260701
eCl@ss 5.0	27260701
eCl@ss 5.1	27260701
eCl@ss 6.0	27260704
eCl@ss 7.0	27440402
eCl@ss 8.0	27440402

ETIM

ETIM 3.0	EC001121
ETIM 4.0	EC002638
ETIM 5.0	EC002638

UNSPSC

UNSPSC 6.01	30211810

Printed-circuit board connector - SPC 5/ 2-ST-7,62 - 1996016

classifications

UNSPSC

UNSPSC 7.0901	39121409
UNSPSC 11	39121409
UNSPSC 12.01	39121409
UNSPSC 13.2	39121409

approvals

UL Recognized / cUL Recognized / GOST / cULus Recognized /

Approval details

UL Recognized

Usegroups	B	C
Nominal voltage UN	600 V	600 V
Nominal current IN	35 A	35 A
mm²/AWG/kcmil	24-8	24-8

cUL Recognized

Usegroups	B	C
Nominal voltage UN	600 V	600 V
Nominal current IN	35 A	35 A
mm²/AWG/kcmil	24-8	24-8

GOST

cULus Recognized

Drawings

Printed-circuit board connector - SPC 5/ 2-ST-7,62 - 1996016

Diagram

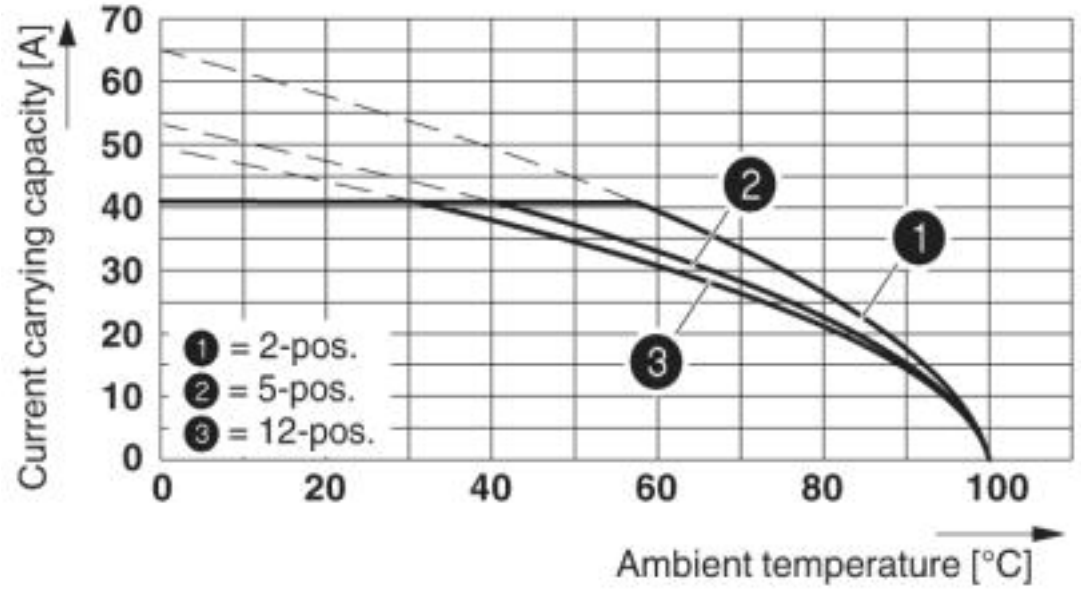

Derating curve for: SPC 5/...-ST-7,62 with PC 5/...-G-7,62

Diagram

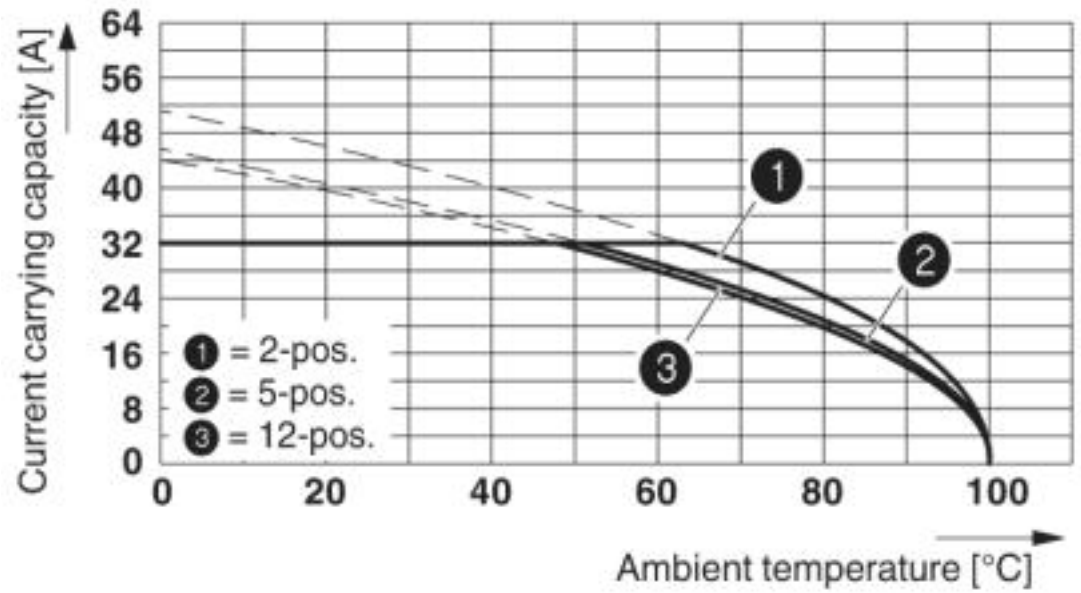

Derating curve for: SPC 5/...-ST-7,62 with PC 5/...-G-7,62Conductor cross section: 6 mm²

Printed-circuit board connector - SPC 5/ 2-ST-7,62 - 1996016

Dimensioned drawing

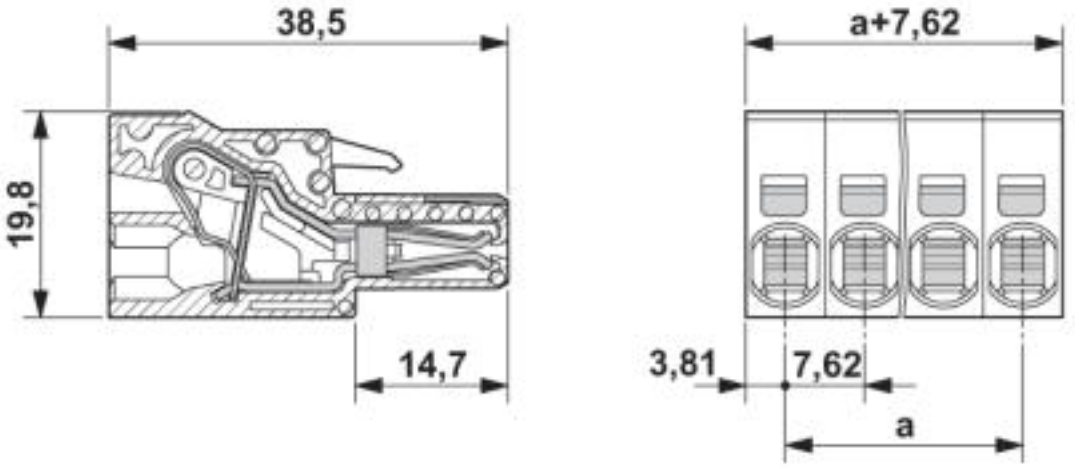

© Phoenix Contact 2013 - all rights reserved
http://www.phoenixcontact.com