PCB terminal block - SPT 5/ 3-V-7,5-ZB - 1719325

Please be informed that the data shown in this PDF Document is generated from our Online Catalog. Please find the complete data in the user's documentation. Our General Terms of Use for Downloads are valid (http://download.phoenixcontact.com)



The figure shows a 5-pos. version of the product

PCB terminal block, Nominal current: 41 A, Nom. voltage: 1000 V, Pitch: 7.5 mm, Number of positions: 3, Connection method: Spring-cage conn., Mounting: Soldering, Conductor/PCB connection direction: 90 °, Color: green

Product Features

- Fast connection technology thanks to tool-free direct plug-in principle
- Conductor connection direction: vertical (90° -V) to the PCB
- Unlimited 600 V UL approval thanks to compact zigzag pinning
- SPT 5 Push-in spring-cage PCB terminal blocks for conductor cross sections up to 6 mm², stranded
- Single-position terminal block bases with double pin

Key commercial data

package_quantity	50
GTIN	4046356141420

Technical data

Dimensions

Pitch	7.5 mm
Dimension a	15 mm
Pin dimensions	1,7 x 0,8
Pin spacing	7.5 mm
Hole diameter	2.1 mm

General

Range of articles	SPT 5/..-V
Insulating material group	I
Rated surge voltage (III/3)	8 kV
Rated surge voltage (III/2)	8 kV
Rated surge voltage (II/2)	6 kV
Rated voltage (III/3)	800 V
Rated voltage (III/2)	1000 V
Rated voltage (II/2)	1000 V
Connection in acc. with standard	EN-VDE
Nominal current I_N	41 A
Nominal cross section	6 mm²

PCB terminal block - SPT 5/ 3-V-7,5-ZB - 1719325

Technical data

General

Maximum load current	41 A
Insulating material	PA
Solder pin surface	Sn
Inflammability class according to UL 94	V0
Stripping length	15 mm
Number of positions	3

Connection data

Conductor cross section solid min.	0.2 mm²
Conductor cross section solid max.	10 mm²
Conductor cross section stranded min.	0.2 mm²
Conductor cross section stranded max.	6 mm²
Conductor cross section stranded, with ferrule without plastic sleeve min.	0.25 mm²
Conductor cross section stranded, with ferrule without plastic sleeve max.	6 mm²
Conductor cross section stranded, with ferrule with plastic sleeve min.	0.25 mm²
Conductor cross section stranded, with ferrule with plastic sleeve max.	4 mm²
Conductor cross section AWG/kcmil min.	24
Conductor cross section AWG/kcmil max	8
2 conductors with same cross section, stranded, TWIN ferrules with plastic sleeve, min.	0.25 mm²
2 conductors with same cross section, stranded, TWIN ferrules with plastic sleeve, max.	1.5 mm²
Minimum AWG according to UL/CUL	24
Maximum AWG according to UL/CUL	8

classifications

eCl@ss

eCl@ss 4.0	27141109
eCl@ss 4.1	27141109
eCl@ss 5.0	27141190
eCl@ss 5.1	27141190
eCl@ss 6.0	27261101
eCl@ss 7.0	27440401
eCl@ss 8.0	27440401

ETIM

ETIM 3.0	EC001121
ETIM 4.0	EC002643
ETIM 5.0	EC002643

PCB terminal block - SPT 5/ 3-V-7,5-ZB - 1719325

classifications

UNSPSC

UNSPSC 6.01	30211801
UNSPSC 7.0901	39121432
UNSPSC 11	39121432
UNSPSC 12.01	39121432
UNSPSC 13.2	39121432

approvals

UL Recognized / SEV / cUL Recognized / CCA / IECEE CB Scheme / GOST / UL Recognized / cUL Recognized / GOST / cULus Recognized /

Approval details

UL Recognized

Usegroups	**B**	**C**
Nominal voltage UN	600 V	600 V
Nominal current IN	36 A	36 A
mm²/AWG/kcmil	24-8	24-8

SEV

Nominal voltage UN	1000 V
Nominal current IN	41 A
mm²/AWG/kcmil	6

cUL Recognized

Usegroups	**B**	**C**
Nominal voltage UN	600 V	600 V
Nominal current IN	36 A	36 A
mm²/AWG/kcmil	24-8	24-8

CCA

Nominal voltage UN	1000 V
Nominal current IN	41 A
mm²/AWG/kcmil	6

PCB terminal block - SPT 5/ 3-V-7,5-ZB - 1719325

approvals

IECEE CB Scheme

Nominal voltage UN	1000 V
Nominal current IN	41 A
mm²/AWG/kcmil	6

GOST

Usegroups	B	C
Nominal voltage UN	600 V	600 V
Nominal current IN	36 A	36 A
mm²/AWG/kcmil	24-8	24-8

Usegroups	B	C
Nominal voltage UN	600 V	600 V
Nominal current IN	36 A	36 A
mm²/AWG/kcmil	24-8	24-8

cULus Recognized

Drawings

PCB terminal block - SPT 5/ 3-V-7,5-ZB - 1719325

Drilling diagram

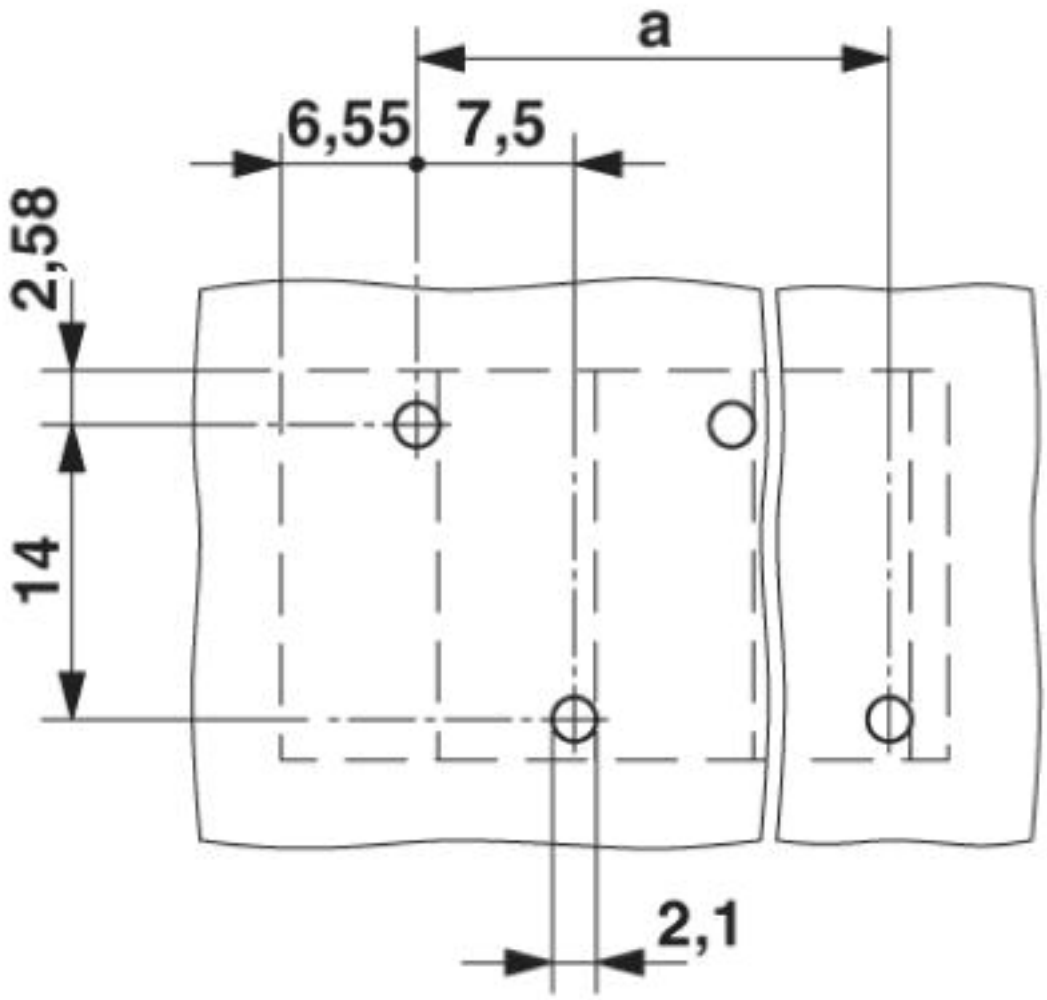

PCB terminal block - SPT 5/ 3-V-7,5-ZB - 1719325

Diagram

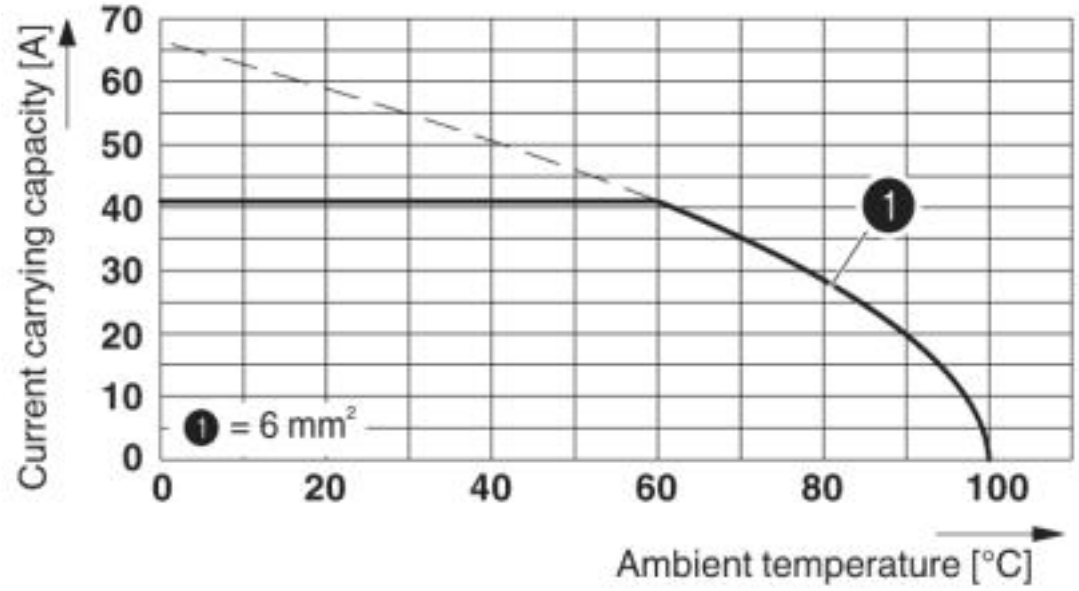

Type: SPT 5/...-V-7,5-ZBTest based on DIN EN 60512-5-2:2003-01Reduction factor = 1

Dimensioned drawing

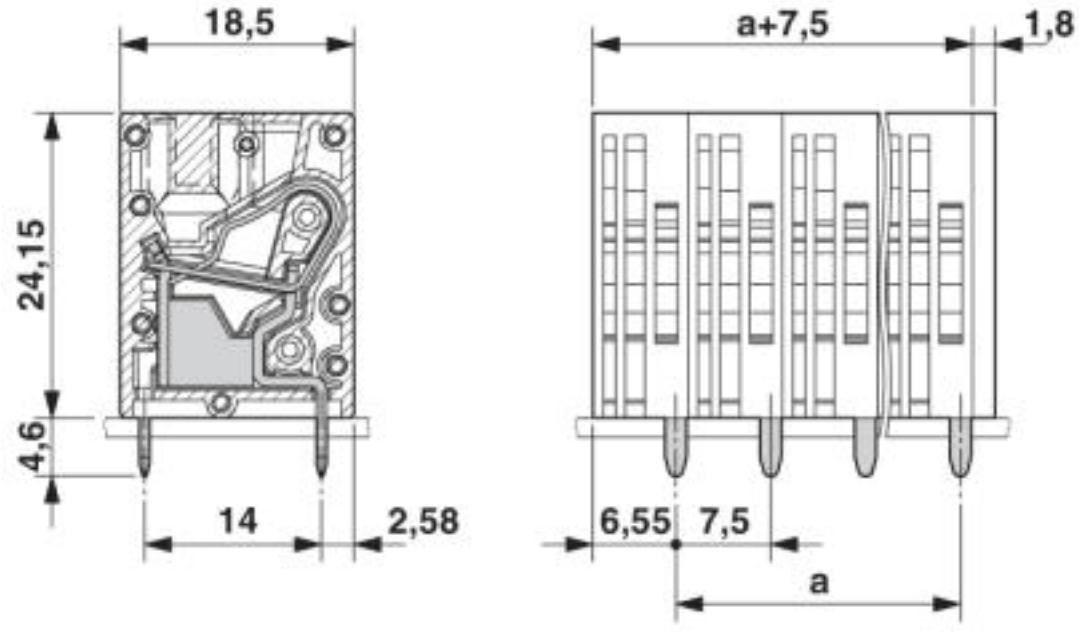

© Phoenix Contact 2013 - all rights reserved
http://www.phoenixcontact.com