# Printed-circuit board connector - FKIC 2,5 HC/ 2-ST-5,08 - 1942594

Please be informed that the data shown in this PDF Document is generated from our Online Catalog. Please find the complete data in the user's documentation. Our General Terms of Use for Downloads are valid (http://download.phoenixcontact.com)



The figure shows a 10-position version of the product

Plug component, Nominal current: 16 A, Rated voltage (III/2): 320 V, Number of positions: 2, Pitch: 5.08 mm, Connection method: Spring-cage conn., Color: green, Contact surface: Tin, COMBICON connectors may only be activated under no load conditions. If for operating reasons small loads must be switched, experimental values are available upon request.

## Product Features

- Two integrated test connections
- HC plugs may only be used with HC base strips
- Coding profiles (CP) as protection against mismatching
- Inverted versions with pin contact (FKIC 2,5 HC); e.g., for cable/cable connections or motor outputs
- Push-in spring-cage plug as a "High Current" (HC) version for 16 A

## Key commercial data

| | |
|---|---|
| **package_quantity** | 50 |
| **GTIN** | 4017918879112 |

## Technical data

### Dimensions

| | |
|---|---|
| **Pitch** | 5.08 mm |
| **Dimension a** | 5.08 mm |

### General

| | |
|---|---|
| **Range of articles** | FKIC 2,5 HC/..-ST |
| **Insulating material group** | I |
| **Rated surge voltage (III/3)** | 4 kV |
| **Rated surge voltage (III/2)** | 4 kV |
| **Rated surge voltage (II/2)** | 4 kV |
| **Rated voltage (III/3)** | 320 V |
| **Rated voltage (III/2)** | 320 V |
| **Rated voltage (II/2)** | 630 V |
| **Connection in acc. with standard** | EN-VDE |
| **Nominal current $I_N$** | 16 A |
| **Nominal cross section** | 2.5 mm² |
| **Maximum load current** | 16 A (with 2.5 mm² conductor cross section) |
| **Insulating material** | PA |
| **Inflammability class according to UL 94** | V0 |

# Printed-circuit board connector - FKIC 2,5 HC/ 2-ST-5,08 - 1942594

## Technical data

### General

| | |
|---|---|
| **Internal cylindrical gage** | A2 |
| **Stripping length** | 10 mm |
| **Number of positions** | 2 |

### Connection data

| | |
|---|---|
| **Conductor cross section solid min.** | 0.2 mm² |
| **Conductor cross section solid max.** | 2.5 mm² |
| **Conductor cross section stranded min.** | 0.2 mm² |
| **Conductor cross section stranded max.** | 2.5 mm² |
| **Conductor cross section stranded, with ferrule without plastic sleeve min.** | 0.25 mm² |
| **Conductor cross section stranded, with ferrule without plastic sleeve max.** | 2.5 mm² |
| **Conductor cross section stranded, with ferrule with plastic sleeve min.** | 0.25 mm² |
| **Conductor cross section stranded, with ferrule with plastic sleeve max.** | 2.5 mm² |
| **Conductor cross section AWG/kcmil min.** | 24 |
| **Conductor cross section AWG/kcmil max** | 12 |
| **2 conductors with same cross section, stranded, TWIN ferrules with plastic sleeve, min.** | 0.5 mm² |
| **2 conductors with same cross section, stranded, TWIN ferrules with plastic sleeve, max.** | 1.5 mm² |
| **Minimum AWG according to UL/CUL** | 26 |
| **Maximum AWG according to UL/CUL** | 12 |

## classifications

### eCl@ss

| | |
|---|---|
| **eCl@ss 4.0** | 272607xx |
| **eCl@ss 4.1** | 27260701 |
| **eCl@ss 5.0** | 27260701 |
| **eCl@ss 5.1** | 27260701 |
| **eCl@ss 6.0** | 27260704 |
| **eCl@ss 7.0** | 27440402 |
| **eCl@ss 8.0** | 27440402 |

### ETIM

| | |
|---|---|
| **ETIM 3.0** | EC001121 |
| **ETIM 4.0** | EC002638 |
| **ETIM 5.0** | EC002638 |

### UNSPSC

| | |
|---|---|
| **UNSPSC 6.01** | 30211810 |
| **UNSPSC 7.0901** | 39121409 |

# Printed-circuit board connector - FKIC 2,5 HC/ 2-ST-5,08 - 1942594

## classifications

### UNSPSC

| | |
|---|---|
| **UNSPSC 11** | 39121409 |
| **UNSPSC 12.01** | 39121409 |
| **UNSPSC 13.2** | 39121409 |

## approvals

UL Recognized / VDE Gutachten mit Fertigungsüberwachung / cUL Recognized / GOST / IECEE CB Scheme / GOST / CCA / cULus Recognized /

### Approval details

**UL Recognized**

| **Usegroups** | **B** | **D** |
|---|---|---|
| Nominal voltage UN | 300 V | 300 V |
| Nominal current IN | 16 A | 10 A |
| mm²/AWG/kcmil | 26-12 | 26-12 |

**VDE Gutachten mit Fertigungsüberwachung**

| | |
|---|---|
| Nominal voltage UN | 250 V |
| Nominal current IN | 16 A |
| mm²/AWG/kcmil | 0.2-2.5 |

**cUL Recognized**

| **Usegroups** | **B** | **D** |
|---|---|---|
| Nominal voltage UN | 300 V | 300 V |
| Nominal current IN | 16 A | 10 A |
| mm²/AWG/kcmil | 26-12 | 26-12 |

**GOST**

**IECEE CB Scheme**

# Printed-circuit board connector - FKIC 2,5 HC/ 2-ST-5,08 - 1942594

## approvals

| | |
|---|---|
| Nominal voltage UN | 250 V |
| Nominal current IN | 16 A |
| mm²/AWG/kcmil | 0.2-2.5 |

| CCA | |
|---|---|
| | |
| Nominal voltage UN | 250 V |
| Nominal current IN | 16 A |
| mm²/AWG/kcmil | 0.2-2.5 |

cULus Recognized

## accessories

### Coding element

CR-MSTB - 1734401



### Test plug terminal block

MPS-MT - 0201744



### Insulating sleeve

# Printed-circuit board connector - FKIC 2,5 HC/ 2-ST-5,08 - 1942594

## accessories

MPS-IH WH - 0201663



MPS-IH RD - 0201676



MPS-IH BU - 0201689



MPS-IH GN - 0201702



MPS-IH BK - 0201731



**Screwdriver tools**

# Printed-circuit board connector - FKIC 2,5 HC/ 2-ST-5,08 - 1942594

## accessories

SZS 0,6X3,5 - 1205053



**Terminal marking**

SK 5,08/3,8:UNBEDRUCKT - 0805412



**Labeled terminal marker**

SK 5,08/3,8: 0-9 - 0804303



SK 5,08/3,8:FORTL.ZAHLEN - 0804293



**Marker pen**

B-STIFT - 1051993



# Printed-circuit board connector - FKIC 2,5 HC/ 2-ST-5,08 - 1942594

## accessories

STZ 4-FKC-5,08 - 1876877



STZ 8-FKC-5,08 - 1876880

SK 5,08/3,8:SO - 0805085



## Drawings

Diagram

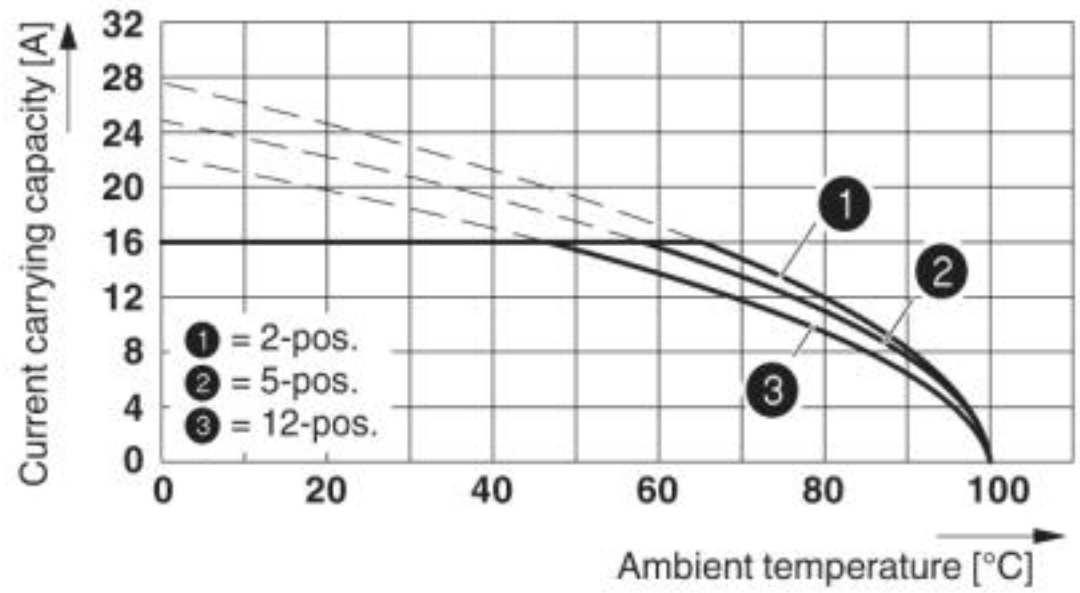


Derating curve for: FKIC 2,5 HC/..-ST- 5,08 with IC 2,5 HC/..-G- 5,08

# Printed-circuit board connector - FKIC 2,5 HC/ 2-ST-5,08 - 1942594

Dimensioned drawing

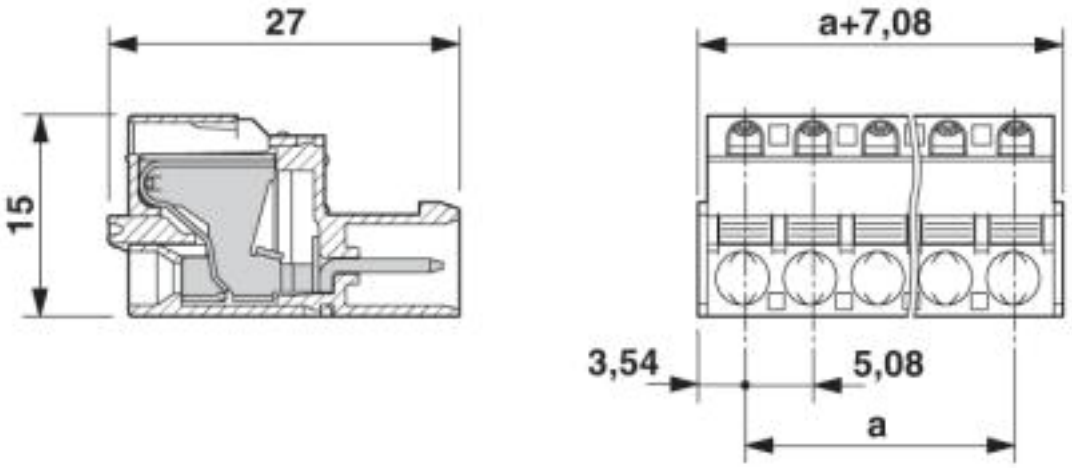


© Phoenix Contact 2013 - all rights reserved
http://www.phoenixcontact.com