Housing - PCV 5/ 2-G-7,62 - 1720576

Please be informed that the data shown in this PDF Document is generated from our Online Catalog. Please find the complete data in the user's documentation. Our General Terms of Use for Downloads are valid (http://download.phoenixcontact.com)



The figure shows a 5-pos. version of the product

Header, Nominal current: 41 A, Rated voltage (III/2): 630 V, Number of positions: 2, Pitch: 7.62 mm, Color: green, Contact surface: Tin, Assembly: Soldering

Product Features

- Vertical PC 5 headers for use in combination with PC 5 plugs
- Asymmetrical arrangement of solder pins to prevent mismatching
- Vibration-resistant connection by means of threaded flange (-GF; also for screw connection in the device)
- Compatible with the Click and Lock system

Key commercial data

package_quantity	50
GTIN	4046356113908

Technical data

Dimensions

Length	14.29 mm
Pitch	7.62 mm
Dimension a	7.62 mm
Pin dimensions	0,8 x 1,0
Pin spacing	7.62 mm
Hole diameter	1.3 mm

General

Range of articles	PCV 5/..-G
Insulating material group	I
Rated surge voltage (III/3)	6 kV
Rated surge voltage (III/2)	6 kV
Rated surge voltage (II/2)	6 kV
Rated voltage (III/3)	630 V
Rated voltage (III/2)	630 V
Rated voltage (II/2)	1000 V
Connection in acc. with standard	EN-VDE
Nominal current I_N	41 A
Maximum load current	41 A

Housing - PCV 5/ 2-G-7,62 - 1720576

Technical data

General

Insulating material	PA
Inflammability class according to UL 94	V0
Color	green
Number of positions	2

classifications

eCl@ss

eCl@ss 4.0	272607xx
eCl@ss 4.1	27260701
eCl@ss 5.0	27260701
eCl@ss 5.1	27260701
eCl@ss 6.0	27260704
eCl@ss 7.0	27440402
eCl@ss 8.0	27440402

ETIM

ETIM 3.0	EC001121
ETIM 4.0	EC002637
ETIM 5.0	EC002637

UNSPSC

UNSPSC 6.01	30211810
UNSPSC 7.0901	39121409
UNSPSC 11	39121409
UNSPSC 12.01	39121409
UNSPSC 13.2	39121409

approvals

UL Recognized / cUL Recognized / GOST / GOST / cULus Recognized /

Approval details

UL Recognized

Usegroups	**B**	**C**	**D**
Nominal voltage UN	300 V	150 V	300 V
Nominal current IN	41 A	41 A	10 A
mm²/AWG/kcmil			

Housing - PCV 5/ 2-G-7,62 - 1720576

approvals

cUL Recognized

Usegroups	B	C	D
Nominal voltage UN	300 V	150 V	300 V
Nominal current IN	41 A	41 A	10 A
mm²/AWG/kcmil			

GOST

cULus Recognized

Drawings

Drilling diagram

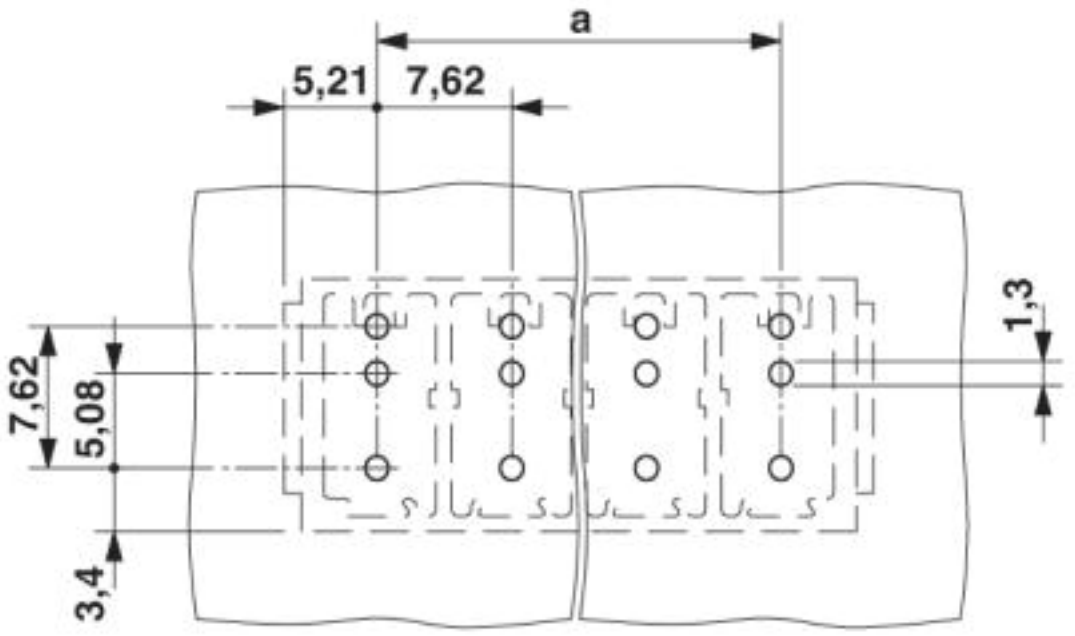

Housing - PCV 5/ 2-G-7,62 - 1720576

Dimensioned drawing

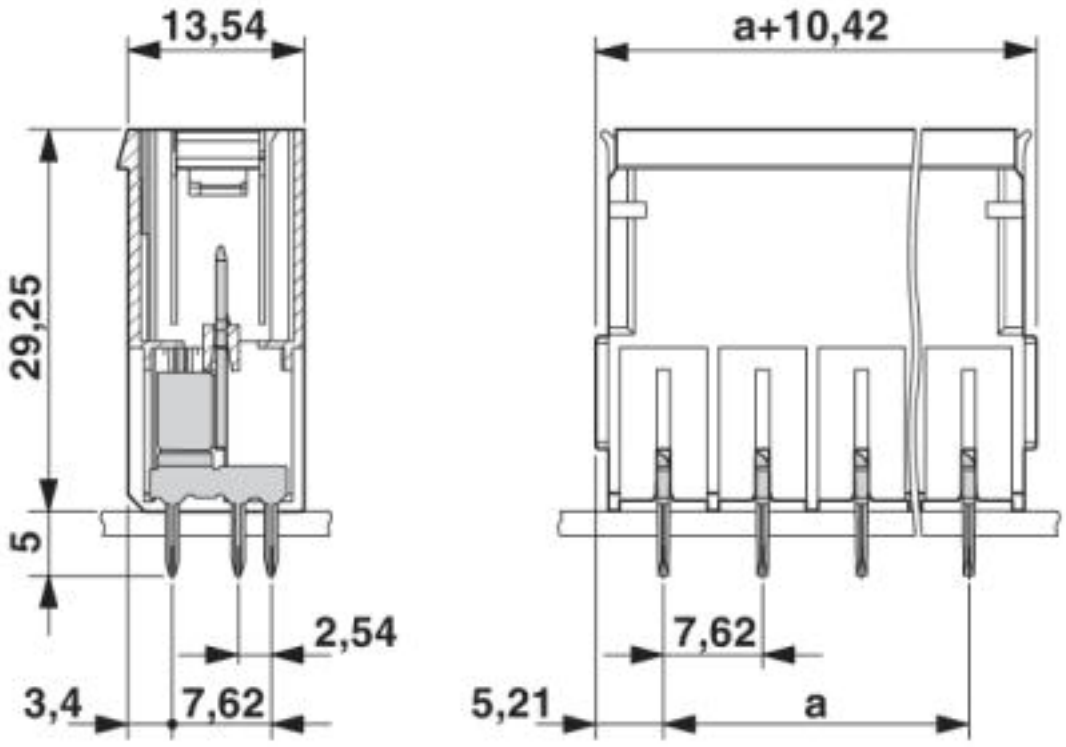

© Phoenix Contact 2013 - all rights reserved
http://www.phoenixcontact.com