PCB terminal block - ZFKDS 4-10 - 1907539

Please be informed that the data shown in this PDF Document is generated from our Online Catalog. Please find the complete data in the user's documentation. Our General Terms of Use for Downloads are valid (http://download.phoenixcontact.com)



The figure shows a 5-pos. version of the product

PCB terminal block, Nominal current: 32 A, Nom. voltage: 630 V, Pitch: 10 mm, Number of positions: 1, Connection method: Spring-cage conn., Mounting: Soldering, Conductor/PCB connection direction: 45 °, Color: green, The article can be aligned to create different nos. of positions!

Product Features

- Color coding of individual positions supported
- Fully insulated bridges (FBSK) with different numbers of positions, e.g., for potential distribution
- Integrated test connection
- Optional mounting flange (FL) for safe mounting in the device
- Pitch spacers (RZ) for voltage expansion
- PCB terminal blocks with spring-cage connection, up to 6 mm² conductor cross section

Key commercial data

package_quantity	50
GTIN	4017918193904

Technical data

Dimensions

Length	29 mm
Pitch	10 mm
Pin dimensions	1,0 x 1,4 mm
Hole diameter	1.8 mm

General

Range of articles	ZFKDS(A) 4
Insulating material group	I
Rated surge voltage (III/3)	6 kV
Rated surge voltage (III/2)	6 kV
Rated surge voltage (II/2)	6 kV
Rated voltage (III/3)	630 V
Rated voltage (III/2)	630 V
Rated voltage (II/2)	1000 V
Connection in acc. with standard	EN-VDE
Nominal current I_N	32 A
Nominal cross section	4 mm²

PCB terminal block - ZFKDS 4-10 - 1907539

Technical data

General

Maximum load current	32 A (with 4 mm² conductor cross section)
Insulating material	PA
Solder pin surface	Sn
Inflammability class according to UL 94	V0
Internal cylindrical gage	A4
Stripping length	10 mm
Number of positions	1

Connection data

Conductor cross section solid min.	0.2 mm²
Conductor cross section solid max.	6 mm²
Conductor cross section stranded min.	0.2 mm²
Conductor cross section stranded max.	4 mm²
Conductor cross section stranded, with ferrule without plastic sleeve min.	0.25 mm²
Conductor cross section stranded, with ferrule without plastic sleeve max.	4 mm²
Conductor cross section stranded, with ferrule with plastic sleeve min.	0.25 mm²
Conductor cross section stranded, with ferrule with plastic sleeve max.	4 mm²
Conductor cross section AWG/kcmil min.	24
Conductor cross section AWG/kcmil max	10
Minimum AWG according to UL/CUL	24
Maximum AWG according to UL/CUL	10

classifications

eCl@ss

eCl@ss 4.0	27141109
eCl@ss 4.1	27141109
eCl@ss 5.0	27141190
eCl@ss 5.1	27141190
eCl@ss 6.0	27261101
eCl@ss 7.0	27440401
eCl@ss 8.0	27440401

ETIM

ETIM 3.0	EC001121
ETIM 4.0	EC002643
ETIM 5.0	EC002643

UNSPSC

UNSPSC 6.01	30211801
UNSPSC 7.0901	39121432

PCB terminal block - ZFKDS 4-10 - 1907539

classifications

UNSPSC

UNSPSC 11	39121432
UNSPSC 12.01	39121432
UNSPSC 13.2	39121432

approvals

UL Recognized / cUL Recognized / GOST / GOST / VDE Gutachten mit Fertigungsüberwachung / IECEE CB Scheme / cULus Recognized /

Approval details

UL Recognized

Usegroups	B	C	D
Nominal voltage UN	300 V	300 V	600 V
Nominal current IN	30 A	30 A	5 A
mm²/AWG/kcmil	24-10	24-10	24-10

cUL Recognized

Usegroups	B	C	D
Nominal voltage UN	300 V	300 V	600 V
Nominal current IN	30 A	30 A	5 A
mm²/AWG/kcmil	24-10	24-10	24-10

GOST

VDE Gutachten mit Fertigungsüberwachung

Nominal voltage UN	630 V
Nominal current IN	32 A
mm²/AWG/kcmil	0.2-4

PCB terminal block - ZFKDS 4-10 - 1907539

approvals

IECEE CB Scheme

Nominal voltage UN	630 V
Nominal current IN	32 A
mm²/AWG/kcmil	0.2-4

cULus Recognized

accessories

Printed circuit board terminal

ZFKDSA 4- 9 - 1907542



Pitch spacer

RZ-ZFKDS 4 - 1928521



Flange

FL-ZFKDS 4 - 1928495



Test plug terminal block

PCB terminal block - ZFKDS 4-10 - 1907539

accessories

MPS-MT - 0201744



Screwdriver tools

SZF 1-0,6X3,5 - 1204517



Labeled terminal marker

ZB10,LGS:FORTL.ZAHLEN - 1053014



Terminal marking

SK U/5,0 WH:UNBEDRUCKT - 0803922



Marker pen

B-STIFT - 1051993



PCB terminal block - ZFKDS 4-10 - 1907539

accessories

Bridge

FBSK 10-10 - 1928437



FBSK 5-10 - 1928424



FBSK 4-10 - 1928411



FBSK 3-10 - 1928408



FBSK 2-10 - 1928398



PCB terminal block - ZFKDS 4-10 - 1907539

accessories

SK 10/5:SO - 0805179



Drawings

Drilling diagram

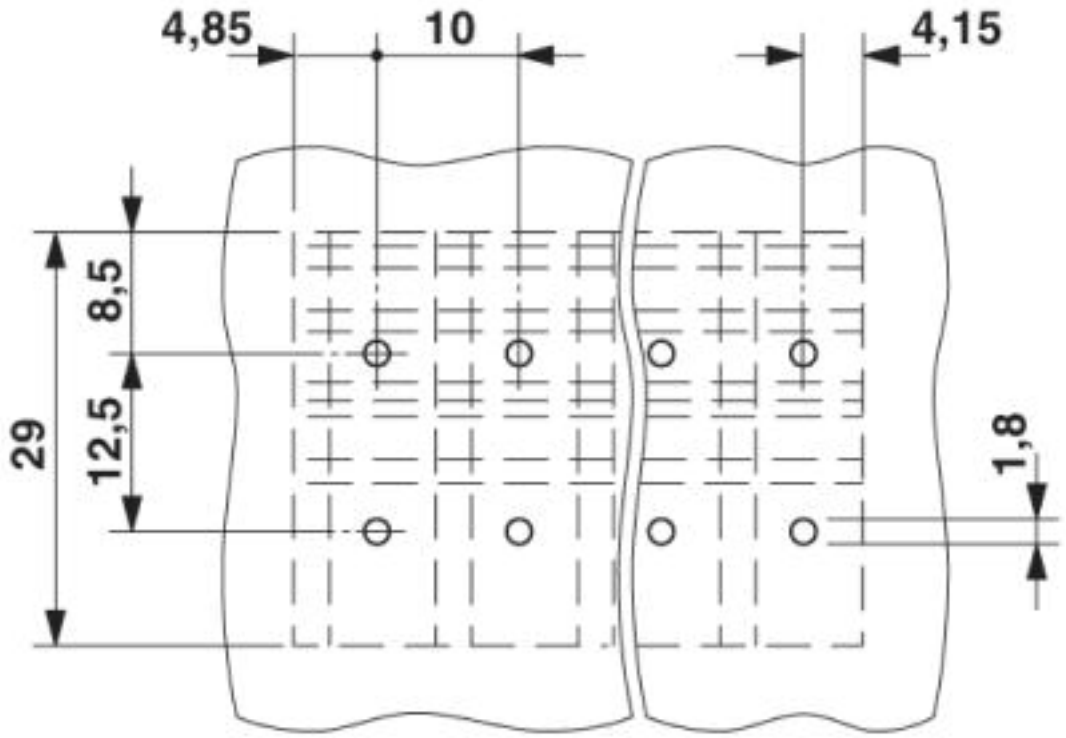

PCB terminal block - ZFKDS 4-10 - 1907539

Dimensioned drawing

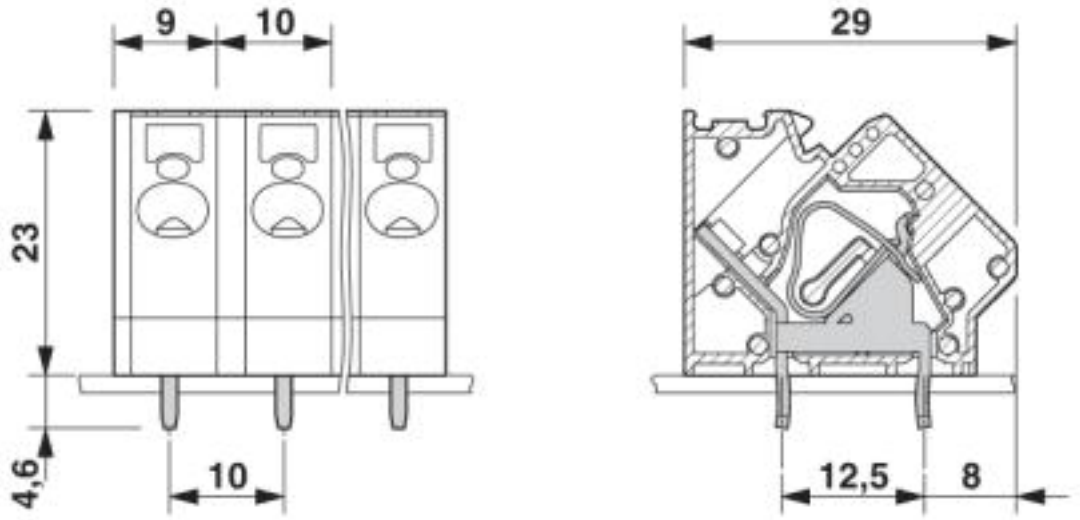

© Phoenix Contact 2013 - all rights reserved
http://www.phoenixcontact.com