Base strip - PC 4/ 7-G-7,62 - 1804849

Please be informed that the data shown in this PDF Document is generated from our Online Catalog. Please find the complete data in the user's documentation. Our General Terms of Use for Downloads are valid (http://download.phoenixcontact.com)



The figure shows a 5-pos. version of the product

Header, Nominal current: 20 A, Rated voltage (III/2): 630 V, Number of positions: 7, Pitch: 7.62 mm, Color: green, Contact surface: Tin, Assembly: Soldering, Mounting flange: Accessory Order No. 1827570

Product Features

- PCB-SHIELD shroud for a professional EMC shield connection
- Vibration-resistant connection by means of separate BF-PC 4 mounting flanges (also for screw connection in the device)
- PC 4 headers for use in combination with all PC 4 plugs
- CP-PC RD coding profiles as protection against mismatching

Key commercial data

package_quantity	50
GTIN	4017918046286

Technical data

Dimensions

Length	29 mm
Pitch	7.62 mm
Dimension a	45.72 mm
Pin dimensions	1 x 0,8 mm
Hole diameter	1.3 mm

General

Range of articles	PC 4/..-G
Insulating material group	I
Rated surge voltage (III/3)	6 kV
Rated surge voltage (III/2)	6 kV
Rated surge voltage (II/2)	6 kV
Rated voltage (III/3)	400 V
Rated voltage (III/2)	630 V
Rated voltage (II/2)	630 V
Connection in acc. with standard	EN-VDE
Nominal current I_N	20 A
Maximum load current	20 A
Insulating material	PA

Base strip - PC 4/ 7-G-7,62 - 1804849

Technical data

General

Inflammability class according to UL 94	V0
Color	green
Number of positions	7

classifications

eCl@ss

eCl@ss 4.0	272607xx
eCl@ss 4.1	27260701
eCl@ss 5.0	27260701
eCl@ss 5.1	27260701
eCl@ss 6.0	27260704
eCl@ss 7.0	27440402
eCl@ss 8.0	27440402

ETIM

ETIM 3.0	EC001121
ETIM 4.0	EC002637
ETIM 5.0	EC002637

UNSPSC

UNSPSC 6.01	30211810
UNSPSC 7.0901	39121409
UNSPSC 11	39121409
UNSPSC 12.01	39121409
UNSPSC 13.2	39121409

approvals

CSA / UL Recognized / cUL Recognized / GOST / LR / GL / BV / DNV / RS / GOST / cULus Recognized /

Approval details

CSA

Usegroups	**B**	**C**
Nominal voltage UN	300 V	300 V
Nominal current IN	20 A	20 A
mm²/AWG/kcmil		

Base strip - PC 4/ 7-G-7,62 - 1804849

approvals

UL Recognized

Usegroups	B	C
Nominal voltage UN	300 V	300 V
Nominal current IN	20 A	20 A
mm²/AWG/kcmil		

cUL Recognized

Usegroups	B	C
Nominal voltage UN	300 V	300 V
Nominal current IN	20 A	20 A
mm²/AWG/kcmil		

GOST

LR

Nominal voltage UN	400 V
Nominal current IN	20 A
mm²/AWG/kcmil	

GL

Nominal voltage UN	400 V
Nominal current IN	20 A
mm²/AWG/kcmil	

BV

DNV

RS

Base strip - PC 4/ 7-G-7,62 - 1804849

approvals

cULus Recognized

accessories

Coding element

CP-PC RD - 1701967



Flange

BF-PC 4 - 1827570



Labeled terminal marker

SK 7,62/3,8:FORTL.ZAHLEN - 0804549



Terminal marking

SK U/3,8 WH:UNBEDRUCKT - 0803906



Base strip - PC 4/ 7-G-7,62 - 1804849

accessories

Marker pen

B-STIFT - 1051993



accessories

SK 7,62/3,8:SO - 0805153



Drawings

Base strip - PC 4/ 7-G-7,62 - 1804849

Drilling diagram

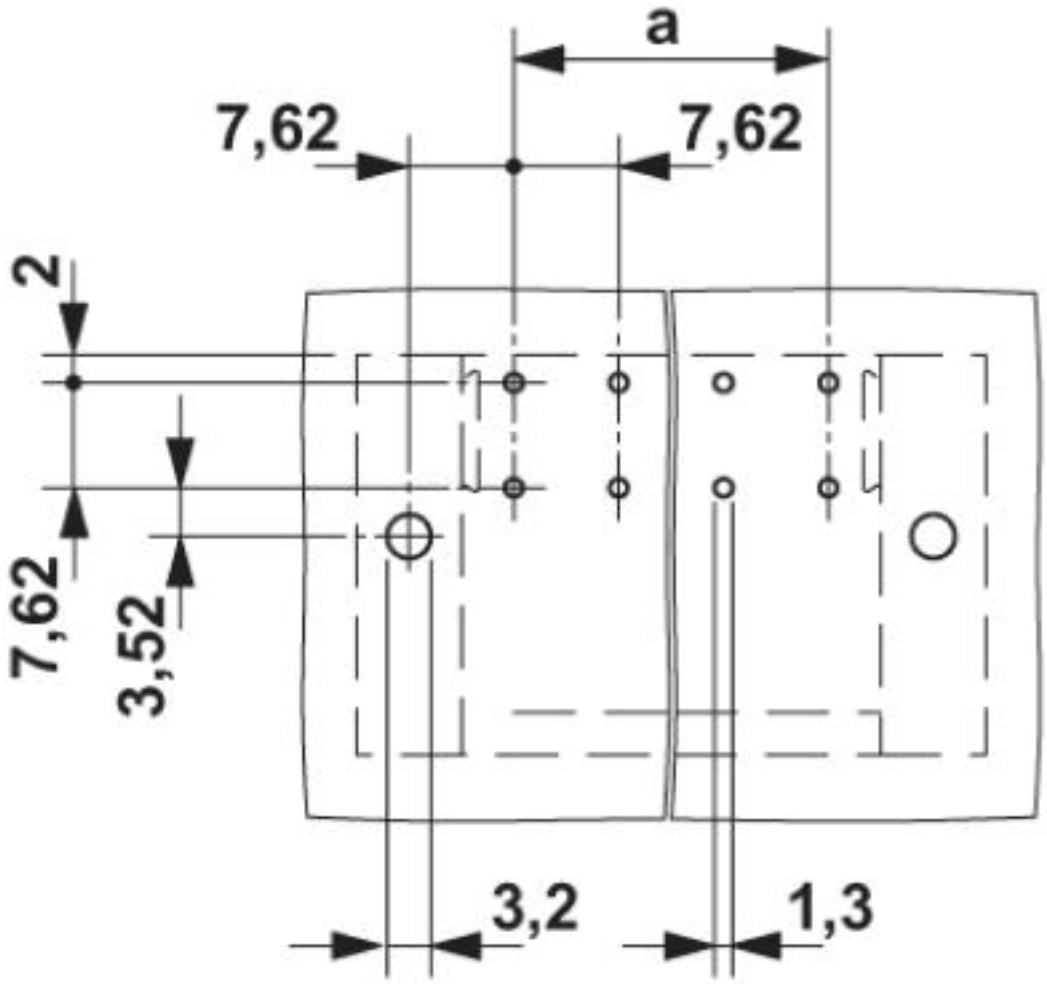

Base strip - PC 4/ 7-G-7,62 - 1804849

Diagram

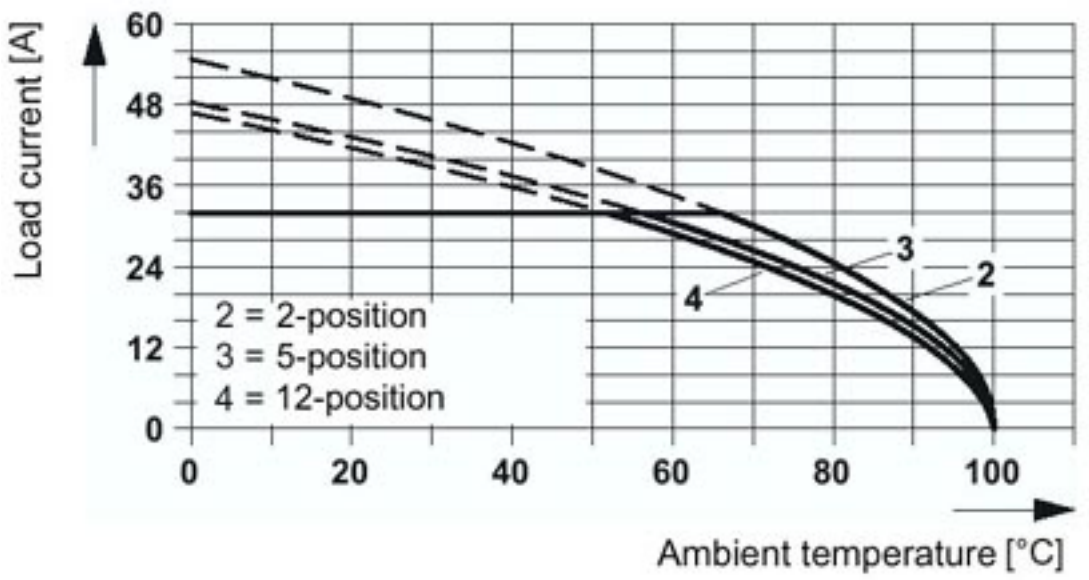

The illustration shows the derating curve for plugs PC 5/...-ST-7,62 in combination with header PC 4/...-G-7,62.

Dimensioned drawing

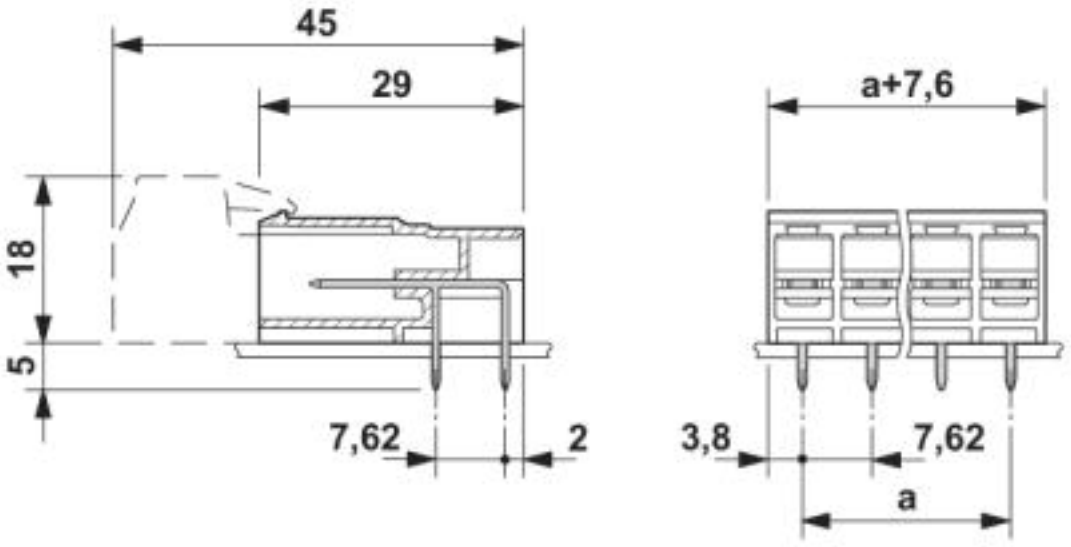

© Phoenix Contact 2013 - all rights reserved
http://www.phoenixcontact.com