HDC insert
HDC S6 6 SAS

Weidmüller Interface GmbH & Co. KG
Klingenbergstraße 16
D-32758 Detmold
Germany
Fon: +49 5231 14-0
Fax: +49 5231 14-292083
www.weidmueller.com



The MixMate series of connectors can simultaneously transmit high rated currents and voltages as well as signals. An axial screw can be used to secure the wire. Axial screw connection TOP connection

General ordering data

Type	HDC S6 6 SAS
Order No.	1790030000
Version	HDC insert, Pin, 690 V, 100 A, No. of poles: 12, Axial screw connection, Size: 8
GTIN (EAN)	4032248212095
Qty.	1 pc(s).

HDC insert
HDC S6 6 SAS

Weidmüller Interface GmbH & Co. KG
Klingenbergstraße 16
D-32758 Detmold
Germany
Fon: +49 5231 14-0
Fax: +49 5231 14-292083
www.weidmueller.com

Technical data

Dimensions and weights

Width	34 mm	Width (inches)	1.339 inch
Height	47.8 mm	Height (inches)	1.882 inch
Depth	111 mm	Depth (inches)	4.37 inch
Net weight	286 g		

Temperatures

Limit temperature	-40 °C ... 125 °C

Environmental Product Compliance

REACH SVHC	Lead 7439-92-1

Dimensions

Height of plug	47.8 mm	Total length base	111 mm

General data

Insulating material	PC glass-fibre reinforced (UL-listed and railway-certified)	Insulating material group	IIIa
Insulation strength	10^{10} Ω	Material	Copper alloy
No. of poles	12	No. of power contacts	6
No. of signal contacts	6	Plugging cycles, silver	≥ 500
Pollution severity	3	Rated current (DIN EN 61984)	100 A
Rated impulse voltage (DIN EN 61984)	8 kV	Rated voltage (DIN EN 61984)	690 V
Rated voltage according to UL/CSA	600 V AC/DC	Series	MixMate
Size	8	Surface finish	Silver passivated
Type	Pin	UL 94 flammability rating	V-0
Volume resistance	≤ 1 mΩ		

Connection data PE

Connection type PE	Screw connection	Rated cross-section	35 mm²
Stripping length PE connection	8 mm	Tightening torque, max. PE connection	8 Nm
Tightening torque, min. PE connection	6 Nm	Wire connection cross section, finely stranded, max.	35 mm²
Wire connection cross-section, finely stranded, min.	16 mm²	Wire cross section, AWG (PE), max.	AWG 2
Wire cross section, AWG (PE), min.	AWG 6		

Power contact

Clamping range, power contact, max.	35 mm²	Clamping range, power contact, min.	16 mm²
No. of poles, performance contact	6	Rated current (DIN EN 61984), power contact	100 A
Rated impulse voltage (DIN EN 61984), power contact	8 kV	Rated voltage (DIN EN 61984), power contact	690 V
Stripping length, performance contact	13 mm	Tightening torque, power contact, max.	8 Nm
Tightening torque, power contact, min.	6 Nm	Type of connection, power contact	Axial screw connection

HDC insert
HDC S6 6 SAS

Weidmüller Interface GmbH & Co. KG
Klingenbergstraße 16
D-32758 Detmold
Germany
Fon: +49 5231 14-0
Fax: +49 5231 14-292083
www.weidmueller.com

Technical data

Signal contact

AF size	SD 0.6 x 3.5	Clamping range, signal contact, max.	2.5 mm²
Clamping range, signal contact, min.	0.5 mm²	No. of poles, signal	6
Rated current (DIN EN 61984), signal	16 A	Rated impulse voltage (DIN EN 61984), signal	6 kV
Rated voltage (DIN EN 61984), signal contact	400 V	Stripping length, signal	12 mm
Tightening torque, signal contact, max.	0.8 Nm	Tightening torque, signal contact, min.	0.4 Nm
Type of connection, signal	Screw connection		

Version

Clamping screw	M 7 x 0.75 mm	Conductor cross-section, max.	35 mm²
Conductor cross-section, min.	16 mm²	Material	Copper alloy
Size	8	Stripping length, rated connection	13 mm
Surface finish	Silver passivated	Type of connection	Axial screw connection
Volume resistance	≤ 1 mΩ	Wire connection cross section AWG, max.	AWG 2
Wire connection cross section AWG, min.	AWG 6	Wire connection cross section, finely stranded, max.	35 mm²
Wire connection cross-section, finely stranded, min.	16 mm²		

Classifications

ETIM 3.0	EC002413	ETIM 4.0	EC001121
ETIM 5.0	EC001121	ETIM 6.0	EC000438
UNSPSC	30-21-18-01	eClass 5.1	27-14-34-19
eClass 6.2	27-26-12-90	eClass 7.1	27-44-02-90
eClass 8.1	27-44-02-90	eClass 9.0	27-44-02-05
eClass 9.1	27-44-02-05		

Approvals

Approvals	c UL us
ROHS	Conform

Downloads

Brochure/Catalogue	CAT 3 HDC 17/18 EN FL FIELDWIRING EN
Engineering Data	EPLAN, WSCAD, Zuken E3.S

HDC insert
HDC S6 6 SAS

Weidmüller Interface GmbH & Co. KG
Klingenbergstraße 16
D-32758 Detmold
Germany
Fon: +49 5231 14-0
Fax: +49 5231 14-292083
www.weidmueller.com

Drawings

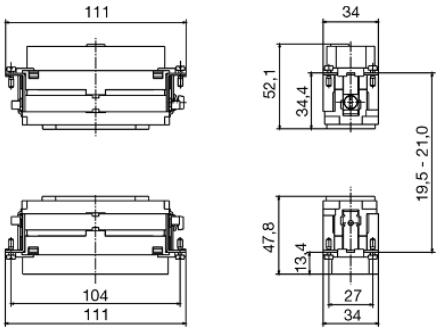

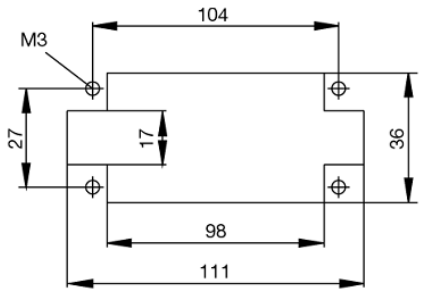

Tightening torques and screwing tools

Screw size	Connector type	Dia. tightening torque in Nm	Recommended blade inserts and AF size for hexagon socket
M 2.5	**Signal contacts**		
	S 6/6	0.5 - 0.55	SD 0.6 x 3.5 mm or PZ0
	S 6/12	0.5 - 0.55	SD 0.6 x 3.5 mm or PZ0
M 2.9 x 0.5	**Fastening screws**		
	HQ 4/2	0.8 (plastic) / 1.1 (metal)	SD 0.6 x 3.5 mm or PH0
	HQ 8	0.8 (plastic) / 1.1 (metal)	SD 0.6 x 3.5 mm or PH0
	HQ 17	0.8 (plastic) / 1.1 (metal)	SD 0.6 x 3.5 mm or PH0
M 3	**Contact screws**		
	HA 3	0.5 - 0.55	SD 0.5 x 3.0 mm
	HA 4	0.5 - 0.55	SD 0.5 x 3.0 mm
	HA 10 bis HA 48	0.5 - 0.55	SD 0.6 x 3.5 mm or PH0
	HE	0.5 - 0.55	SD 0.6 x 3.5 mm or PZ0
	HVE	0.5 - 0.55	SD 0.6 x 3.5 mm or PZ0
	Signal contacts:		
	S 4/2	0.5 - 0.55	SD 0.6 x 3.5 mm or PZ0
	S 4/8	0.5 - 0.55	SD 0.6 x 3.5 mm or PZ0
	PE connection via female contact		
	S 4	0.5 - 0.8	SD 0.6 x 3.5 mm
	ConCept modular frame, metal	0.5 - 0.55	SD 0.6 x 3.5 mm
	PE terminal		
	HQ 5	0.5 - 0.55	SD 0.6 x 3.5 or 0.8 x 4 mm
	HQ 7	0.5 - 0.55	SD 0.6 x 3.5 or 0.8 x 4 mm
	Fastening screws	0.5 - 0.55	SD 0.6 x 3.5 mm or PZ0
	Guide pin	0.5 - 0.55	SD 0.6 x 3.5 mm or PZ0
	Guide bush	0.5 - 0.55	SD 0.6 x 3.5 mm or PZ0
	Coding pins	0.5 - 0.55	SD 0.6 x 3.5 mm or PZ0
M 4	**Contact screws**		
	HSB	1.2 - 1.5	SD 0.6 x 3.5 or 0.8 x 4 mm or PZ1
	PE connection via male contact		
	S 4	0.5 - 0.8	SD 0.6 x 3.5 mm
	ConCept modular frame, metal	1.2 - 1.5	SD 0.6 x 3.5 mm
	PE terminal		
	HA	1.2 - 1.5	SD 0.6 x 3.5 or 0.8 x 4 mm or PH1
	HE	1.2 - 1.5	SD 0.6 x 3.5 or 0.8 x 4 mm or PH1
	HEE	1.2 - 1.5	SD 0.6 x 3.5 or 0.8 x 4 mm or PH1
	HVE	1.2 - 1.5	SD 0.6 x 3.5 or 0.8 x 4 mm or PH1
	HD	1.2 - 1.5	SD 0.6 x 3.5 or 0.8 x 4 mm or PZ1
	HDD	1.2 - 1.5	SD 0.6 x 3.5 or 0.8 x 4 mm or PZ1
	S 6/6 (for signal contacts)	1.2 - 1.5	0.8 x 4 mm or PZ1
	ConCept modular frame, plastic	1.2 - 1.5	0.8 x 4 mm or PZ1
M 5	**PE terminal**		
	HSB	2 - 2.5	SD 1 x 5.5 mm or PZ2
	S 4/0 (Screw connection)	2 - 2.5	SD 1.2 x 6.5 mm or PH2
	S 4/0 (Axial screw connection)	2 - 2.5	SD 0.8 x 4 mm or PZ 2
	S 4/2	2 - 2.5	SD 1.2 x 6.5 mm or PH2
	S 4/8	2 - 2.5	SD 1.2 x 6.5 mm or PH2
	S 6/12	2 - 2.5	SD 0.8 x 4 mm or PZ 2
	S 6/36	2 - 2.5	SD 1.2 x 6.5 mm or PH2
	S 8/24	2 - 2.5	SD 1.2 x 6.5 mm or PH2
	S 12/2	2 - 2.5	SD 1.2 x 6.5 mm or PH2
M 6	**Power contacts**		
	S 4/0 (Screw connection)	1.2 (1.5 mm^2) / 2 (2.5 mm^2) / 3 (4-16 mm^2)	SD 0.8 x 4 mm
	S 4/2	1.2 (1.5 mm^2) / 2 (2.5 mm^2) / 3 (4-16 mm^2)	SD 0.8 x 4 mm
	S 4/8	1.2 (1.5 mm^2) / 2 (2.5 mm^2) / 3 (4-16 mm^2)	SD 0.8 x 4 mm
M 7 x 0.75	**Power contacts**		
	S 4	1.1 – 1.7	SW 2
	S 6/6 (+ PE)	6 – 8	SW 4
M 8 x 0.75	**Power contacts**		
	S 6/12	1.1 – 1.7	SW 2
	S 8/0 (+ PE)	6 (10-16 mm^2) - 7 (25 mm^2)	SW 4
M10 x 1	**Power contacts**		
	S 4/0 (Axial connection)	2 – 3	SW 3

Increasing the tightening torque does not improve the contact resistance. The stated torque settings offer optimal mechanical, thermal and electrical conditions. Exceeding the recommended values may even damage the conductor and terminal.