Base strip - GMSTBA 2,5 HC/ 4-G-7,62 - 1728879

Please be informed that the data shown in this PDF Document is generated from our Online Catalog. Please find the complete data in the user's documentation. Our General Terms of Use for Downloads are valid (http://download.phoenixcontact.com)



The illustration shows the 5-position version of the product

Header, Nominal current: 16 A, Rated voltage (III/2): 630 V, Number of positions: 4, Pitch: 7.62 mm, Color: green, Contact surface: Tin, Assembly: Soldering

Product Features

- GMSTB 2,5 HC headers for use in combination with GMSTB 2,5 HCV plugs
- CR-MSTB coding sections as protection against mismatching
- Compact 7.62 mm pitch

Key commercial data

package_quantity	50
GTIN	4046356150033

Technical data

Dimensions

Length	12 mm
Pitch	7.62 mm
Dimension a	22.86 mm
Pin dimensions	1 x 1 mm
Hole diameter	1.4 mm

General

Range of articles	GMSTBA 2,5 HC/..-G
Insulating material group	I
Rated surge voltage (III/3)	6 kV
Rated surge voltage (III/2)	6 kV
Rated surge voltage (II/2)	6 kV
Rated voltage (III/3)	500 V
Rated voltage (III/2)	630 V
Rated voltage (II/2)	1000 V
Connection in acc. with standard	EN-VDE
Nominal current I_N	16 A
Maximum load current	16 A
Insulating material	PA
Inflammability class according to UL 94	V0

Base strip - GMSTBA 2,5 HC/ 4-G-7,62 - 1728879

Technical data

General

Color	green
Number of positions	4

classifications

eCl@ss

eCl@ss 4.0	272607xx
eCl@ss 4.1	27260701
eCl@ss 5.0	27260701
eCl@ss 5.1	27260701
eCl@ss 6.0	27260704
eCl@ss 7.0	27440402
eCl@ss 8.0	27440402

ETIM

ETIM 3.0	EC001121
ETIM 4.0	EC002637
ETIM 5.0	EC002637

UNSPSC

UNSPSC 6.01	30211810
UNSPSC 7.0901	39121409
UNSPSC 11	39121409
UNSPSC 12.01	39121409
UNSPSC 13.2	39121409

approvals

UL Recognized / cUL Recognized / GOST / GOST / cULus Recognized /

Approval details

UL Recognized

Usegroups	**B**	**D**
Nominal voltage UN	300 V	300 V
Nominal current IN	18.5 A	10 A
mm²/AWG/kcmil		

cUL Recognized

Base strip - GMSTBA 2,5 HC/ 4-G-7,62 - 1728879

approvals

Usegroups	B	D
Nominal voltage UN	300 V	300 V
Nominal current IN	18.5 A	10 A
mm²/AWG/kcmil		

GOST

cULus Recognized

accessories

Coding element

CR-MSTB - 1734401



Filler plug

MSTB-BL - 1755477



Labeled terminal marker

Base strip - GMSTBA 2,5 HC/ 4-G-7,62 - 1728879

accessories

SK 7,62/3,8:FORTL.ZAHLEN - 0804549



Drawings

Drilling diagram

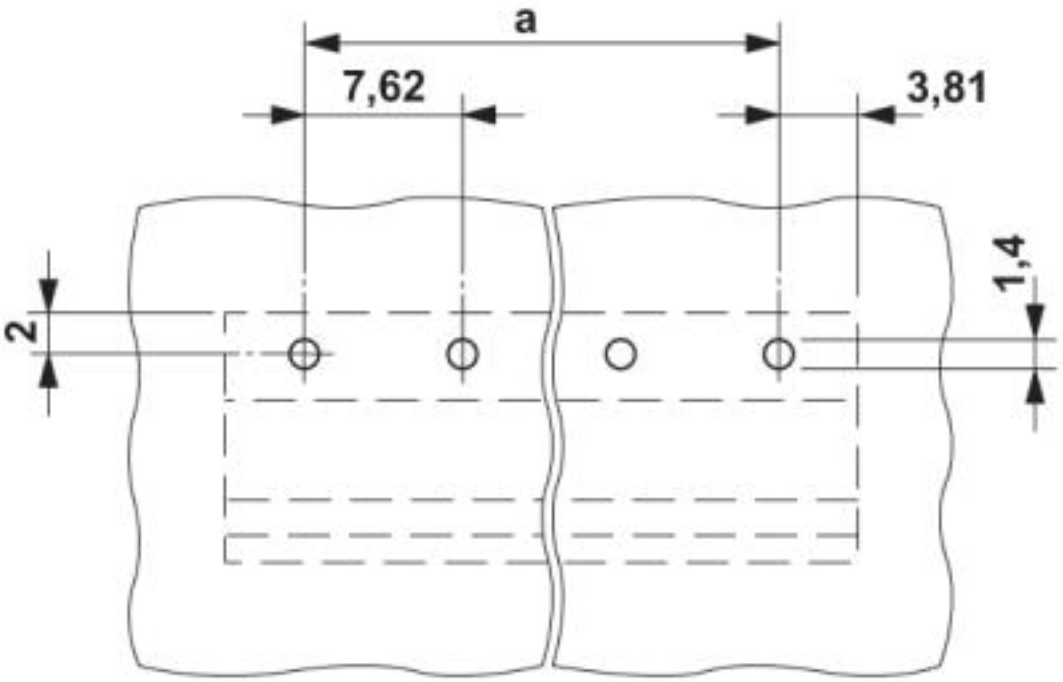

Base strip - GMSTBA 2,5 HC/ 4-G-7,62 - 1728879

Diagram

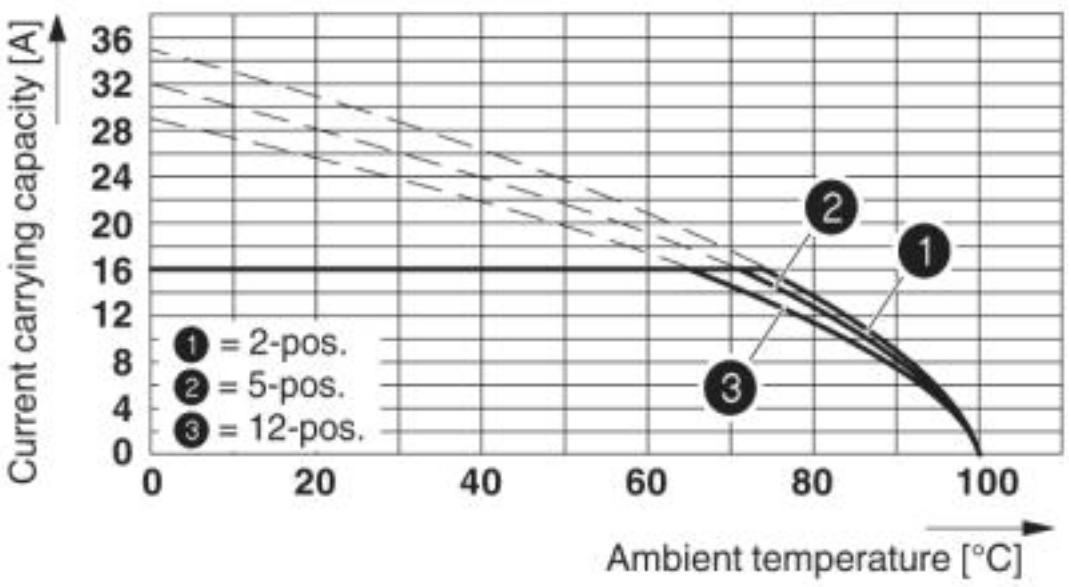

Derating curve for: GMSTB 2,5 HCV/...-ST-7,62 with GMSTBA 2,5 HC/...-G-7,62

Dimensioned drawing

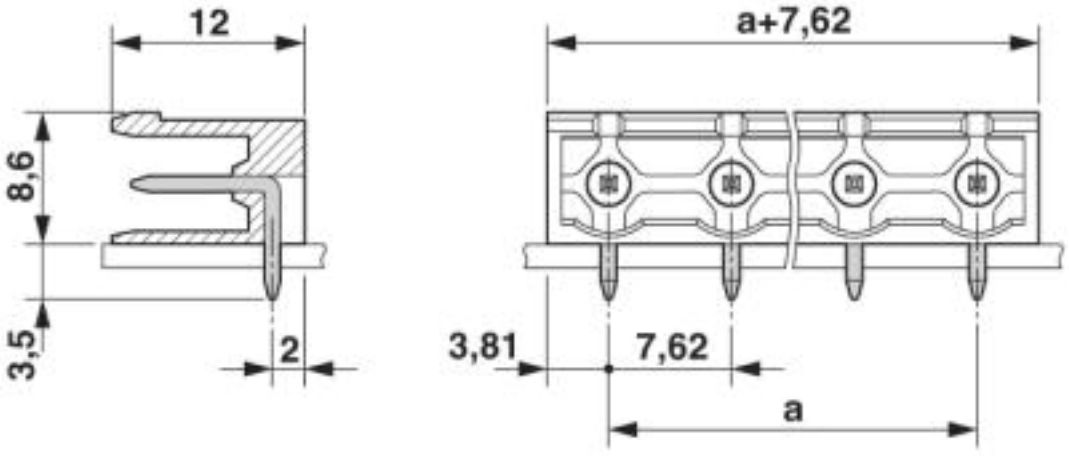

© Phoenix Contact 2013 - all rights reserved
http://www.phoenixcontact.com