OMNIMATE Signal - series B2L/S2L 3.50 - 2-row
S2L-SMT 3.50/12/90G 3.2SN BK BX

Weidmüller Interface GmbH & Co. KG
Klingenbergstraße 16
D-32758 Detmold
Germany
Fon: +49 5231 14-0
Fax: +49 5231 14-292083
www.weidmueller.com

Product image



Similar to illustration

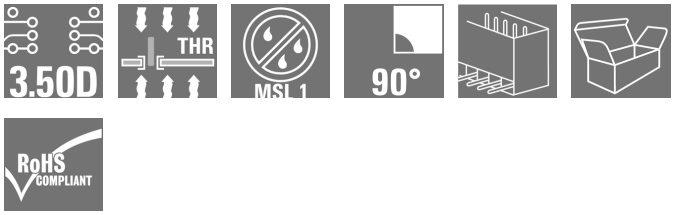

High-temperature-resistant, straight, 2-tier male connector for all common soldering methods. Optimised for automatic assembly. Packed in box or tape. 3.2 mm solder pin suitable for reflow and wave soldering. These male connectors can be labelled and coded.

General ordering data

Type	S2L-SMT 3.50/12/90G 3.2SN BK BX
Order No.	1794240000
Version	PCB plug-in connector, male header, closed side, THT/THR solder connection, 3.50 mm, No. of poles: 12, 90°, Solder pin length (l): 3.2 mm, tinned, black, Box
GTIN (EAN)	4032248231294
Qty.	78 pc(s).
Product data	IEC: 160 V / 10 A UL: 150 V / 10 A
Packaging	Box

OMNIMATE Signal - series B2L/S2L 3.50 - 2-row
S2L-SMT 3.50/12/90G 3.2SN BK BX

Weidmüller Interface GmbH & Co. KG
Klingenbergstraße 16
D-32758 Detmold
Germany
Fon: +49 5231 14-0
Fax: +49 5231 14-292083
www.weidmueller.com

Technical data

Dimensions and weights

Width	22.4 mm	Width (inches)	0.882 inch
Height	14.2 mm	Height (inches)	0.559 inch
Height of lowest version	10.8 mm	Depth	14.2 mm
Depth (inches)	0.559 inch	Net weight	2.38 g

System specifications

Product family	OMNIMATE Signal - series B2L/S2L 3.50 - 2-row	Type of connection	Board connection
Mounting onto the PCB	THT/THR solder connection	Pitch in mm (P)	3.5 mm
Pitch in inches (P)	0.138 inch	Outgoing elbow	90°
No. of poles	12	Number of solder pins per pole	1
Solder pin length (l)	3.2 mm	Tolerance of solder pin position	± 0.15 mm
Solder pin dimensions	d = 1.0 mm, Octagonal	Solder eyelet hole diameter (D)	1.3 mm
Solder eyelet hole diameter tolerance (D)	+ 0,1 mm	Outside diameter of solder pad	2.1 mm
Template aperture diameter	1.9 mm	L1 in mm	17.5 mm
L1 in inches	0.689 inch	Number of rows	1
Pin series quantity	2	Touch-safe protection acc. to DIN VDE 57 106	Safe from back-of-hand touch
Touch-safe protection acc. to DIN VDE 0470	IP 10	Can be coded	Yes
Plugging cycles	25	Plugging force/pole, max.	3 N
Pulling force/pole, max.	6 N		

Material data

Insulating material	LCP GF	Colour	black
Colour chart (similar)	RAL 9011	Insulating material group	IIIb
CTI	≥ 175	Insulation strength	≥ 10^8 Ω
Moisture Level (MSL)	1	UL 94 flammability rating	V-0
GWIT	930 °C	GWFI	960 °C
Contact material	Copper alloy	Contact surface	tinned
Layer structure of solder connection	2-3 µm Ni / 5-7 µm Sn glossy	Storage temperature, min.	-25 °C
Storage temperature, max.	55 °C	Max. relative humidity during storage	80 %
Operating temperature, min.	-50 °C	Operating temperature, max.	100 °C
Temperature range, installation, min.	-30 °C	Temperature range, installation, max.	100 °C

Rated data acc. to IEC

tested acc. to standard	IEC 60664-1, IEC 61984	Rated current, min. no. of poles (Tu=20°C)	10 A
Rated current, max. no. of poles (Tu=20°C)	10 A	Rated current, min. no. of poles (Tu=40°C)	9 A
Rated current, max. no. of poles (Tu=40°C)	8.5 A	Rated voltage for surge voltage class / pollution degree II/2	160 V
Rated voltage for surge voltage class / pollution degree III/2	125 V	Rated voltage for surge voltage class / pollution degree III/3	50 V
Rated impulse voltage for surge voltage class/ pollution degree II/2	1.5 kV	Rated impulse voltage for surge voltage class/ pollution degree III/2	1.5 kV
Rated impulse voltage for surge voltage class/ contamination degree III/3	2.5 kV	Short-time withstand current resistance	3 x 1s with 77 A

OMNIMATE Signal - series B2L/S2L 3.50 - 2-row
S2L-SMT 3.50/12/90G 3.2SN BK BX

Weidmüller Interface GmbH & Co. KG
Klingenbergstraße 16
D-32758 Detmold
Germany
Fon: +49 5231 14-0
Fax: +49 5231 14-292083
www.weidmueller.com

Technical data

Rated data acc. to CSA

Institute (CSA)		Certificate No. (CSA)	200039-1176845
Rated voltage (Use group B / CSA)	150 V	Rated voltage (Use group C / CSA)	50 V
Rated voltage (Use group D / CSA)	150 V	Rated current (Use group B / CSA)	5 A
Rated current (Use group C / CSA)	9.5 A	Rated current (Use group D / CSA)	9.5 A
Reference to approval values	Specifications are maximum values, details - see approval certificate.		

Rated data acc. to UL 1059

Institute (UR)		Certificate No. (UR)	E60693
Rated voltage (Use group B / UL 1059)	150 V	Rated voltage (Use group C / UL 1059)	50 V
Rated current (Use group B / UL 1059)	10 A	Rated current (Use group C / UL 1059)	10 A
Reference to approval values	Specifications are maximum values, details - see approval certificate.		

Packing

Packaging	Box	VPE length	58 mm
VPE width	72 mm	VPE height	112 mm

Classifications

ETIM 4.0	EC002637	ETIM 5.0	EC002637
ETIM 6.0	EC002637	UNSPSC	30-21-18-10
eClass 5.1	27-26-07-01	eClass 6.2	27-26-07-04
eClass 7.1	27-44-04-02	eClass 8.1	27-44-04-02
eClass 9.0	27-44-04-02	eClass 9.1	27-44-04-02

Notes

Notes	• Additional colours on request • Gold-plated contact surfaces on request • Spacing between rows: see hole layout • Rated current related to rated cross-section & min. No. of poles. • P on drawing = pitch • Rated data refer only to the component itself. Clearance and creepage distances to other components are to be designed in accordance with the relevant application standards.
IPC conformity	Conformity: The products are developed, manufactured and delivered according international recognized standards and norms and comply with the assured properties in the data sheet resp. fulfill decorative properties in accordance with IPC-A-610 "Class 2". Further claims on the products can be evaluated on request.

OMNIMATE Signal - series B2L/S2L 3.50 - 2-row
S2L-SMT 3.50/12/90G 3.2SN BK BX

Weidmüller Interface GmbH & Co. KG
Klingenbergstraße 16
D-32758 Detmold
Germany
Fon: +49 5231 14-0
Fax: +49 5231 14-292083
www.weidmueller.com

Technical data

Approvals

Approvals	
ROHS	Conform

Downloads

Approval/Certificate/Document of Conformity	Declaration of the Manufacturer
Brochure/Catalogue	FL DRIVES EN MB SMT EN FL DRIVES DE MB DEVICE MANUF. EN FL BUILDING SAFETY EN FL APPL LED LIGHTING EN FL INDUSTR.CONTROLS EN FL MACHINE SAFETY EN FL HEATING ELECTR EN FL APPL_INVERTER EN FL_BASE_STATION_EN FL ELEVATOR EN FL POWER SUPPLY EN FL 72H SAMPLE SER EN PO OMNIMATE EN
Engineering Data	STEP
SMT white paper	Download Whitepaper

OMNIMATE Signal - series B2L/S2L 3.50 - 2-row
S2L-SMT 3.50/12/90G 3.2SN BK BX

Weidmüller Interface GmbH & Co. KG
Klingenbergstraße 16
D-32758 Detmold
Germany
Fon: +49 5231 14-0
Fax: +49 5231 14-292083
www.weidmueller.com

Drawings

Dimensional drawing

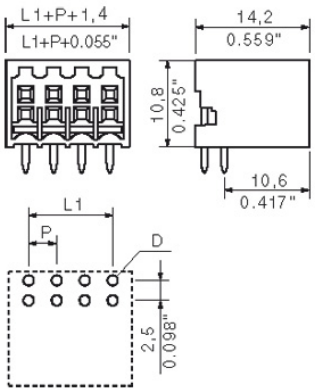

MASSE OHNE TOLERANZ SIND KEINE PRUEFMASSE
DIMS. WITHOUT TOLERANCE ARE NOT CONTROL DIMS.

DIE DEUTSCHE VERSION IST VERBINDLICH
THE GERMAN VERSION IS BINDING

WEITERGABE SOWIE VERVIELFAELTIGUNG DIESES DOKUMENTS, VERWERTUNG UND MITTEILUNG SEINES INHALTS SIND VERBOTEN, SOWEIT NICHT AUSDRUECKLICH GESTATTET.
ZUWIDERHANDLUNGEN VERPFLICHTEN ZU SCHADENERSATZ. ALLE RECHTE FUER DEN FALL DER PATENT-, GEBRAUCHSMUSTER- ODER GESCHMACKSMUSTEREINTRAGUNG VORBEHALTEN.
THE REPRODUCTION, DISTRIBUTION AND UTILIZATION OF THIS DOCUMENT AS WELL AS THE COMMUNICATION OF ITS CONTENTS TO OTHERS WITHOUT EXPLICID AUTHORIZATION IS PROHIBITED.
OFFENDERS WILL BE HELD LIABLE FOR THE PAYMENT OF DAMAGES. WEIDMUELLER EXCLUSIVELY RESERVES THE RIGHT TO FILE FOR PATENTS, UTILITY MODELS OR DESIGNS.
© WEIDMUELLER INTERFACE GmbH & Co.KG

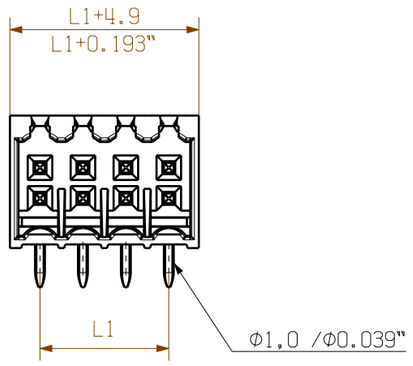

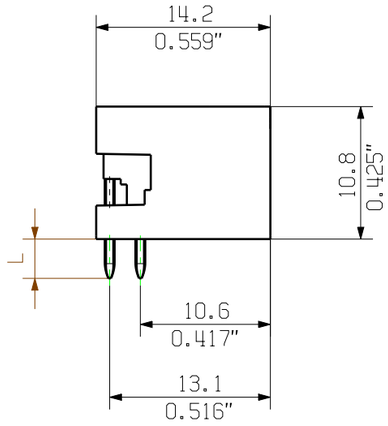

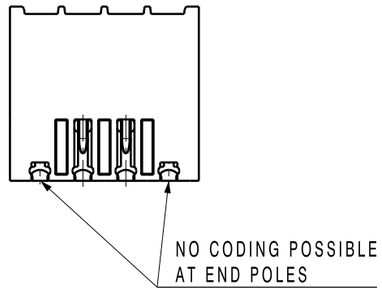

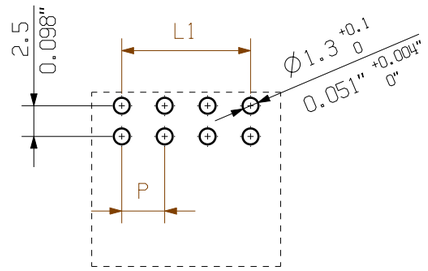

HOLE PATTERN

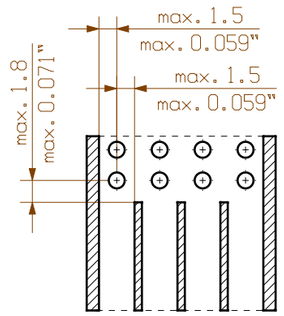

PASTE-FREE AREA

1:1

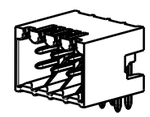

P= PITCH
n= NO OF POLES
SHOWN: S2L-SMT 3.50/04/90G

STIFTLAENGE/ PIN LENGTH L	TOLERANZ/ TOLERANCES
1.5	0
	-0.3
1.8	0
	-0.3
2.3	0
	-0.3
3.2	0
	-0.3
3.5	0
	-0.3

n	L1 [mm]	L1 [inch]
36	59,50	2,343
34	56,00	2,205
32	52,50	2,067
30	49,00	1,929
28	45,50	1,791
26	42,00	1,654
24	38,50	1,516
22	35,00	1,378
20	31,50	1,240
18	28,00	1,102
16	24,50	0,965
14	21,00	0,827
12	17,50	0,689
10	14,00	0,551
8	10,50	0,413
6	7,00	0,276
4	3,50	0,138

For the mounting of PCBs, it should be noted that the rated data relates only to the PCB components alone. The neccessary creepage and clearance paths must be observed in connection with the respective applicant in accordance to IEC 664 / VDE 0110.
The current-carrying capacity and pitch tolerance is to be determined according to DIN IEC 326 part 3 very fine.

Weidmüller PCB components are tested to the DIN EN 61984 standard, and are valid for its field of application. Provided that the components are used to the intended purpose, all requirements with respect to the occuring of electrical, mechanical, thermic and corrosive stress will be satisfied.

RoHS COMPLIANT

DIN ISO 2768

80058/3
19.01.15 HELIS_MA 01

MODIFICATION

CAT.NO.: .

Weidmüller

C 32283 26
DRAWING NO. ISSUE NO.

SHEET 02 OF 03 SHEETS

	DATE	NAME
DRAWN	19.03.2007	LANG_T
RESPONSIBLE		AMANN_A
CHECKED	21.01.2015	HERTEL_S
APPROVED		LANG_T

SCALE: 2/1

SUPERSEDES: .

S2L-SMT 3.50/../90...
STIFTLEISTE
MALE HEADER

PRODUCT FILE: S2L-SMT 3.50 7272

Wave Solder Profile

Recommended wave solderding profiles

Weidmüller Interface GmbH & Co. KG
Klingenbergstraße 16
D-32758 Detmold
Germany
Fon: +49 5231 14-0
Fax: +49 5231 14-292083
www.weidmueller.com

Single Wave:

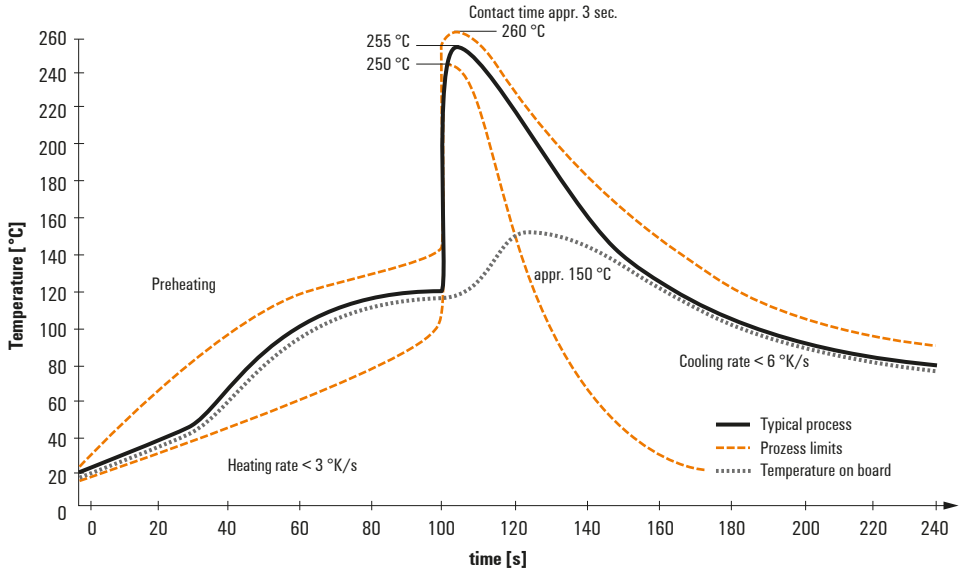

Double Wave:

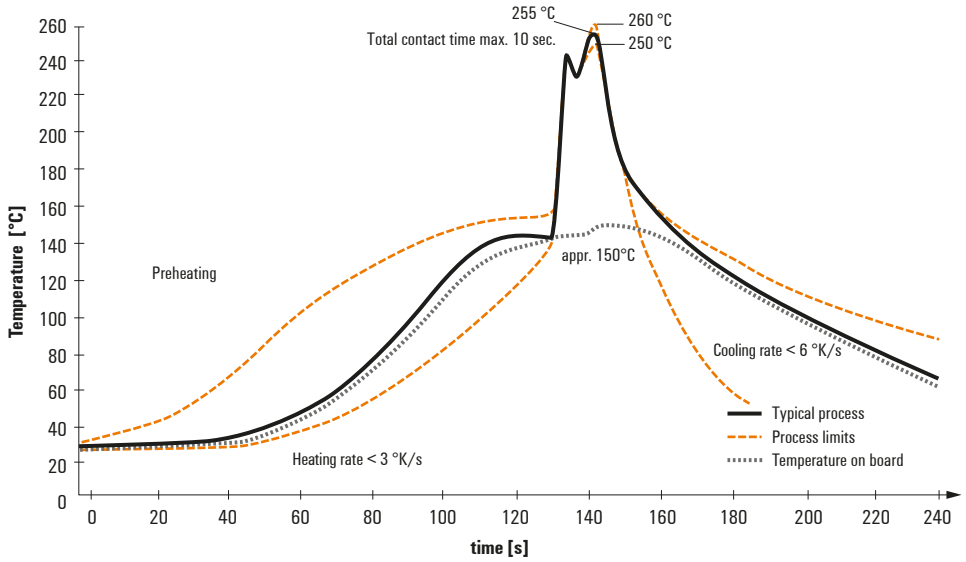

Wave soldering profiles

Wired connection elements should be processed in accordance with the DIN EN 61760-1 standard. We have included two recommendations for practical wave soldering profiles, with which Weidmüller PCB terminals and connectors are qualified.

When choosing a suitable profile for your application, the following factors also need to be considered:
- PCB thickness
- Proportion of Cu in the layers
- Single/double-sided assembly
- Product range
- Heating and cooling rates

The single and double wave profiles each indicate the recommended operating range, including the maximum soldering temperature of 260°C. In practice, the maximum soldering temperature is quite often well below the above maximum profile.

We reserve the right to make technical changes.

Reflow Solder Profile

Recommended reflow soldering profile

Weidmüller Interface GmbH & Co. KG
Klingenbergstraße 16
D-32758 Detmold
Germany
Fon: +49 5231 14-0
Fax: +49 5231 14-292083
www.weidmueller.com

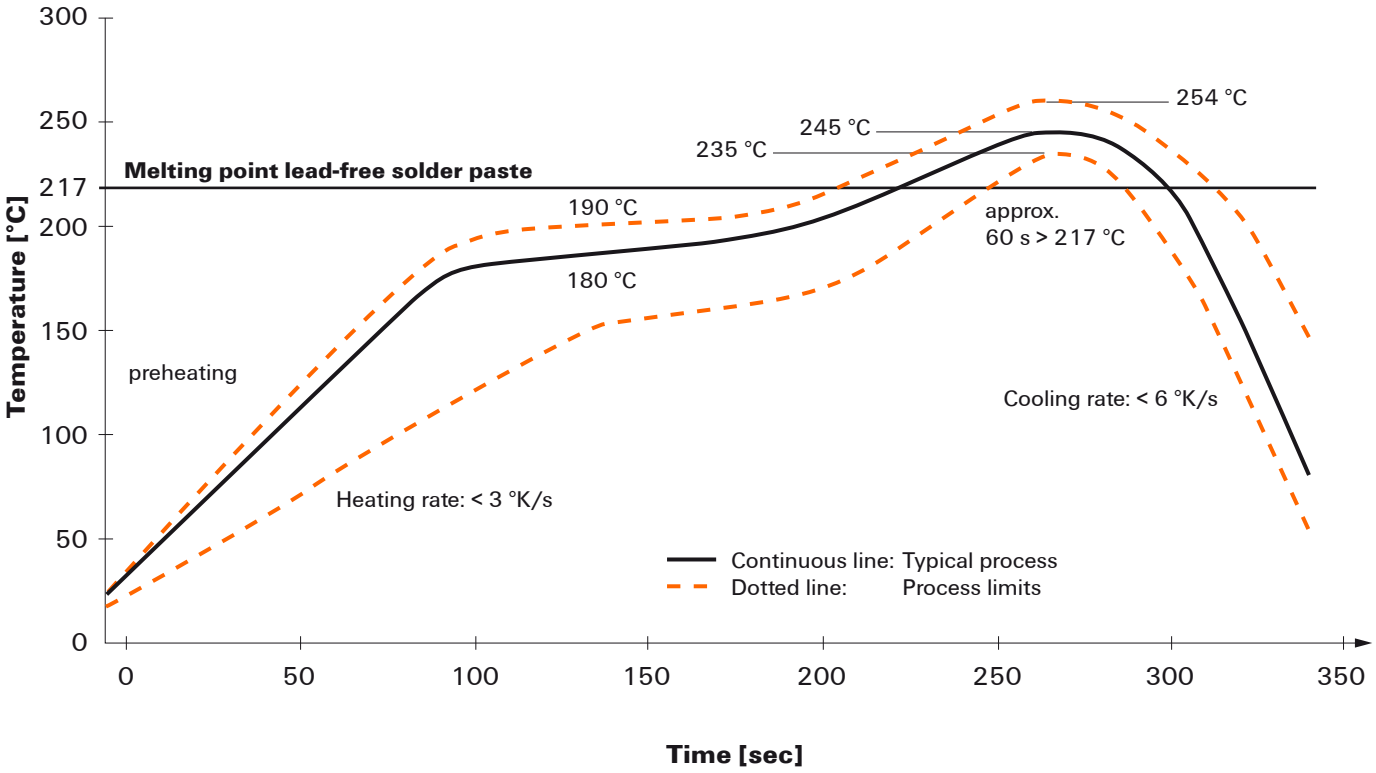

Reflow soldering profile

The perfect soldering profile for SMT Surface Mount Technology is one the most exiting question in SMT production. But there are more than one correct answer: The diagram of temperature-on-time is related to processing features of solder paste and to maximum load of components.

We have to consider the following parameters:
- Time for pre heating
- Maximum temperature
- Time above melting point
- Time for cooling
- Maximum heating rate
- Maximum cooling rate

We recommend a typical solder profile with associated process limits. With preheating components and board are prepared smoothly for the solder phase. Heating rate is typically ≤ +3K/s. In parallel the solder paste is ‚activated'. The time above melting point of 217°C the paste gets liquid and components and boards begin to connect. The maximum temperature of 245°C to 254°C should stay between 10 and 40 seconds. In the cooling phase at ≥ -6K/s solder is cured. Board and components cool down while avoiding cold cracks.

We reserve the right to make technical changes.