Base strip - ICV 2,5 HC/ 2-G-5,08 - 1943535

Please be informed that the data shown in this PDF Document is generated from our Online Catalog. Please find the complete data in the user's documentation. Our General Terms of Use for Downloads are valid (http://download.phoenixcontact.com)



The figure shows a 10-position version of the product

Header, Nominal current: 16 A, Rated voltage (III/2): 320 V, Number of positions: 2, Pitch: 5.08 mm, Color: green, Contact surface: Tin, Assembly: Soldering, COMBICON connectors may only be activated under no load conditions. If for operating reasons small loads must be switched, experimental values are available upon request.

Product Features

- Double steel spring as extra safety against contact corrosion
- Vibration-resistant connection by means of threaded flange (-GF)
- Inverted 16 A (HC) headers with socket contact for shock-proof applications or PCB/PCB connections

Key commercial data

package_quantity	50
GTIN	4017918885267

Technical data

Dimensions

Length	10.2 mm
Pitch	5.08 mm
Dimension a	5.08 mm

General

Range of articles	ICV 2,5 HC/..-G
Insulating material group	I
Rated surge voltage (III/3)	4 kV
Rated surge voltage (III/2)	4 kV
Rated surge voltage (II/2)	4 kV
Rated voltage (III/3)	320 V
Rated voltage (III/2)	320 V
Rated voltage (II/2)	630 V
Connection in acc. with standard	EN-VDE
Nominal current I_N	16 A
Maximum load current	16 A
Insulating material	PA
Inflammability class according to UL 94	V0
Color	green
Number of positions	2

Base strip - ICV 2,5 HC/ 2-G-5,08 - 1943535

Technical data

classifications

eCl@ss

eCl@ss 4.0	272607xx
eCl@ss 4.1	27260701
eCl@ss 5.0	27260701
eCl@ss 5.1	27260701
eCl@ss 6.0	27260704
eCl@ss 7.0	27440402
eCl@ss 8.0	27440402

ETIM

ETIM 3.0	EC001121
ETIM 4.0	EC002637
ETIM 5.0	EC002637

UNSPSC

UNSPSC 6.01	30211810
UNSPSC 7.0901	39121409
UNSPSC 11	39121409
UNSPSC 12.01	39121409
UNSPSC 13.2	39121409

approvals

UL Recognized / VDE Gutachten mit Fertigungsüberwachung / cUL Recognized / GOST / IECEE CB Scheme / GOST / CCA / cULus Recognized /

Approval details

UL Recognized

Usegroups	**B**	**D**
Nominal voltage UN	250 V	300 V
Nominal current IN	16 A	10 A
mm²/AWG/kcmil		

VDE Gutachten mit Fertigungsüberwachung

Nominal voltage UN	250 V
Nominal current IN	16 A

Base strip - ICV 2,5 HC/ 2-G-5,08 - 1943535

approvals

mm²/AWG/kcmil	

cUL Recognized

Usegroups	B	D
Nominal voltage UN	250 V	300 V
Nominal current IN	16 A	10 A
mm²/AWG/kcmil		

GOST

IECEE CB Scheme

Nominal voltage UN	250 V
Nominal current IN	16 A
mm²/AWG/kcmil	

CCA

Nominal voltage UN	250 V
Nominal current IN	16 A
mm²/AWG/kcmil	

cULus Recognized

accessories

Test plug terminal block

Base strip - ICV 2,5 HC/ 2-G-5,08 - 1943535

accessories

RPS - 0201647



MPS-MT - 0201744



Coding element

CP-MSTB - 1734634



Insulating sleeve

MPS-IH WH - 0201663



MPS-IH RD - 0201676



Base strip - ICV 2,5 HC/ 2-G-5,08 - 1943535

accessories

MPS-IH BU - 0201689



MPS-IH YE - 0201692



MPS-IH GN - 0201702



MPS-IH BK - 0201731



Drawings

Base strip - ICV 2,5 HC/ 2-G-5,08 - 1943535

Drilling diagram

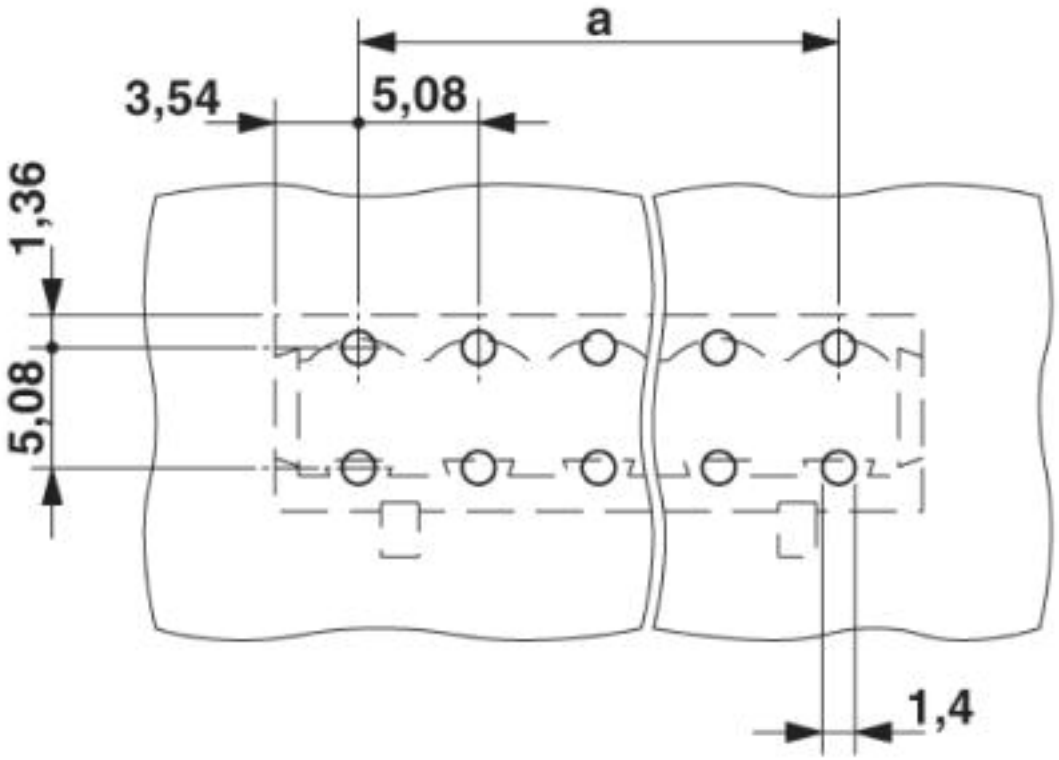

Base strip - ICV 2,5 HC/ 2-G-5,08 - 1943535

Dimensioned drawing

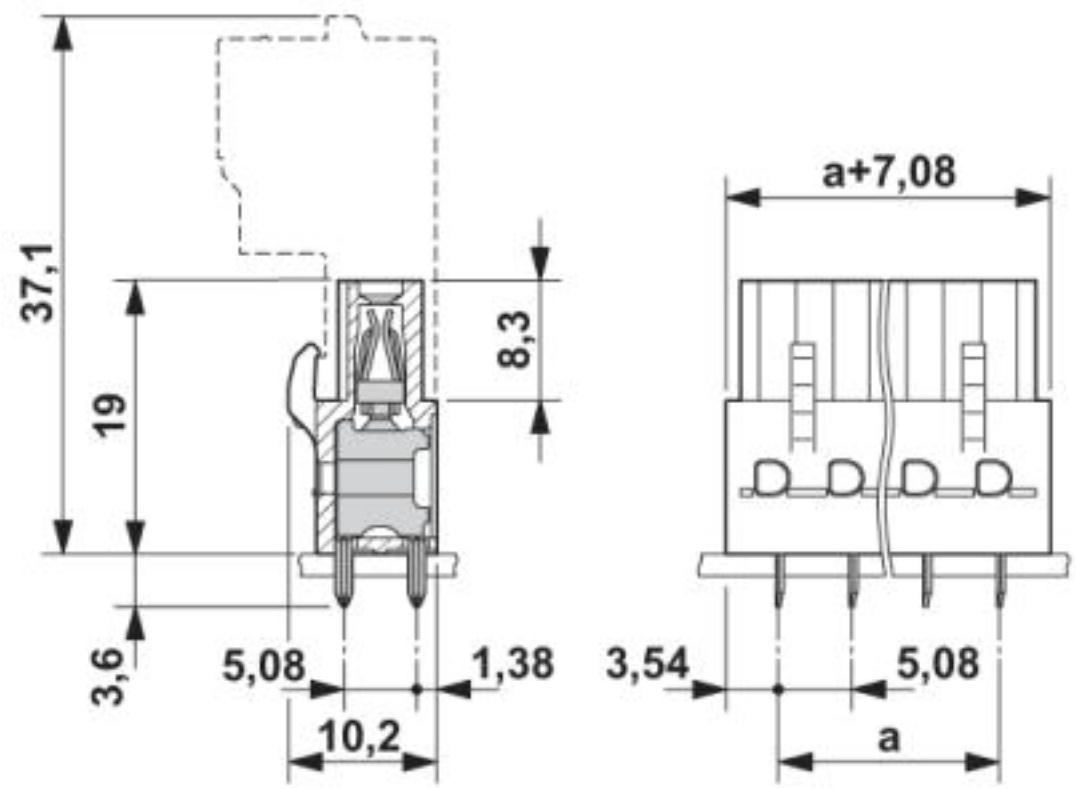

© Phoenix Contact 2013 - all rights reserved
http://www.phoenixcontact.com