Base strip - DFK-PC 4/ 3-G-7,62-FS4,8 - 1861167

Please be informed that the data shown in this PDF Document is generated from our Online Catalog. Please find the complete data in the user's documentation. Our General Terms of Use for Downloads are valid (http://download.phoenixcontact.com)



The figure shows a 5-pos. version of the product

Plug component, Nominal current: 15 A, Rated voltage (III/2): 400 V, Number of positions: 3, Pitch: 7.62 mm, Connection method: Solder/Slip-on connection, Color: green, Contact surface: Tin, Assembly: Direct mounting

Product Features

- Slip-on plug-in connection on the inside of the device (solder connection available on request)
- Can be plugged into PC 4 and PC 5 plugs
- Lateral mounting flanges (for screw set see accessories)
- Feed-through connectors for a panel thickness of 1 to 5 mm

Key commercial data

package_quantity	50
GTIN	4017918125684

Technical data

Dimensions

Pitch	7.62 mm
Dimension a	15.24 mm

General

Range of articles	DFK-PC 4/..-G -FS4,8
Insulating material group	I
Rated surge voltage (III/3)	6 kV
Rated surge voltage (III/2)	6 kV
Rated surge voltage (II/2)	6 kV
Rated voltage (III/3)	400 V
Rated voltage (III/2)	400 V
Rated voltage (II/2)	800 V
Connection in acc. with standard	EN-VDE
Nominal current I_N	15 A
Nominal cross section	4 mm²
Maximum load current	15 A
Insulating material	PA
Inflammability class according to UL 94	V2
Number of positions	3

Base strip - DFK-PC 4/ 3-G-7,62-FS4,8 - 1861167

Technical data

Connection data

Conductor cross section solid min.	0.2 mm²
Conductor cross section solid max.	4 mm²
Conductor cross section stranded min.	0.2 mm²
Conductor cross section stranded max.	4 mm²
Conductor cross section AWG/kcmil min.	24
Conductor cross section AWG/kcmil max	10

classifications

eCl@ss

eCl@ss 4.0	272607xx
eCl@ss 4.1	27260701
eCl@ss 5.0	27260701
eCl@ss 5.1	27141190
eCl@ss 6.0	27260704
eCl@ss 7.0	27440402
eCl@ss 8.0	27440402

ETIM

ETIM 3.0	EC001283
ETIM 4.0	EC001283
ETIM 5.0	EC001283

UNSPSC

UNSPSC 6.01	30211810
UNSPSC 7.0901	39121409
UNSPSC 11	39121409
UNSPSC 12.01	39121409
UNSPSC 13.2	39121409

approvals

CSA / UL Recognized / cUL Recognized / GOST / GOST / cULus Recognized /

Approval details

CSA

Usegroups	**B**	**C**
Nominal voltage UN	300 V	300 V
Nominal current IN	20 A	20 A
mm²/AWG/kcmil		

Base strip - DFK-PC 4/ 3-G-7,62-FS4,8 - 1861167

approvals

UL Recognized

Usegroups	B	C
Nominal voltage UN	300 V	300 V
Nominal current IN	20 A	20 A
mm²/AWG/kcmil		

cUL Recognized

Usegroups	B	C
Nominal voltage UN	300 V	300 V
Nominal current IN	20 A	20 A
mm²/AWG/kcmil		

GOST

cULus Recognized

accessories

Mounting material

DFK-MSTB-SS - 0708263



Coding element

Base strip - DFK-PC 4/ 3-G-7,62-FS4,8 - 1861167

accessories

CP-PC RD - 1701967



Labeled terminal marker

SK 7,62/3,8:FORTL.ZAHLEN - 0804549



Screwdriver tools

SZS 0,6X3,5 - 1205053



Drawings

Base strip - DFK-PC 4/ 3-G-7,62-FS4,8 - 1861167

Diagram

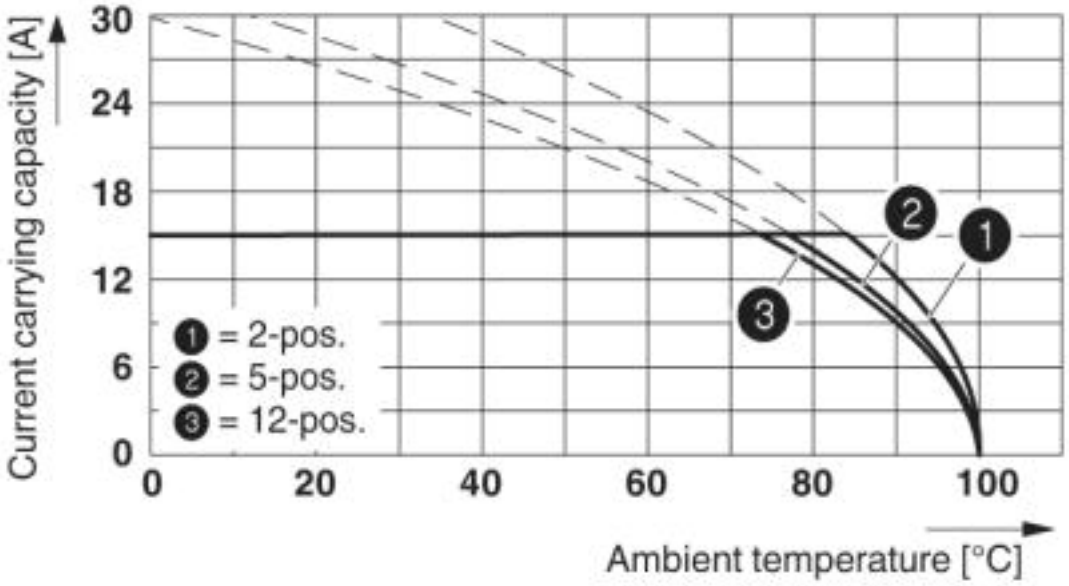

Derating curve for: PC 4/..-ST-7,62 with DFK-PC 4/..-G-7,62-FS4,8

Dimensioned drawing

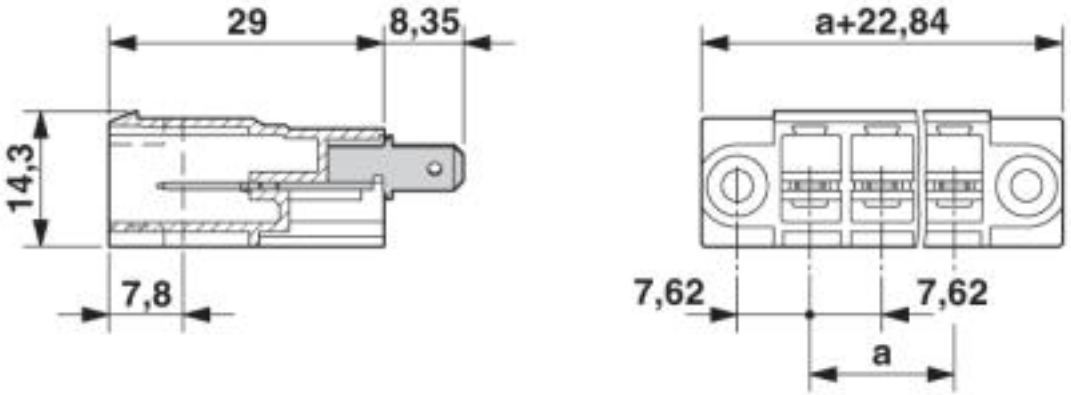

Base strip - DFK-PC 4/ 3-G-7,62-FS4,8 - 1861167

Dimensioned drawing

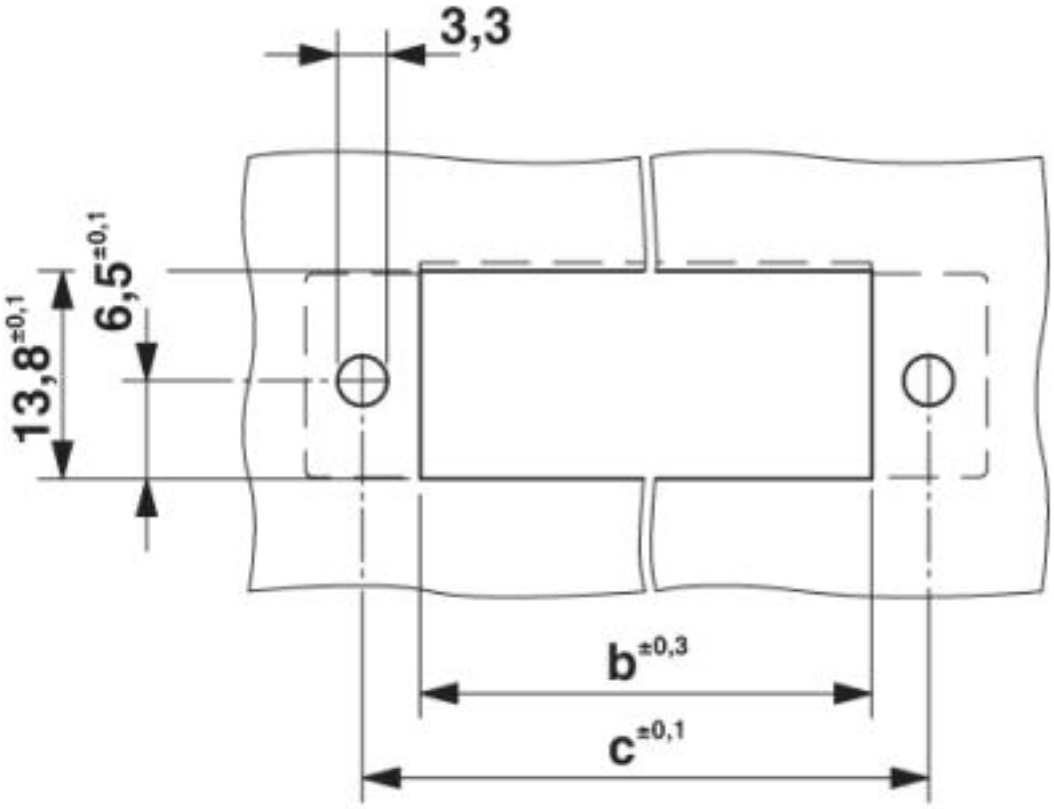

© Phoenix Contact 2013 - all rights reserved
http://www.phoenixcontact.com