Base strip - MSTBVA 2,5 HC/ 6-G-5,08 - 1924347

Please be informed that the data shown in this PDF Document is generated from our Online Catalog. Please find the complete data in the user's documentation. Our General Terms of Use for Downloads are valid (http://download.phoenixcontact.com)



The figure shows a 10-position version of the product

Header, Nominal current: 16 A, Rated voltage (III/2): 320 V, Number of positions: 6, Pitch: 5.08 mm, Color: green, Contact surface: Tin, Assembly: Soldering

Product Features

- 16 A (HC) headers in horizontal and vertical (MSTBV) versions
- Lateral HC marking („High Current“)
- Coding sections (CR) as protection against mismatching
- Vibration-resistant connection by means of threaded flange (-GF)
- Lateral mismatching prevented by side panels

Key commercial data

package_quantity	50
GTIN	4017918600426

Technical data

Dimensions

Length	8.6 mm
Pitch	5.08 mm
Dimension a	25.4 mm
Pin dimensions	1 x 1 mm
Pin spacing	5.00 mm
Hole diameter	1.4 mm

General

Range of articles	MSTBVA 2,5 HC/..-G
Insulating material group	I
Rated surge voltage (III/3)	4 kV
Rated surge voltage (III/2)	4 kV
Rated surge voltage (II/2)	4 kV
Rated voltage (III/3)	250 V
Rated voltage (III/2)	320 V
Rated voltage (II/2)	400 V
Connection in acc. with standard	EN-VDE
Nominal current I_N	16 A (see derating curve)

Base strip - MSTBVA 2,5 HC/ 6-G-5,08 - 1924347

Technical data

General

Maximum load current	16 A
Insulating material	PA
Inflammability class according to UL 94	V0
Color	green
Number of positions	6

classifications

eCl@ss

eCl@ss 4.0	272607xx
eCl@ss 4.1	27260701
eCl@ss 5.0	27260701
eCl@ss 5.1	27260701
eCl@ss 6.0	27260704
eCl@ss 7.0	27440402
eCl@ss 8.0	27440402

ETIM

ETIM 3.0	EC001121
ETIM 4.0	EC002637
ETIM 5.0	EC002637

UNSPSC

UNSPSC 6.01	30211810
UNSPSC 7.0901	39121409
UNSPSC 11	39121409
UNSPSC 12.01	39121409
UNSPSC 13.2	39121409

approvals

UL Recognized / VDE Gutachten mit Fertigungsüberwachung / cUL Recognized / GOST / IECEE CB Scheme / GOST / CCA / cULus Recognized /

Approval details

UL Recognized

Usegroups	**B**	**D**
Nominal voltage UN	300 V	300 V
Nominal current IN	16 A	10 A
mm²/AWG/kcmil		

Base strip - MSTBVA 2,5 HC/ 6-G-5,08 - 1924347

approvals

VDE Gutachten mit Fertigungsüberwachung

Nominal voltage UN	250 V
Nominal current IN	16 A
mm²/AWG/kcmil	

cUL Recognized

Usegroups	B	D
Nominal voltage UN	300 V	300 V
Nominal current IN	16 A	10 A
mm²/AWG/kcmil		

GOST

IECEE CB Scheme

Nominal voltage UN	250 V
Nominal current IN	16 A
mm²/AWG/kcmil	

CCA

Nominal voltage UN	250 V
Nominal current IN	16 A
mm²/AWG/kcmil	

cULus Recognized

Base strip - MSTBVA 2,5 HC/ 6-G-5,08 - 1924347

accessories

Coding element

CR-MSTB - 1734401



Labeled terminal marker

SK 5,08/3,8:FORTL.ZAHLEN - 0804293



Filler plug

MSTB-BL - 1755477



Drawings

Base strip - MSTBVA 2,5 HC/ 6-G-5,08 - 1924347

Drilling diagram

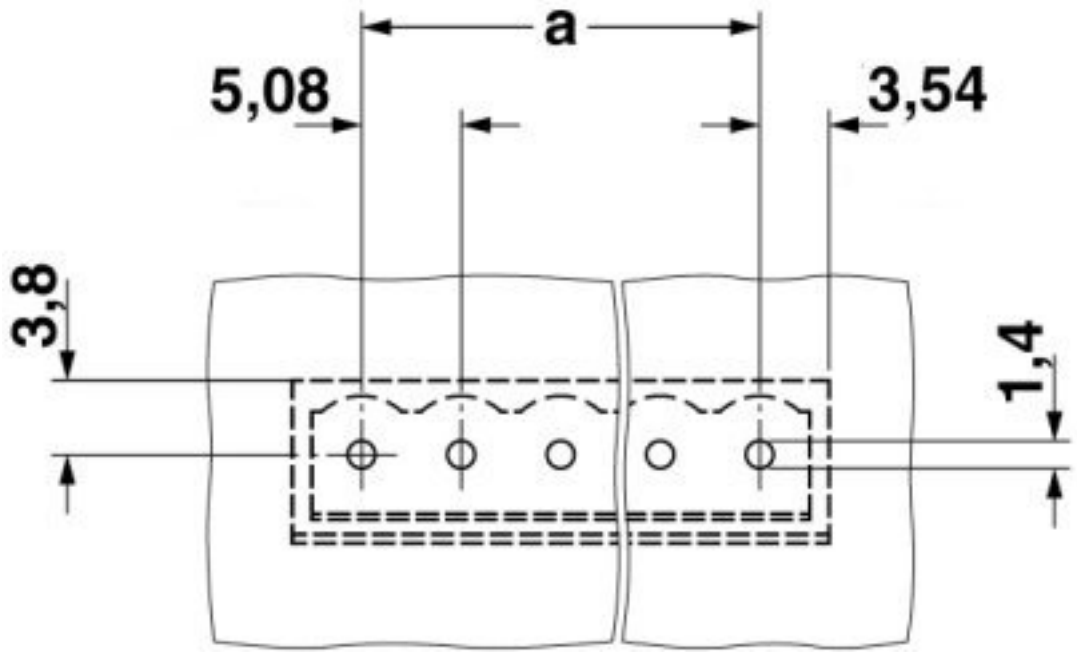

Dimensioned drawing

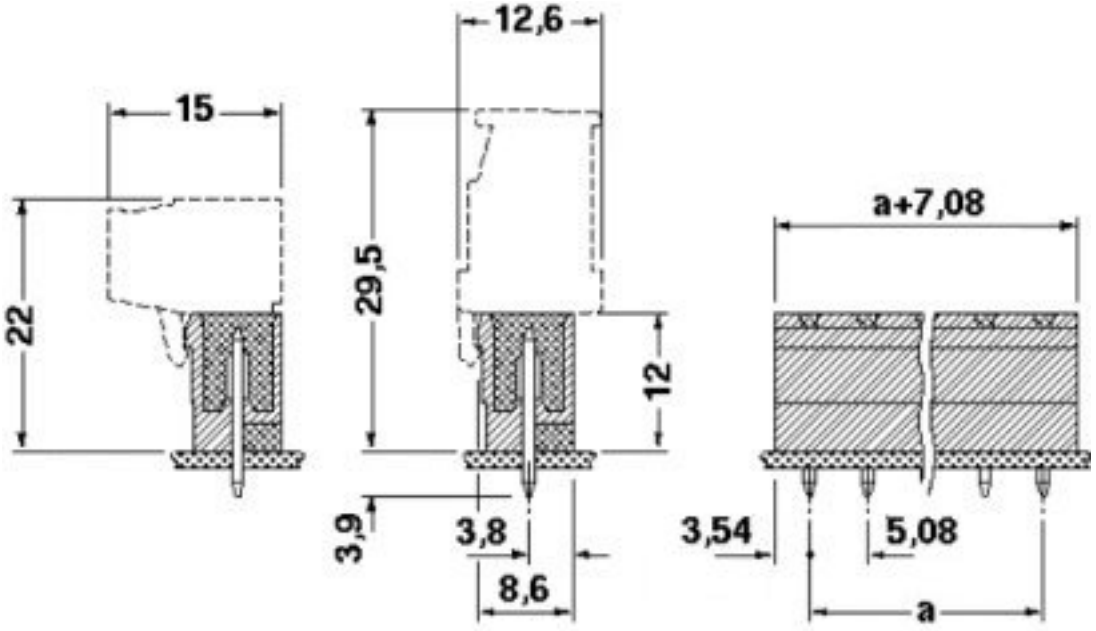

© Phoenix Contact 2013 - all rights reserved
http://www.phoenixcontact.com