Base strip - DFK-PC 4/ 9-GF-7,62 - 1840625

Please be informed that the data shown in this PDF Document is generated from our Online Catalog. Please find the complete data in the user's documentation. Our General Terms of Use for Downloads are valid (http://download.phoenixcontact.com)



The figure shows a 5-pos. version of the product

Plug component, Nominal current: 20 A, Rated voltage (III/2): 630 V, Number of positions: 9, Pitch: 7.62 mm, Connection method: Screw connection, Color: green, Contact surface: Tin, Assembly: Direct mounting

Product Features

- Can be plugged into PC 4 and PC 5 plugs
- Screw connection on the inside of the device
- Lateral mounting flanges (for screw set see accessories)
- Can be mounted from outside or prewired and mounted from inside
- Feed-through connectors for a panel thickness of 1 to 5 mm

Key commercial data

package_quantity	50
GTIN	4017918111779

Technical data

Dimensions

Pitch	7.62 mm
Dimension a	60.96 mm

General

Range of articles	DFK-PC 4/..-GF
Insulating material group	I
Rated surge voltage (III/3)	6 kV
Rated surge voltage (III/2)	6 kV
Rated surge voltage (II/2)	6 kV
Rated voltage (III/3)	400 V
Rated voltage (III/2)	630 V
Rated voltage (II/2)	1000 V
Connection in acc. with standard	EN-VDE
Nominal current I_N	20 A
Nominal cross section	4 mm²
Maximum load current	20 A
Insulating material	PA
Inflammability class according to UL 94	V0

Base strip - DFK-PC 4/ 9-GF-7,62 - 1840625

Technical data

General

Internal cylindrical gage	A4
Stripping length	7 mm
Number of positions	9
Screw thread	M3
Tightening torque, min	0.5 Nm
Tightening torque max	0.6 Nm

Connection data

Conductor cross section solid min.	0.2 mm²
Conductor cross section solid max.	4 mm²
Conductor cross section stranded min.	0.2 mm²
Conductor cross section stranded max.	4 mm²
Conductor cross section stranded, with ferrule without plastic sleeve min.	0.25 mm²
Conductor cross section stranded, with ferrule without plastic sleeve max.	4 mm²
Conductor cross section stranded, with ferrule with plastic sleeve min.	0.25 mm²
Conductor cross section stranded, with ferrule with plastic sleeve max.	4 mm²
Conductor cross section AWG/kcmil min.	24
Conductor cross section AWG/kcmil max	10
2 conductors with same cross section, solid min.	0.2 mm²
2 conductors with same cross section, solid max.	2.5 mm²
2 conductors with same cross section, stranded min.	0.2 mm²
2 conductors with same cross section, stranded max.	2.5 mm²
2 conductors with same cross section, stranded, ferrules without plastic sleeve, min.	0.2 mm²
2 conductors with same cross section, stranded, ferrules without plastic sleeve, max.	1.5 mm²
2 conductors with same cross section, stranded, TWIN ferrules with plastic sleeve, min.	0.5 mm²
2 conductors with same cross section, stranded, TWIN ferrules with plastic sleeve, max.	2.5 mm²
Minimum AWG according to UL/CUL	30
Maximum AWG according to UL/CUL	10

classifications

eCl@ss

eCl@ss 4.0	272607xx
eCl@ss 4.1	27260701
eCl@ss 5.0	27260701
eCl@ss 5.1	27141190
eCl@ss 6.0	27260704

Base strip - DFK-PC 4/ 9-GF-7,62 - 1840625

classifications

eCl@ss

eCl@ss 7.0	27440402
eCl@ss 8.0	27440402

ETIM

ETIM 3.0	EC001283
ETIM 4.0	EC001283
ETIM 5.0	EC001283

UNSPSC

UNSPSC 6.01	30211810
UNSPSC 7.0901	39121409
UNSPSC 11	39121409
UNSPSC 12.01	39121409
UNSPSC 13.2	39121409

approvals

CSA / UL Recognized / cUL Recognized / GOST / LR / GL / DNV / GOST / cULus Recognized /

Approval details

CSA

Usegroups	**B**	**C**
Nominal voltage UN	300 V	300 V
Nominal current IN	20 A	20 A
mm²/AWG/kcmil	28-10	28-10

UL Recognized

Usegroups	**B**	**C**	**D**
Nominal voltage UN	300 V	300 V	600 V
Nominal current IN	35 A	35 A	5 A
mm²/AWG/kcmil	30-10	30-10	30-10

cUL Recognized

Usegroups	**B**	**C**	**D**
Nominal voltage UN	300 V	300 V	600 V
Nominal current IN	35 A	35 A	5 A

Base strip - DFK-PC 4/ 9-GF-7,62 - 1840625

approvals

Usegroups	B	C	D
mm²/AWG/kcmil	30-10	30-10	30-10

GOST

LR	
Nominal voltage UN	400 V
Nominal current IN	20 A
mm²/AWG/kcmil	4

GL	
Nominal voltage UN	400 V
Nominal current IN	20 A
mm²/AWG/kcmil	

DNV

cULus Recognized

accessories

Mounting material

DFK-MSTB-SS - 0708263



Coding element

Base strip - DFK-PC 4/ 9-GF-7,62 - 1840625

accessories

CP-PC RD - 1701967



Labeled terminal marker

SK 7,62/3,8:FORTL.ZAHLEN - 0804549



Screwdriver tools

SZS 0,6X3,5 - 1205053



Drawings

Base strip - DFK-PC 4/ 9-GF-7,62 - 1840625

Diagram

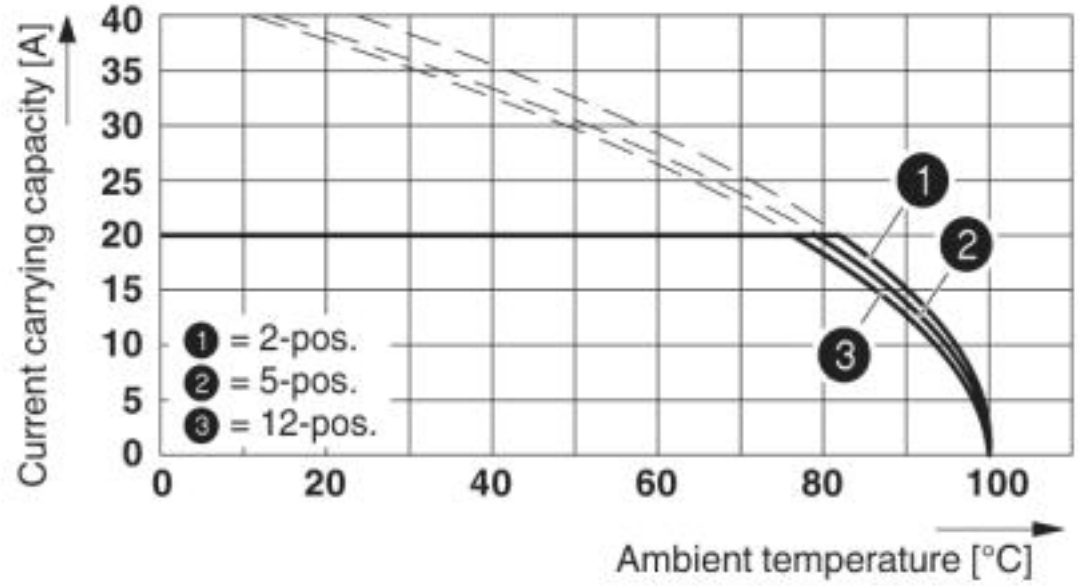

Derating curve for: PC 4/..-ST-7,62 with DFK-PC 4/..-GF-7,62

Dimensioned drawing

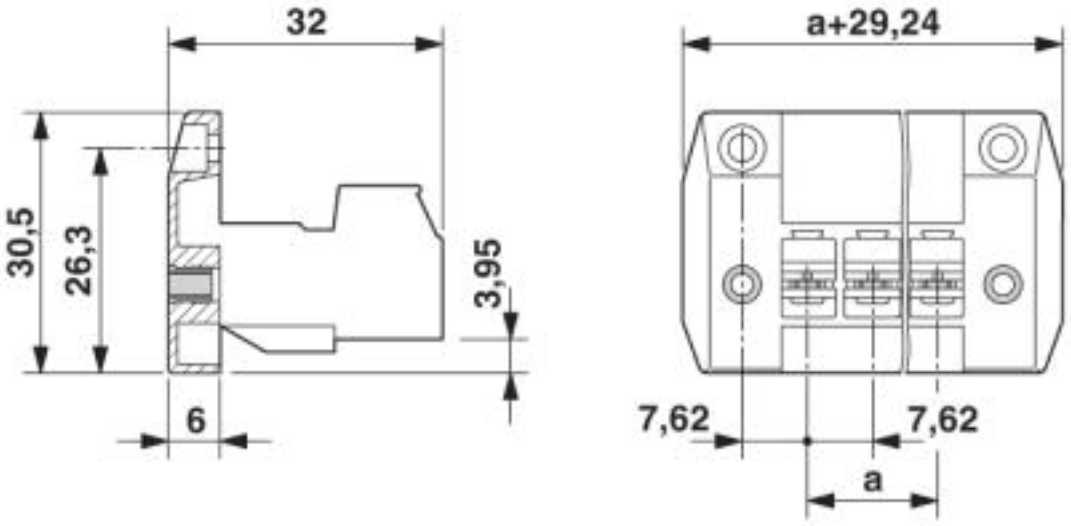

Base strip - DFK-PC 4/ 9-GF-7,62 - 1840625

Dimensioned drawing

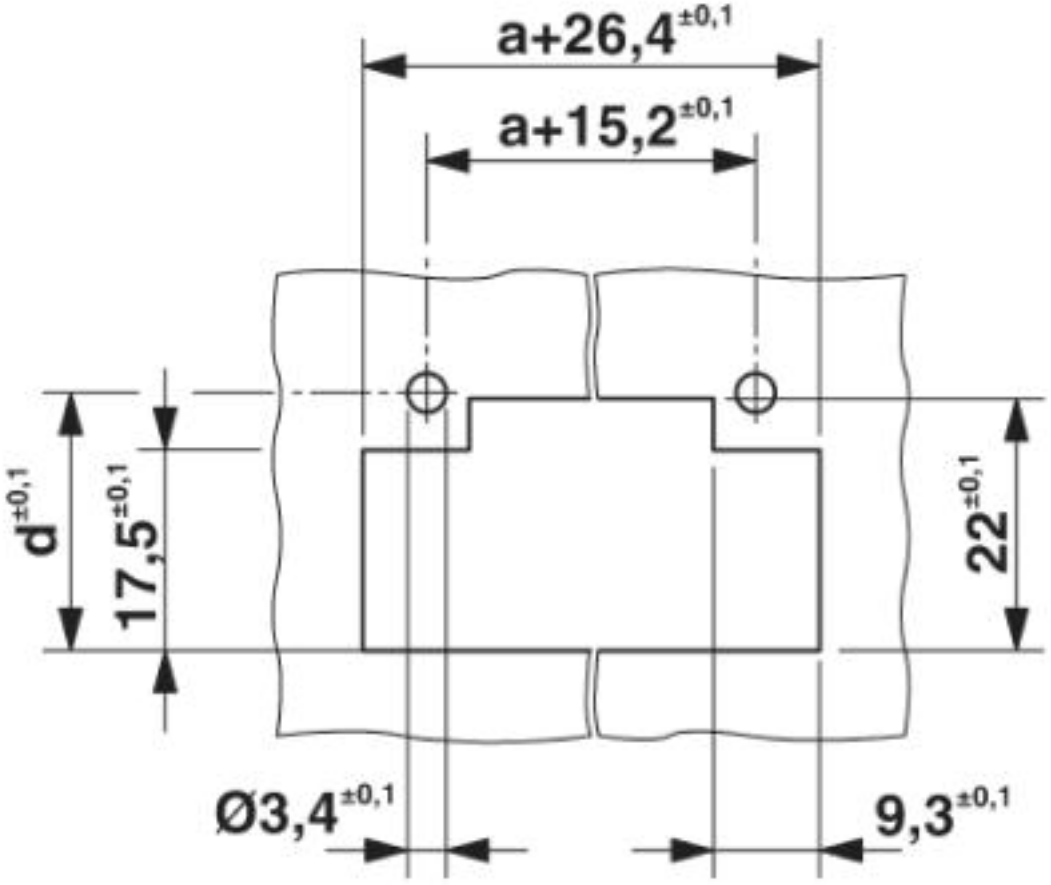

Dimension d depending on the wall thickness (W) in mm: W=1: d=21.4W=2: d=21.9W=3: d=22.5W=4: d=23.1W=5: d=23.7

© Phoenix Contact 2013 - all rights reserved
http://www.phoenixcontact.com