SAIL-M12WM12W-4-0.6U

Weidmüller Interface GmbH & Co. KG
Klingenbergstraße 16
D-32758 Detmold
Germany
Fon: +49 5231 14-0
Fax: +49 5231 14-292083
www.weidmueller.com



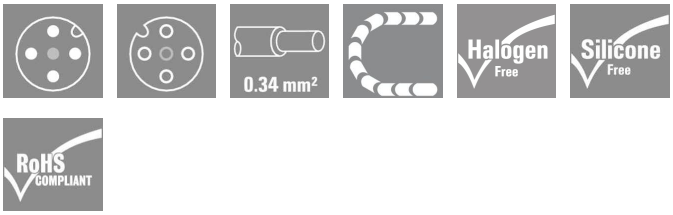

Sensor/actuator cables are used for wiring sensors and actuators and for transmitting data or power in various applications. The moulded cable offers connected and tested connection of the plug-in connector to the cable ex-works. The cables may be exposed to a wide range of conditions, such as humidity, dust, heat, cold, shock or vibration.
Our developers have focused specifically on this issue and designed a host of different M8 and M12 sensor-actuator cables so you are bound to find the solution you need for your application.
Is there something you have not managed to find or you feel needs explanation? Talk to us!

General ordering data

Type	SAIL-M12WM12W-4-0.6U
Order No.	1906310060
Version	Sensor/actuator line, Connecting line, M12 / M12, No. of poles: 4, 0.6 m, pin, 90° - socket 90°, shielded: No, LED: No, Sheath material: PUR, Halogen: No
GTIN (EAN)	4032248744909
Qty.	1 pc(s).

SAIL-M12WM12W-4-0.6U

Weidmüller Interface GmbH & Co. KG
Klingenbergstraße 16
D-32758 Detmold
Germany
Fon: +49 5231 14-0
Fax: +49 5231 14-292083
www.weidmueller.com

Technische Daten

Dimensions and weights

Net weight	56 g

Technical specifications for cable

No. of poles	4	Core cross-section	0.34 mm²
shielded	No	Insulation	TPM
Colour coding	Brown, White, Blue, Black	Sheath material	PUR
Sheathing colour	Black	Outer diameter	4.7 ± 0.2 mm
Cable length	0.6 m	Temperature range, moving, min.	-25 °C
Temperature range, moving, max.	80 °C	Temperature range, stationary, min.	-40 °C
Temperature range, stationary, max.	80 °C	Halogen	No
Suitable for cable carriers	Yes	Torsion resistance	180 °/m
Bending radius, min., stationary	5 x cable diameter	Bending radius, min., moving	10 x cable diameter
Acceleration	5 m/s²	Speed	200 m/min
Bending cycles	5 Mio	Resistant to welding beads	No

General technical data

Version	pin, 90° - socket 90°	Contact tube diameter	M12 / M12
Housing main material	PUR	Threaded ring material	Brass, nickel-plated
Coding	A	Protection degree	IP 65, IP 66, IP 67, IP 68, (when screwed in)
Contact surface	Gold-plated	LED	No
Rated voltage	250 V	Rated current	4 A
Insulation resistance	10^8 Ω	Temperature range of housing	-25...+85 °C
Tightening torque	M12: 0.8 - 1.2 Nm	Plugging cycles	≥ 100
Pollution severity	3	jumpered	No

Classifications

ETIM 3.0	EC001855	UNSPSC	30-21-18-01
eClass 5.1	27-06-91-90	eClass 6.2	27-06-91-90
eClass 7.1	27-06-91-90		

Approvals

Approvals	c UL us LISTED
ROHS	Conform

SAIL-M12WM12W-4-0.6U

Weidmüller Interface GmbH & Co. KG
Klingenbergstraße 16
D-32758 Detmold
Germany
Fon: +49 5231 14-0
Fax: +49 5231 14-292083
www.weidmueller.com

Zeichnungen

Dimensioned drawing

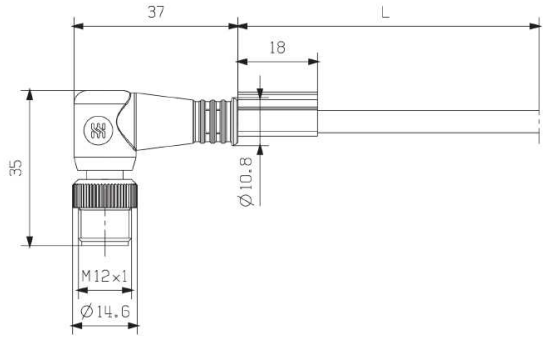

Dimensioned drawing

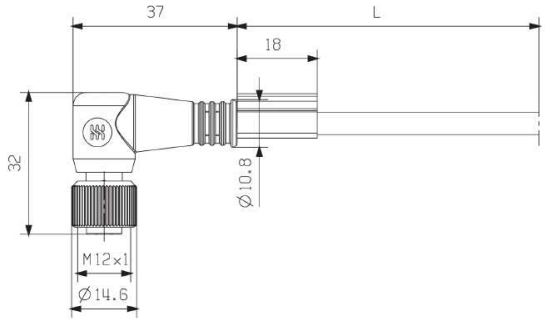

Pole scheme

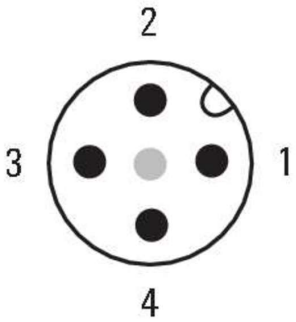

Pole scheme

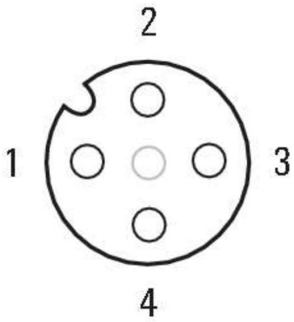

Wiring diagram

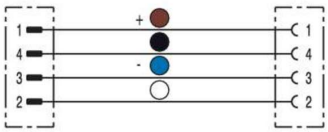

The ideal tool, the Screwty® with torque function



Light, securely screwed-in round plug-in connectors. Screwty set DM / VPE: 1 / Order No.: 1920000000 Adapters: M12, M12 F, M8, M8 F