OMNIMATE Signal - series LL
LL 5.08/11/90 3.2SN OR BX

Weidmüller Interface GmbH & Co. KG
Klingenbergstraße 16
D-32758 Detmold
Germany
Fon: +49 5231 14-0
Fax: +49 5231 14-292083
www.weidmueller.com



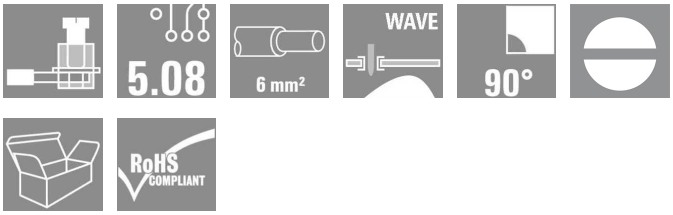

This PCB terminal provides connections for 32 A and 6 mm² conductor cross-section with the proven clamping-yoke connection, in 5.00 and 5.08 mm pitch. 90° conductor outlet direction.

- 0.20 - 6.0mm² (IEC) / 26 - 12 AWG (UL)
- 500 V (IEC) / 300 V (UL)
- 32 A (IEC) / 20 A (UL)

General ordering data

Type	LL 5.08/11/90 3.2SN OR BX
Order No.	1001920000
Version	PCB terminal, 5.08 mm, No. of poles: 11, 90°, Solder pin length (l): 3.2 mm, tinned, Orange, Clamping yoke connection, Clamping range, rated connection, max.: 6 mm², Box
GTIN (EAN)	4032248693887
Qty.	50 pc(s).
Product data	IEC: 500 V / 32.5 A / 0.5 - 6 mm² UL: 300 V / 20 A / AWG 28 - AWG 12
Packaging	Box

Erstellungs-Datum December 13, 2013 10:36:32 AM CET

OMNIMATE Signal - series LL
LL 5.08/11/90 3.2SN OR BX

Weidmüller Interface GmbH & Co. KG
Klingenbergstraße 16
D-32758 Detmold
Germany
Fon: +49 5231 14-0
Fax: +49 5231 14-292083
www.weidmueller.com

Technische Daten

Dimensions and weights

Net weight	20 g

System characteristics

Product family	OMNIMATE Signal - series LL	Wire connection method	Clamping yoke connection
Mounting onto the PCB	Solder connection	Conductor outlet direction	90°
Pitch in mm (P)	5.08 mm	Pitch in inches (P)	0.2 inch
No. of poles	11	Fitted by customer	Yes
Max. adjacent poles per row	24	Solder pin length (l)	3.2 mm
Solder eyelet hole diameter (D)	1.3 mm	Solder eyelet hole diameter tolerance (D)	+ 0,1 mm
Number of solder pins per pole	1	Screwdriver blade	0.6 x 3.5
Screwdriver blade standard	DIN 5264	Tightening torque, min.	0.5 Nm
Tightening torque, max.	0.6 Nm	Clamping screw	M 3
Stripping length	6 mm	L1 in mm	50.8 mm
L1 in inches	2 inch	Touch-safe protection acc. to DIN VDE 0470	IP 20
Touch-safe protection acc. to DIN VDE 57 106	Safe from finger touch		

Material data

Insulating material	Wemid (PA)	Colour	Orange
UL 94 flammability rating	V-0	CTI	≥ 600
Contact material	Cu-Leg	Contact surface	tinned
Contact base material	Cu-Leg		

Connectable conductors

Clamping range, rated connection, min.	0.08 mm²	Clamping range, rated connection, max.	6 mm²
Wire connection cross section AWG, min.	AWG 26	Wire connection cross section AWG, max.	AWG 12
Solid, min. H05(07) V-U	0.5 mm²	Solid, max. H05(07) V-U	6 mm²
Flexible, min. H05(07) V-K	0.5 mm²	Flexible, max. H05(07) V-K	4 mm²
w. wire end ferrule, DIN 46228 pt 1, min	0.5 mm²	w. wire end ferrule, DIN 46228 pt 1, max.	2.5 mm²
w. plastic collar ferrule, DIN 46228 pt 4, min.	0.5 mm²	w. plastic collar ferrule, DIN 46228 pt 4, max.	2.5 mm²
Plug gauge acc. to EN 60999 a x b; Ø	2.8 mm x 2.4 mm; 3.0 mm		

DIN IEC rating data

Rated current, min. no. of poles (TU=20°C)	32.5 A	Rated current, max. no. of poles (Tu=20°C)	26 A
Rated current, number of poles (Tu=40°C), min	27.5 A	Rated current, number of poles (Tu=40°C), max.	22 A
Rated voltage for surge voltage class pollution degree II/2	500 V	Rated voltage for surge voltage class pollution degree III/2	320 V
Rated voltage for surge voltage class pollution degree III/3	250 V	Rated impulse voltage for surge voltage classpollution degree II/2	4 kV
Rated impulse voltage for surge voltage classpollution degree III/2	4 kV	Rated impulse voltage for surge voltage classcontamination degree III/3	4 kV
Short-time withstand current resistance	3 x 1s with 120 A		

OMNIMATE Signal - series LL
LL 5.08/11/90 3.2SN OR BX

Weidmüller Interface GmbH & Co. KG
Klingenbergstraße 16
D-32758 Detmold
Germany
Fon: +49 5231 14-0
Fax: +49 5231 14-292083
www.weidmueller.com

Technische Daten

CSA rating data

Institute (CSA)		Rated voltage (Use group B)	300 V
Rated current (use group B)	20 A	Rated voltage (use group D)	300 V
Rated current (use group D)	10 A	Wire cross-section, AWG, min.	AWG 28
Wire cross-section, AWG, max.	AWG 12		

UL 1059 rating data

Institute (UR)		Rated voltage (use group B)	300 V
Rated current (use group B)	20 A	Rated voltage (use group D)	300 V
Rated current (use group D)	10 A	Wire cross-section, AWG, min.	AWG 28
Wire cross-section, AWG, max.	AWG 12		

Classifications

ETIM 3.0	EC001284	UNSPSC	30-21-18-01
eClass 6.2	27-26-11-01	eClass 7.1	27-44-04-01

Notes

Notes

- Rated current related to rated cross-section & min. No. of poles.
- Wire end ferrule without plastic collar to DIN 46228/1
- Wire end ferrule with plastic collar to DIN 46228/4
- P on drawing = pitch
- Rated data refer only to the component itself. Clearance and creepage distances to other components are to be designed in accordance with the relevant application standards.

Approvals

Approvals

ROHS	Conform

OMNIMATE Signal - series LL
LL 5.08/11/90 3.2SN OR BX

Weidmüller Interface GmbH & Co. KG
Klingenbergstraße 16
D-32758 Detmold
Germany
Fon: +49 5231 14-0
Fax: +49 5231 14-292083
www.weidmueller.com

Zeichnungen

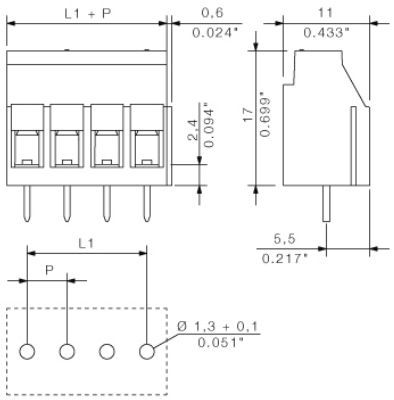

LL 5.00/../90

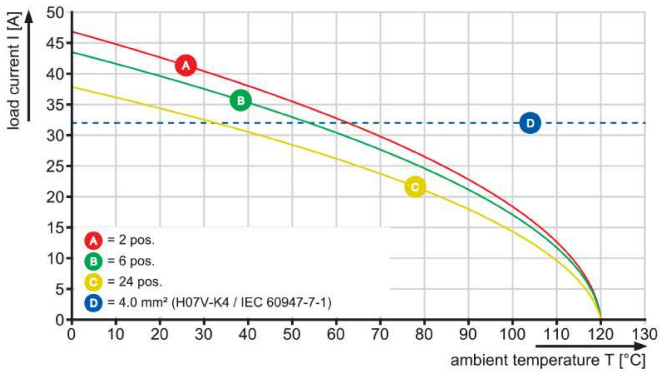

LL 5.00/../90

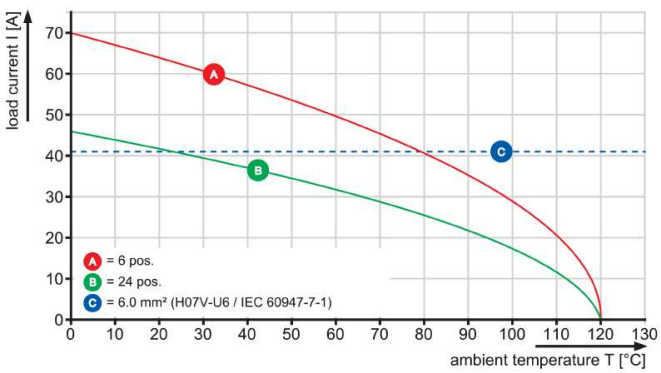

LL 5.08/../90

