# OMNIMATE Signal - series RSV
# RSV1,6 S18 GR

**Weidmüller Interface GmbH & Co. KG**
Klingenbergstraße 16
D-32758 Detmold
Germany
Fon: +49 5231 14-0
Fax: +49 5231 14-292083
www.weidmueller.com



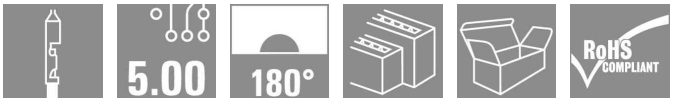


Rectangular plug-in connector for use with crimp contacts. Can be used as universal coupling, but also with the PCB variations. The crimp contacts guarantee a high connection density. CS 1.6 or CB 1.6 contacts can be used here. The plug-in connectors can be coded and locked to the mating connector. Supplied in cardboard box.

- 0.13 - 3.31 mm² (IEC) / 26 - 12 AWG (UL)
- 630 V (IEC) / 600 V (UL)
- 17 A (IEC) / 10 A (UL)

## General ordering data

| | |
|---|---|
| Type | RSV1,6 S18 GR |
| Order No. | 1417100000 |
| Version | PCB plug-in connector, male plug, 5.00 mm, No. of poles: 18, Crimp connection, Clamping range, rated connection, max.: 3.31 mm², Box |
| GTIN (EAN) | 4008190103361 |
| Qty. | 25 pc(s). |
| Product data | IEC: 630 V / 17 A<br>UL: 600 V / 10 A / AWG 26 - AWG 12 |
| Packaging | Box |

Erstellungs-Datum January 13, 2014 8:56:27 AM CET

# OMNIMATE Signal - series RSV
# RSV1,6 S18 GR

**Weidmüller Interface GmbH & Co. KG**
Klingenbergstraße 16
D-32758 Detmold
Germany
Fon: +49 5231 14-0
Fax: +49 5231 14-292083
www.weidmueller.com

## Technische Daten

### Dimensions and weights

| | |
|---|---|
| Net weight | 16.83 g |

### System parameters

| | | | |
|---|---|---|---|
| Product family | OMNIMATE Signal - series RSV | Wire connection method | Crimp connection |
| Pitch in mm (P) | 5 mm | Pitch in inches (P) | 0.197 inch |
| No. of poles | 18 | Stripping length | 4 mm |
| L1 in mm | 25 mm | L1 in inches | 0.984 inch |
| Touch-safe protection acc. to DIN VDE 0470 | IP20 plugged | Touch-safe protection acc. to DIN VDE 57 106 | Safe from finger touch, plugged |

### Material data

| | | | |
|---|---|---|---|
| Insulating material | Wemid (PA) | Colour | Pebble grey |
| Colour chart (similar) | RAL 7032 | UL 94 flammability rating | V-0 |
| CTI | ≥ 600 | Contact material | Cu-Leg |

### Connectable conductors

| | | | |
|---|---|---|---|
| Clamping range, rated connection, min. | 0.13 mm² | Clamping range, rated connection, max. | 3.31 mm² |
| Flexible, min. H05(07) V-K | 0.2 mm² | Flexible, max. H05(07) V-K | 2.5 mm² |

### DIN IEC rating data

| | | | |
|---|---|---|---|
| Rated current, min. no. of poles (TU=20°C) | 17 A | Rated current, max. no. of poles (Tu=20°C) | 13 A |
| Rated current, number of poles (Tu=40°C), min | 15 A | Rated current, number of poles (Tu=40°C), max. | 11.5 A |
| Rated voltage for surge voltage class pollution degree II/2 | 630 V | Rated voltage for surge voltage class pollution degree III/2 | 400 V |
| Rated voltage for surge voltage class pollution degree III/3 | 250 V | Rated impulse voltage for surge voltage classpollution degree II/2 | 4 kV |
| Rated impulse voltage for surge voltage classpollution degree III/2 | 4 kV | Rated impulse voltage for surge voltage classcontamination degree III/3 | 4 kV |
| Short-time withstand current resistance | 3 x 1s with 120 A | | |

### CSA rating data

| | | | |
|---|---|---|---|
| Institute (CSA) | | Rated voltage (Use group C) | 600 V |
| Rated current (use group C) | 13 A | Wire cross-section, AWG, min. | AWG 26 |
| Wire cross-section, AWG, max. | AWG 12 | | |

### UL 1059 rating data

Institute (UR)

# OMNIMATE Signal - series RSV
# RSV1,6 S18 GR

**Weidmüller Interface GmbH & Co. KG**
Klingenbergstraße 16
D-32758 Detmold
Germany
Fon: +49 5231 14-0
Fax: +49 5231 14-292083
www.weidmueller.com

## Technische Daten

### Classifications

| | | | |
|---|---|---|---|
| ETIM 3.0 | EC001284 | UNSPSC | 30-21-18-10 |
| eClass 5.1 | 27-26-07-01 | eClass 6.2 | 27-26-07-03 |
| eClass 7.1 | 27-44-01-01 | | |

### Notes

| | |
|---|---|
| Notes | • Additional colours on request<br>• Rated current related to rated cross-section & min. No. of poles.<br>• Spacing between rows: see hole layout<br>• Rated cross-section depends on crimp contact used.<br>• Rated data refer only to the component itself. Clearance and creepage distances to other components are to be designed in accordance with the relevant application standards.<br>• Max. outer diameter of the cable (with insulation): 3.5 mm |

### Approvals

| | |
|---|---|
| Approvals | ME25 |
| ROHS | Conform |

### Downloads

| | |
|---|---|
| CAD Library (P-CAD Format - ASCII) | RSV1.6.zip |
| CAD Library (P-CAD Format - Standard) | RSV1.6.zip |
| 3D Modell | |

# OMNIMATE Signal - series RSV
# RSV1,6 S18 GR

**Weidmüller Interface GmbH & Co. KG**
Klingenbergstraße 16
D-32758 Detmold
Germany
Fon: +49 5231 14-0
Fax: +49 5231 14-292083
www.weidmueller.com

## Zeichnungen

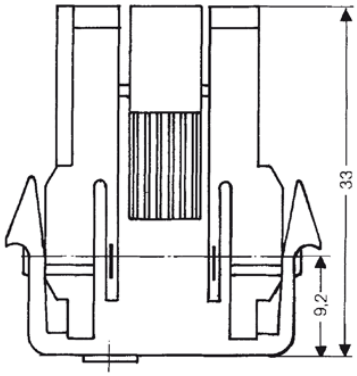


RSV1.6 CB.. - RSV1.6 CS..

