ITEM	302181	50016	PC	2	STRAIN RELIEF, MOLDING PVC BLACK		
	302162	50094	pc	2	RCA PLUG,NICKEL PLATED,MOLDING PVC OUTER/BLACK,INNER/RED,WHITE	P2	
	302195	50116					
	302321	50199	pc	2	RCA SOCKET,NICKEL PLATED,MOLDING PVC OUTER/BLACK,INNER/RED,WHITE	P1	
			mm	LENGTH	(10/0.1CCS+10/0.1CCS)*2F,OD:2.6*5.2, BLACK	CABLE	
			UNIT	Q'TY	DESCRIPTION	NAME	NO

(10/0.1CCS+10/0.1CCS)*2F,OD:2.6*5.2, BLACK

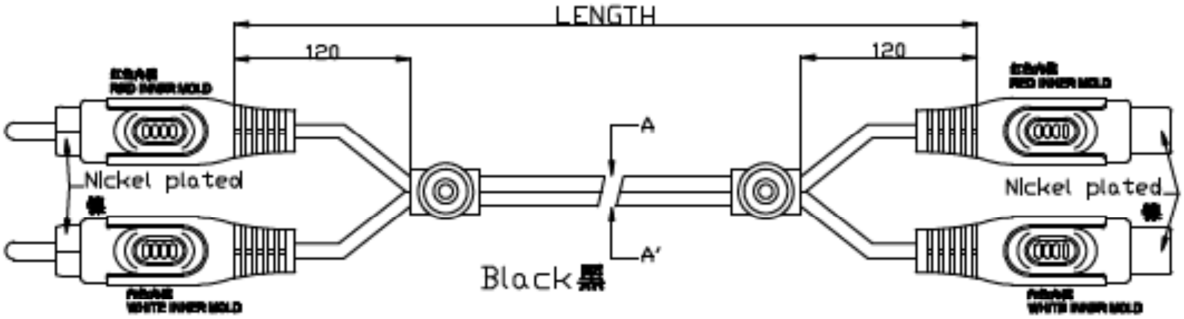

CABLE SEC:A-A'

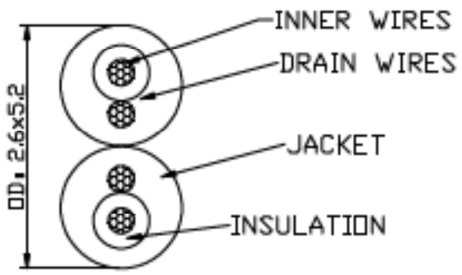

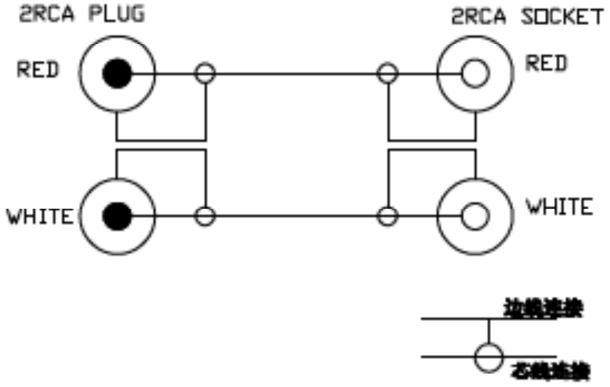

CONRAD EDP	VV EDP	LENGTH	PACKAGE
302181	50016	5000±1%	NT13
302162	50094	2500±1%	NT13
302195	50116	10000±1%	NT15
302321	50199	15000±1%	NT15