Weidmüller

OMNIMATE Signal - series LM
LM 3.50/05/90 3.2SN OR BX

Weidmüller Interface GmbH & Co. KG
Klingenbergstraße 16
D-32758 Detmold
Germany
Fon: +49 5231 14-0
Fax: +49 5231 14-292083
www.weidmueller.com



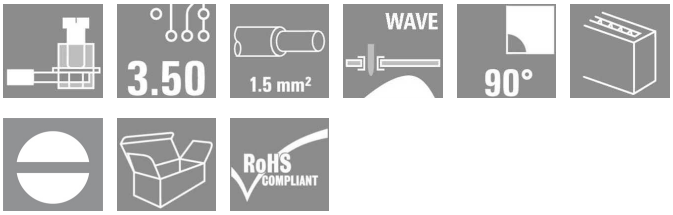

Small, compact PCB terminal or -tier PCB terminal with proven clamping yoke connection and 3.5 mm pitch. Suitable for conductor cross-sections up to 1.5 mm².
- 0.20 - 1.50 mm² (IEC) / 28 - 14 AWG (UL)
- 320 V (IEC) / 300 V (UL)
- 16 A (IEC) / 10 A (UL)

General ordering data

Type	LM 3.50/05/90 3.2SN OR BX
Order No.	1720250000
Version	PCB terminal, 3.50 mm, No. of poles: 5, 90°, Solder pin length (l): 3.2 mm, tinned, Orange, Clamping yoke connection, Clamping range, rated connection, max.: 2.08 mm², Box
GTIN (EAN)	4008190355142
Qty.	100 pc(s).
Product data	IEC: 320 V / 16 A / 0.5 - 1.5 mm² UL: 300 V / 10 A / AWG 28 - AWG 14
Packaging	Box

OMNIMATE Signal - series LM
LM 3.50/05/90 3.2SN OR BX

Weidmüller Interface GmbH & Co. KG
Klingenbergstraße 16
D-32758 Detmold
Germany
Fon: +49 5231 14-0
Fax: +49 5231 14-292083
www.weidmueller.com

Technische Daten

Dimensions and weights

Net weight	3.12 g

System characteristics

Product family	OMNIMATE Signal - series LM	Wire connection method	Clamping yoke connection
Mounting onto the PCB	Solder connection	Conductor outlet direction	90°
Pitch in mm (P)	3.5 mm	Pitch in inches (P)	0.138 inch
No. of poles	5	Fitted by customer	Yes
Max. adjacent poles per row	24	Solder pin length (l)	3.2 mm
Solder eyelet hole diameter (D)	1.3 mm	Solder eyelet hole diameter tolerance (D)	+ 0,1 mm
Number of solder pins per pole	1	Screwdriver blade	0.4 x 2.5
Screwdriver blade standard	DIN 5264	Tightening torque, min.	0.2 Nm
Tightening torque, max.	0.25 Nm	Clamping screw	M 2
Stripping length	5 mm	L1 in mm	14 mm
L1 in inches	0.551 inch	Touch-safe protection acc. to DIN VDE 0470	IP 20
Touch-safe protection acc. to DIN VDE 57 106	Safe from finger touch		

Material data

Insulating material	PA	Colour	Orange
UL 94 flammability rating	V-2	CTI	≥ 600
Temperature of glow-wire test	750 °C	Duration of glow-wire test	30 s
Contact material	Cu-Leg	Contact surface	tinned
Contact base material	Cu-Leg		

Connectable conductors

Clamping range, rated connection, min.	0.08 mm²	Clamping range, rated connection, max.	2.08 mm²
Wire connection cross section AWG, min.	AWG 28	Wire connection cross section AWG, max.	AWG 14
Solid, min. H05(07) V-U	0.5 mm²	Solid, max. H05(07) V-U	1.5 mm²
Flexible, min. H05(07) V-K	0.5 mm²	Flexible, max. H05(07) V-K	1.5 mm²
w. plastic collar ferrule, DIN 46228 pt 4, min.	0.5 mm²	w. plastic collar ferrule, DIN 46228 pt 4, max.	0.75 mm²
Plug gauge acc. to EN 60999 a x b; Ø	2.4 mm x 1.5 mm		

DIN IEC rating data

Rated current, min. no. of poles (TU=20°C)	16 A	Rated current, max. no. of poles (Tu=20°C)	12 A
Rated current, number of poles (Tu=40°C), min	14 A	Rated current, number of poles (Tu=40°C), max.	10 A
Rated voltage for surge voltage class pollution degree II/2	320 V	Rated voltage for surge voltage class pollution degree III/2	160 V
Rated voltage for surge voltage class pollution degree III/3	160 V	Rated impulse voltage for surge voltage classpollution degree II/2	2.5 kV
Rated impulse voltage for surge voltage classpollution degree III/2	2.5 kV	Rated impulse voltage for surge voltage classcontamination degree III/3	2.5 kV
Short-time withstand current resistance	3 x 1s with 72 A		

OMNIMATE Signal - series LM
LM 3.50/05/90 3.2SN OR BX

Weidmüller Interface GmbH & Co. KG
Klingenbergstraße 16
D-32758 Detmold
Germany
Fon: +49 5231 14-0
Fax: +49 5231 14-292083
www.weidmueller.com

Technische Daten

CSA rating data

Institute (CSA)		Rated voltage (Use group B)	300 V
Rated current (use group B)	10 A	Rated voltage (use group D)	300 V
Rated current (use group D)	10 A	Wire cross-section, AWG, min.	AWG 28
Wire cross-section, AWG, max.	AWG 14		

UL 1059 rating data

Institute (UR)		Rated voltage (use group B)	300 V
Rated current (use group B)	10 A	Rated voltage (use group D)	300 V
Rated current (use group D)	10 A	Wire cross-section, AWG, min.	AWG 28
Wire cross-section, AWG, max.	AWG 14		

Classifications

ETIM 3.0	EC001284	UNSPSC	30-21-18-01
eClass 6.2	27-26-11-01	eClass 7.1	27-44-04-01

Notes

Notes

- Additional colours on request
- Rated current related to rated cross-section & min. No. of poles.
- Max. outer diameter of the conductor: 2.9 mm
- Wire end ferrule with plastic collar to DIN 46228/4
- P on drawing = pitch
- Rated data refer only to the component itself. Clearance and creepage distances to other components are to be designed in accordance with the relevant application standards.

Approvals

Approvals

ROHS	Conform

Downloads

CAD Library (P-CAD Format - ASCII)	LM.zip
CAD Library (P-CAD Format - Standard)	LM.zip

OMNIMATE Signal - series LM
LM 3.50/05/90 3.2SN OR BX

Weidmüller Interface GmbH & Co. KG
Klingenbergstraße 16
D-32758 Detmold
Germany
Fon: +49 5231 14-0
Fax: +49 5231 14-292083
www.weidmueller.com

Zeichnungen

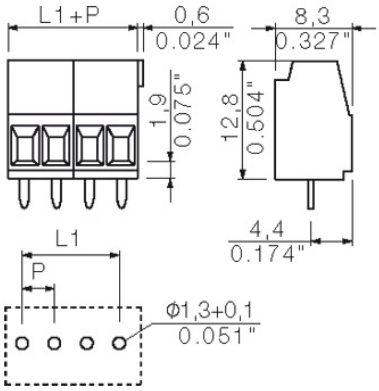

LM 3.5/../90

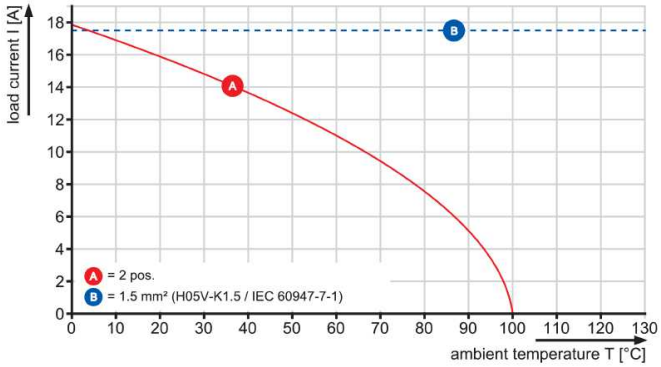

LM1N 3.5/../90

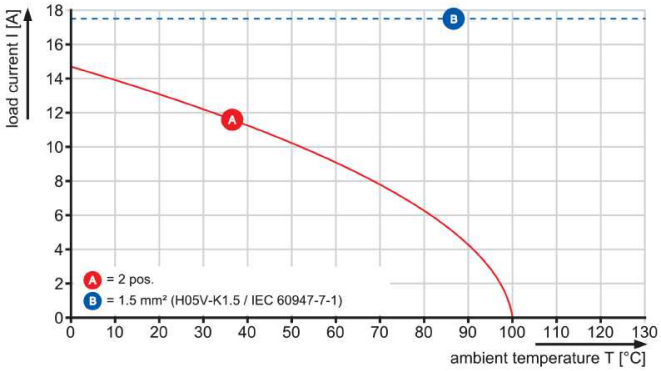

LM 3.5/../135

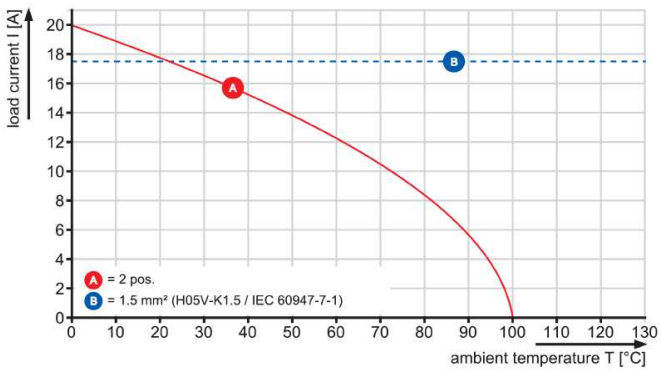

LM2N 3.5/../90

