OMNIMATE Signal - series BL/SL 5.08
SL-SMT 5.08/02/90G 1.5 SN BK RL

Weidmüller Interface GmbH & Co. KG
Klingenbergstraße 16
D-32758 Detmold
Germany
Fon: +49 5231 14-0
Fax: +49 5231 14-292083
www.weidmueller.com



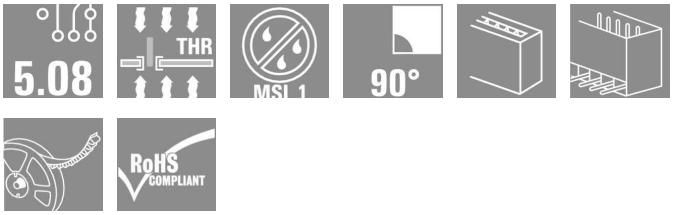

High-temperature-resistant male header, packed in box or tape. In tape with 1.5 mm solder pin optimised for automatic assembly. 3.2 mm solder pin suitable for reflow and wave soldering. These male connectors provide space for labelling and can be coded.

- 400 V (IEC) / 300 V (UL)
- 19 A (IEC) / 15 A (UL)

General ordering data

Type	SL-SMT 5.08/02/90G 1.5 SN BK RL
Order No.	1821140000
Version	PCB plug-in connector, male header, closed side, Reflow solder connection, 5.08 mm, No. of poles: 2, 90°, Solder pin length (l): 1.5 mm, tinned, Black, Tape
GTIN (EAN)	4032248319787
Qty.	350 pc(s).
Product data	IEC: 400 V / 19 A UL: 300 V / 15 A
Packaging	Tape

Erstellungs-Datum January 15, 2014 11:11:41 AM CET

OMNIMATE Signal - series BL/SL 5.08
SL-SMT 5.08/02/90G 1.5 SN BK RL

Weidmüller Interface GmbH & Co. KG
Klingenbergstraße 16
D-32758 Detmold
Germany
Fon: +49 5231 14-0
Fax: +49 5231 14-292083
www.weidmueller.com

Technische Daten

Dimensions and weights

Net weight	2.297 g

System parameters

Product family	OMNIMATE Signal - series BL/SL 5.08	Mounting onto the PCB	Reflow solder connection
Outgoing elbow	90°	Pitch in mm (P)	5.08 mm
Pitch in inches (P)	0.2 inch	No. of poles	2
Solder pin length (l)	1.5 mm	Pin dimensions	d = 1.2 mm, Octagonal
Can be coded	Yes	Number of solder pins per pole	1
Solder eyelet hole diameter (D)	1.5 mm	Solder eyelet hole diameter tolerance (D)	+ 0,1 mm
L1 in mm	5.08 mm	L1 in inches	0.2 inch

Material data

Insulating material	LCP GF	Colour	Black
Insulating material group	IIIa	UL 94 flammability rating	V-0
CTI	≥ 175	Contact material	CuSn
Coating	1-3 µm Ni, 5-7 µm SN	Contact surface	tinned
Max. relative humidity during storage	80 %		

DIN IEC rating data

Rated current, min. no. of poles (TU=20°C)	19 A	Rated current, max. no. of poles (Tu=20°C)	15 A
Rated current, number of poles (Tu=40°C), min	16 A	Rated current, number of poles (Tu=40°C), max.	13 A
Rated voltage for surge voltage class pollution degree III/3	250 V	Rated impulse voltage for surge voltage classcontamination degree III/3	4 kV
Rated voltage for surge voltage class pollution degree III/2	320 V	Rated impulse voltage for surge voltage classpollution degree III/2	4 kV
Rated voltage for surge voltage class pollution degree II/2	400 V	Rated impulse voltage for surge voltage classpollution degree II/2	4 kV

CSA rating data

Institute (CSA)		Rated voltage (Use group B)	300 V
Rated current (use group B)	15 A	Rated voltage (use group D)	300 V
Rated current (use group D)	10 A		

UL 1059 rating data

Institute (UR)		Rated voltage (use group B)	300 V
Rated current (use group B)	15 A	Rated voltage (use group D)	300 V
Rated current (use group D)	10 A		

OMNIMATE Signal - series BL/SL 5.08
SL-SMT 5.08/02/90G 1.5 SN BK RL

Weidmüller Interface GmbH & Co. KG
Klingenbergstraße 16
D-32758 Detmold
Germany
Fon: +49 5231 14-0
Fax: +49 5231 14-292083
www.weidmueller.com

Technische Daten

Classifications

ETIM 3.0	EC001284	UNSPSC	30-21-18-10
eClass 5.1	27-26-07-04	eClass 6.2	27-26-07-04
eClass 7.1	27-44-04-02		

Notes

Notes

- Gold-plated contact surfaces on request
- Rated current related to rated cross-section & min. No. of poles.
- Diameter of solder eyelet D = 1.4+0.1mm
- Solder eyelet diameter D = 1.5 + 0.1 mm, from 9 poles
- P on drawing = pitch
- Rated data refer only to the component itself. Clearance and creepage distances to other components are to be designed in accordance with the relevant application standards.

Approvals

Approvals

ROHS Conform

OMNIMATE Signal - series BL/SL 5.08
SL-SMT 5.08/02/90G 1.5 SN BK RL

Weidmüller Interface GmbH & Co. KG
Klingenbergstraße 16
D-32758 Detmold
Germany
Fon: +49 5231 14-0
Fax: +49 5231 14-292083
www.weidmueller.com

Zeichnungen

Dimensioned drawing

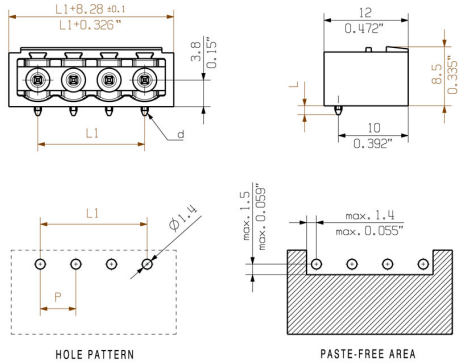

Dimensioned drawing

Packaging drawing

