OMNIMATE Signal - series BL/SL 5.08
SLS 5.08/06/180FI SN OR BX

Weidmüller Interface GmbH & Co. KG
Klingenbergstraße 16
D-32758 Detmold
Germany
Fon: +49 5231 14-0
Fax: +49 5231 14-292083
www.weidmueller.com

Product image



Similar to illustration

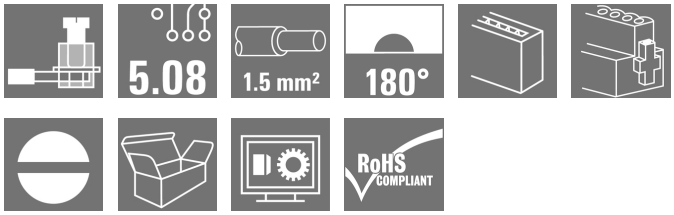

Male plugs with clamping-yoke screw wire-connect system. The male plugs provide space for labelling and can be coded.

General ordering data

Type	SLS 5.08/06/180FI SN OR BX
Order No.	1846250000
Version	PCB plug-in connector, male plug, 5.08 mm, No. of poles: 6, 180°, Clamping yoke connection, Clamping range, max. : 3.31 mm², Box
GTIN (EAN)	4032248362530
Qty.	42 pc(s).
Product data	IEC: 400 V / 21.5 A / 0.2 - 2.5 mm² UL: 300 V / 14 A / AWG 26 - AWG 12
Packaging	Box

OMNIMATE Signal - series BL/SL 5.08
SLS 5.08/06/180FI SN OR BX

Weidmüller Interface GmbH & Co. KG
Klingenbergstraße 16
D-32758 Detmold
Germany
Fon: +49 5231 14-0
Fax: +49 5231 14-292083
www.weidmueller.com

Technical data

Dimensions and weights

Height	15.2 mm	Height (inches)	0.598 inch
Depth	22.3 mm	Depth (inches)	0.878 inch
Net weight	12 g		

system parameters

Product family	OMNIMATE Signal - series BL/SL 5.08	Type of connection	Field connection
Wire connection method	Clamping yoke connection	Pitch in mm (P)	5.08 mm
Pitch in inches (P)	0.2 inch	Conductor outlet direction	180°
No. of poles	6	L1 in mm	25.4 mm
L1 in inches	1 inch	Number of rows	1
Pin series quantity	1	Touch-safe protection acc. to DIN VDE 57 106	finger-safe plugged/ back-of-hand-safe unplugged
Volume resistance	4.50 mΩ	Can be coded	Yes
Stripping length	7 mm	Tightening torque for screw flange, min.	0.15 Nm
Tightening torque for screw flange, max.	0.2 Nm	Tightening torque, min.	0.4 Nm
Tightening torque, max.	0.5 Nm	Clamping screw	M 2.5
Screwdriver blade	0.6 x 3.5	Screwdriver blade standard	DIN 5264-A
Plugging cycles	25	Plugging force/pole, max.	4 N
Pulling force/pole, max.	3 N		

Material data

Insulating material	PBT	Colour	orange
Colour chart (similar)	RAL 2000	Insulating material group	IIIa
CTI	≥ 200	Insulation strength	≥ 10^8 Ω
UL 94 flammability rating	V-0	GWFI	960 °C
Contact material	CuSn	Contact surface	tinned
Layer structure of plug contact	4-8 µm Sn hot-dip tinned	Storage temperature, min.	-25 °C
Storage temperature, max.	55 °C	Max. relative humidity during storage	80 %
Operating temperature, min.	-50 °C	Operating temperature, max.	100 °C
Temperature range, installation, min.	-25 °C	Temperature range, installation, max.	100 °C

Conductors suitable for connection

Clamping range, min.	0.13 mm²
Clamping range, max.	3.31 mm²
Wire connection cross section AWG, min.	AWG 26
Wire connection cross section AWG, max.	AWG 12
Solid, min. H05(07) V-U	0.2 mm²
Solid, max. H05(07) V-U	2.5 mm²
Flexible, min. H05(07) V-K	0.2 mm²
Flexible, max. H05(07) V-K	2.5 mm²
w. plastic collar ferrule, DIN 46228 pt 4, min.	0.2 mm²
w. plastic collar ferrule, DIN 46228 pt 4, max.	2.5 mm²
w. wire end ferrule, DIN 46228 pt 1, min	0.2 mm²
w. wire end ferrule, DIN 46228 pt 1, max.	2.5 mm²
Plug gauge in accordance with EN 60999 a x b; ø	2.8 mm x 2.0 mm; 2.4 mm

OMNIMATE Signal - series BL/SL 5.08
SLS 5.08/06/180FI SN OR BX

Weidmüller Interface GmbH & Co. KG
Klingenbergstraße 16
D-32758 Detmold
Germany
Fon: +49 5231 14-0
Fax: +49 5231 14-292083
www.weidmueller.com

Technical data

Clampable conductor	Cross-section for conductor connection	Type	fine-wired	
		nominal	0.5 mm²	
	AEH	Stripping length	nominal	6 mm
	Cross-section for conductor connection	Type	fine-wired	
		nominal	1 mm²	
	AEH	Stripping length	nominal	6 mm
	Cross-section for conductor connection	Type	fine-wired	
		nominal	1.5 mm²	
	AEH	Stripping length	nominal	7 mm
	Cross-section for conductor connection	Type	fine-wired	
		nominal	2.5 mm²	
	AEH	Stripping length	nominal	7 mm
	Cross-section for conductor connection	Type	fine-wired	
		nominal	0.75 mm²	
	AEH	Stripping length	nominal	6 mm
Reference text	The outside diameter of the plastic collar should not be larger than the pitch (P).			
Max. clamping range	3.31 mm²			

Rated data acc. to IEC

tested acc. to standard	IEC 60664-1, IEC 61984	Rated current, min. no. of poles (Tu=20°C)	21.5 A
Rated current, max. no. of poles (Tu=20°C)	16 A	Rated current, min. no. of poles (Tu=40°C)	18 A
Rated current, max. no. of poles (Tu=40°C)	14 A	Rated voltage for surge voltage class / pollution degree II/2	400 V
Rated voltage for surge voltage class / pollution degree III/2	320 V	Rated voltage for surge voltage class / pollution degree III/3	250 V
Rated impulse voltage for surge voltage class/ pollution degree II/2	4 kV	Rated impulse voltage for surge voltage class/ pollution degree III/2	4 kV
Rated impulse voltage for surge voltage class/ contamination degree III/3	4 kV	Short-time withstand current resistance	3 x 1s with 120 A

Rated data acc. to CSA

Rated voltage (Use group B / CSA)	300 V	Rated voltage (Use group D / CSA)	300 V
Rated current (Use group B / CSA)	15 A	Rated current (Use group D / CSA)	10 A
Wire cross-section, AWG, min.	AWG 26	Wire cross-section, AWG, max.	AWG 12

Rated data acc. to UL 1059

Institute (UR)		Certificate No. (UR)	E60693
Rated voltage (Use group B / UL 1059)	300 V	Rated voltage (Use group D / UL 1059)	300 V
Rated current (Use group B / UL 1059)	14 A	Rated current (Use group D / UL 1059)	10 A
Wire cross-section, AWG, min.	AWG 26	Wire cross-section, AWG, max.	AWG 12
Reference to approval values	Specifications are maximum values, details - see approval certificate.		

Packing

Packaging	Box	VPE length	30 mm
VPE width	135 mm	VPE height	350 mm

OMNIMATE Signal - series BL/SL 5.08
SLS 5.08/06/180FI SN OR BX

Weidmüller Interface GmbH & Co. KG
Klingenbergstraße 16
D-32758 Detmold
Germany
Fon: +49 5231 14-0
Fax: +49 5231 14-292083
www.weidmueller.com

Technical data

Classifications

ETIM 3.0	EC001284	ETIM 4.0	EC002637
ETIM 5.0	EC002637	ETIM 6.0	EC002638
UNSPSC	30-21-18-10	eClass 5.1	27-26-07-04
eClass 6.2	27-26-07-04	eClass 7.1	27-44-04-02
eClass 8.1	27-44-04-02	eClass 9.0	27-44-03-09
eClass 9.1	27-44-03-09		

Notes

Notes	• Additional colours on request • Rated current related to rated cross-section & min. No. of poles. • Wire end ferrule without plastic collar to DIN 46228/1 • Wire end ferrule with plastic collar to DIN 46228/4 • P on drawing = pitch • Rated data refer only to the component itself. Clearance and creepage distances to other components are to be designed in accordance with the relevant application standards.
IPC conformity	Conformity: The products are developed, manufactured and delivered according international recognized standards and norms and comply with the assured properties in the data sheet resp. fulfill decorative properties in accordance with IPC-A-610 "Class 2". Further claims on the products can be evaluated on request.

Approvals

Approvals	
ROHS	Conform

Downloads

Approval/Certificate/Document of Conformity	Declaration of the Manufacturer
Brochure/Catalogue	FL DRIVES EN MB DEVICE MANUF. EN FL DRIVES DE CAT 2 PORTFOLIOGUIDE EN FL BUILDING SAFETY EN FL APPL LED LIGHTING EN FL INDUSTR.CONTROLS EN FL MACHINE SAFETY EN FL HEATING ELECTR EN FL APPL_INVERTER EN FL_BASE_STATION_EN FL ELEVATOR EN FL POWER SUPPLY EN FL 72H SAMPLE SER EN PO OMNIMATE EN
Engineering Data	WSCAD
Engineering Data	STEP

OMNIMATE Signal - series BL/SL 5.08
SLS 5.08/06/180FI SN OR BX

Weidmüller Interface GmbH & Co. KG
Klingenbergstraße 16
D-32758 Detmold
Germany
Fon: +49 5231 14-0
Fax: +49 5231 14-292083
www.weidmueller.com

Drawings

Dimensional drawing

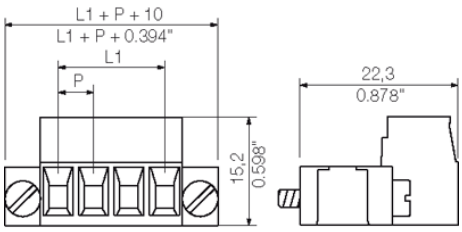

Graph

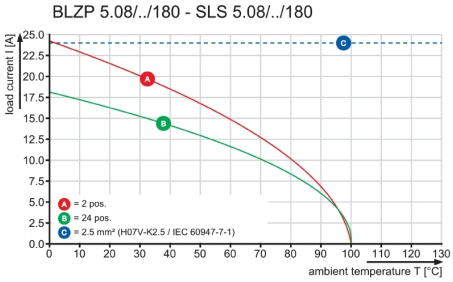

Graph

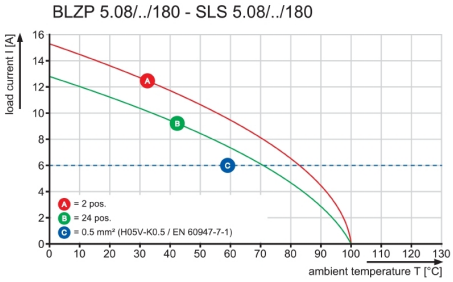

Graph

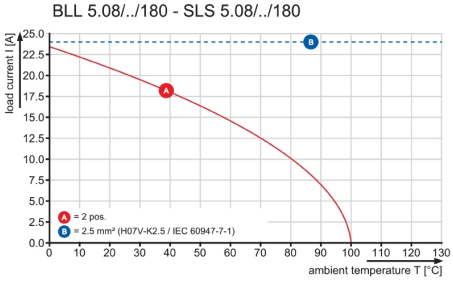

WEITERGABE SOWIE VERVIELFAELTIGUNG DIESES DOKUMENTS, VERWERTUNG UND MITTEILUNG SEINES INHALTS SIND VERBOTEN, SOWEIT NICHT AUSDRUECKLICH GESTATTET.
ZUWIDERHANDLUNGEN VERPFLICHTEN ZU SCHADENERSATZ. ALLE RECHTE FUER DEN FALL DER PATENT-, GEBRAUCHSMUSTER- ODER GESCHMACKSMUSTEREINTRAGUNG VORBEHALTEN.
THE REPRODUCTION, DISTRIBUTION AND UTILIZATION OF THIS DOCUMENT AS WELL AS THE COMMUNICATION OF ITS CONTENTS TO OTHERS WITHOUT EXPLICID AUTHORIZATION IS PROHIBITED.
OFFENDERS WILL BE HELD LIABLE FOR THE PAYMENT OF DAMAGES. ALL RIGHTS RESERVED IN THE EVENT OF THE GRANT OF A PATENT, UTILITY MODEL OR DESIGN.

DIE DEUTSCHE VERSION IST VERBINDLICH
THE GERMAN VERSION IS BINDING

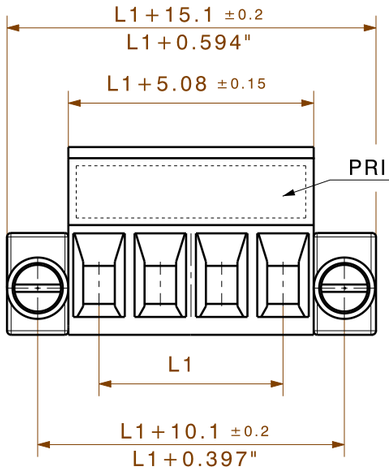

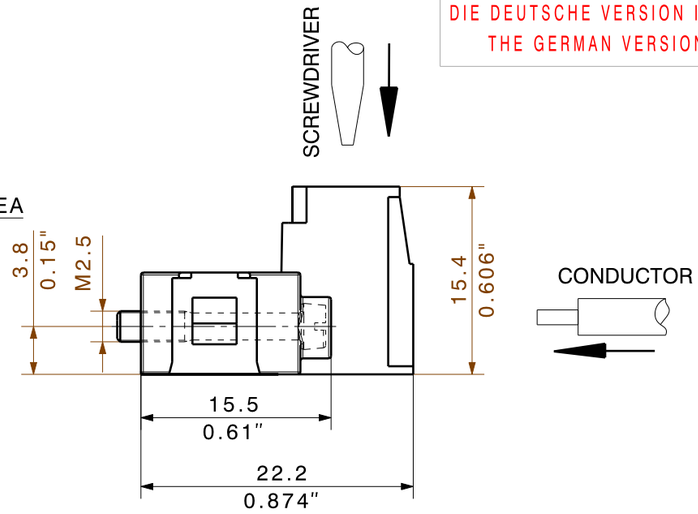

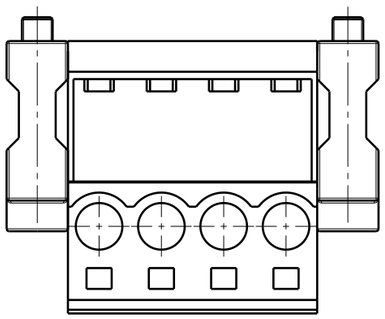

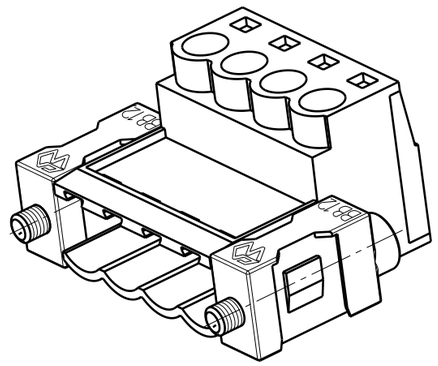

n	L1 [mm]	L1 [inch]
24	116,84	4,600
23	111,76	4,400
22	106,68	4,200
21	101,60	4,000
20	96,52	3,800
19	91,44	3,600
18	86,36	3,400
17	81,28	3,200
16	76,20	3,000
15	71,12	2,800
14	66,04	2,600
13	60,96	2,400
12	55,88	2,200
11	50,80	2,000
10	45,72	1,800
9	40,64	1,600
8	35,56	1,400
7	30,48	1,200
6	25,40	1,000
5	20,32	0,800
4	15,24	0,600
3	10,16	0,400
2	5,08	0,200

SHOWN: SLS 5.08/04/180FI

For the mounting of PCBs, it should be noted that the rated data relates only to the PCB components alone.
The neccessary creepage and clearance paths must be observed in connection with the respective applicant in accordance to IEC 664 / VDE 0110.
The current-carrying capacity and pitch tolerance is to be determined according to DIN IEC 326 part 3 very fine.

Weidmüller PCB components are tested to the DIN EN 61984 standard, and are valid for its field of application. Provided that the components are used to the intended purpose, all requirements with respect to the occuring of electrical, mechanical, thermic and corrosive stress will be satisfied.

RoHS COMPLIANT

METRIC TOLERANCES:
X. = ±0.3
X.X = ±0.1
X.XX = ±0.05

53611/5
06.10.10 HERTEL_S 01

MODIFICATION

CAT.NO.:

Weidmüller

C 34205 03
DRAWING NO. ISSUE NO.
SHEET 02 OF 02 SHEETS

	DATE	NAME
DRAWN	26.03.2007	HERTEL_S
RESPONSIBLE		HERTEL_S
CHECKED	06.10.2010	HECKERT_M
APPROVED		HECKERT_M

SCALE: 2:1
SUPERSEDES:
SUPERSEDED BY:

SLS 5.08/../180 F(FI)..

STIFTLEISTE
PIN HEADER

PRODUCT FILE: SLS 5.08 7314