OMNIMATE Signal - series LSF
LSF-SMT 5.08/10/135 3.5SN BK TU

Weidmüller Interface GmbH & Co. KG
Klingenbergstraße 16
D-32758 Detmold
Germany
Fon: +49 5231 14-0
Fax: +49 5231 14-292083
www.weidmueller.com



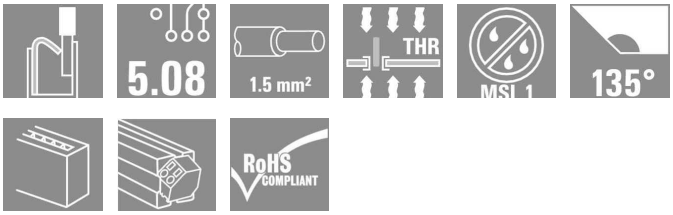

PCB terminal for fully automatic assembly in reflow soldering (SMT), with Push In conductor connection system. Conductor inserted and slider operated in same direction (TOP). Packed in box or as tape on reel. Pin lengths optimised at 1.5 mm or 3.5 mm.

- 0.20 - 1.5 mm² (IEC) / 24 - 16 AWG (UL)
- 500 V (IEC) / 300 V (UL)
- 17.5 A (IEC) / 12 A (UL)

General ordering data

Type	LSF-SMT 5.08/10/135 3.5SN BK TU
Order No.	1885100000
Version	PCB terminal, 5.08 mm, No. of poles: 10, 135°, Solder pin length (l): 3.5 mm, tinned, Black, PUSH IN spring connection, Clamping range, rated connection, max.: 1.5 mm², Tube
GTIN (EAN)	4032248489763
Qty.	11 pc(s).
Product data	IEC: 500 V / 17.5 A / 0.2 - 1.5 mm² UL: 300 V / 12 A / AWG 24 - AWG 16
Packaging	Tube

Erstellungs-Datum January 16, 2014 12:45:49 PM CET

OMNIMATE Signal - series LSF
LSF-SMT 5.08/10/135 3.5SN BK TU

Weidmüller Interface GmbH & Co. KG
Klingenbergstraße 16
D-32758 Detmold
Germany
Fon: +49 5231 14-0
Fax: +49 5231 14-292083
www.weidmueller.com

Technische Daten

Dimensions and weights

Net weight	11.636 g

System characteristics

Product family	OMNIMATE Signal - series LSF	Wire connection method	PUSH IN spring connection
Mounting onto the PCB	Reflow solder connection	Conductor outlet direction	135°
Pitch in mm (P)	5.08 mm	Pitch in inches (P)	0.2 inch
No. of poles	10	Fitted by customer	Yes
Solder pin length (l)	3.5 mm	Solder eyelet hole diameter (D)	1.1 mm
Solder eyelet hole diameter tolerance (D)	+ 0,1 mm	Number of solder pins per pole	2
Stripping length	8 mm	L1 in mm	45.72 mm
L1 in inches	1.8 inch	Touch-safe protection acc. to DIN VDE 0470	IP 20
Touch-safe protection acc. to DIN VDE 57 106	Safe from finger touch		

Material data

Insulating material	LCP GF	Colour	Black
UL 94 flammability rating	V-0	CTI	≥ 175
Contact material	Cu-Leg	Contact surface	tinned
Contact base material	Cu-Leg		

Connectable conductors

Clamping range, rated connection, min.	0.13 mm²	Clamping range, rated connection, max.	1.5 mm²
Wire connection cross section AWG, min.	AWG 24	Wire connection cross section AWG, max.	AWG 16
Solid, min. H05(07) V-U	0.2 mm²	Solid, max. H05(07) V-U	1.5 mm²
Flexible, min. H05(07) V-K	0.2 mm²	Flexible, max. H05(07) V-K	1.5 mm²
w. wire end ferrule, DIN 46228 pt 1, min	0.25 mm²	w. wire end ferrule, DIN 46228 pt 1, max.	1.5 mm²
w. plastic collar ferrule, DIN 46228 pt 4, min.	0.25 mm²	w. plastic collar ferrule, DIN 46228 pt 4, max.	0.75 mm²

DIN IEC rating data

Rated current, min. no. of poles (TU=20°C)	17.5 A	Rated current, max. no. of poles (Tu=20°C)	17.5 A
Rated current, number of poles (Tu=40°C), min	17.5 A	Rated current, number of poles (Tu=40°C), max.	15 A
Rated voltage for surge voltage class pollution degree II/2	500 V	Rated voltage for surge voltage class pollution degree III/2	320 V
Rated voltage for surge voltage class pollution degree III/3	250 V	Rated impulse voltage for surge voltage classpollution degree II/2	4 kV
Rated impulse voltage for surge voltage classpollution degree III/2	4 kV	Rated impulse voltage for surge voltage classcontamination degree III/3	4 kV
Short-time withstand current resistance	3 x 1s with 80 A		

OMNIMATE Signal - series LSF
LSF-SMT 5.08/10/135 3.5SN BK TU

Weidmüller Interface GmbH & Co. KG
Klingenbergstraße 16
D-32758 Detmold
Germany
Fon: +49 5231 14-0
Fax: +49 5231 14-292083
www.weidmueller.com

Technische Daten

CSA rating data

Institute (CSA)		Rated voltage (Use group B)	300 V
Rated current (use group B)	10 A	Rated voltage (use group D)	300 V
Rated current (use group D)	10 A	Wire cross-section, AWG, min.	AWG 24
Wire cross-section, AWG, max.	AWG 16		

UL 1059 rating data

Rated voltage (use group B)	300 V	Rated current (use group B)	12 A
Rated voltage (use group D)	300 V	Rated current (use group D)	10 A
Wire cross-section, AWG, min.	AWG 24	Wire cross-section, AWG, max.	AWG 16

Classifications

ETIM 3.0	EC001284	UNSPSC	30-21-18-11
eClass 5.1	27-26-11-01	eClass 6.2	27-26-11-01
eClass 7.1	27-44-04-01		

Notes

Notes

- Additional push button colours on request
- Rated current related to rated cross-section & min. No. of poles.
- Wire end ferrule without plastic collar to DIN 46228/1
- P on drawing = pitch
- Operating force of slider max. 40 N
- Rated data refer only to the component itself. Clearance and creepage distances to other components are to be designed in accordance with the relevant application standards.
- Crimping shape "A" for wire end ferrules with PZ 6/5 crimping tool are recommended for the largest cable sizes.

Approvals

Approvals

ROHS	Conform

OMNIMATE Signal - series LSF
LSF-SMT 5.08/10/135 3.5SN BK TU

Weidmüller Interface GmbH & Co. KG
Klingenbergstraße 16
D-32758 Detmold
Germany
Fon: +49 5231 14-0
Fax: +49 5231 14-292083
www.weidmueller.com

Zeichnungen

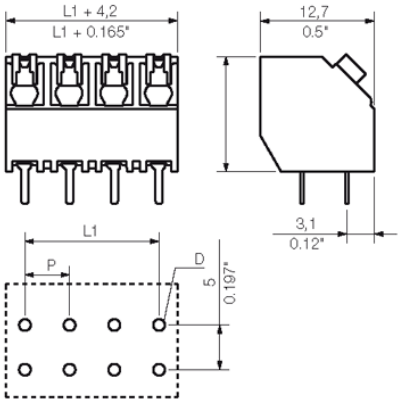

LSF-SMT 5.08/../135 1.5

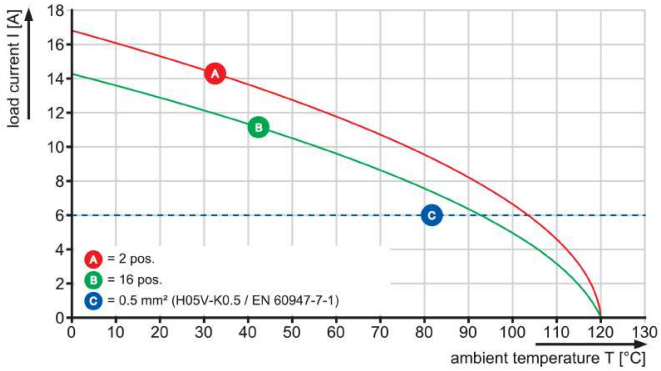

LSF-SMT 5.08/../135 1.5

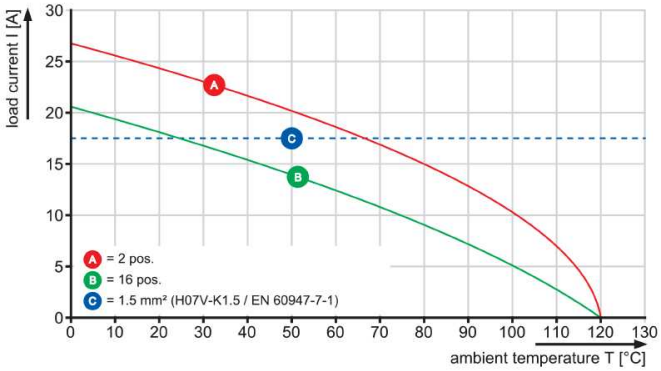

LSF-SMT 5.08/../135 3.5

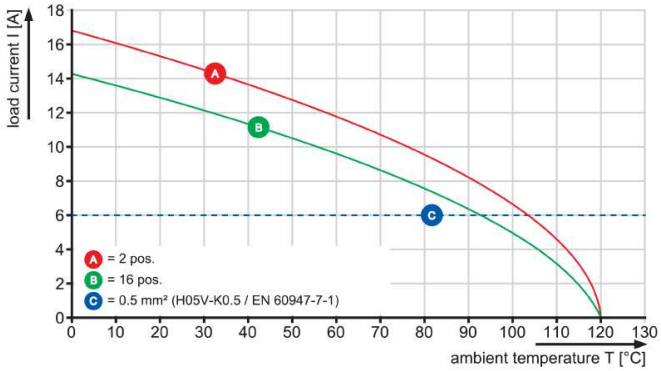

LSF-SMT 5.08/../135 3.5

