OMNIMATE Power - series BV/SV 7.62HP
SV 7.62HP/03/180SF 3.5SN BK BX

Weidmüller Interface GmbH & Co. KG
Klingenbergstraße 16
D-32758 Detmold
Germany
Fon: +49 5231 14-0
Fax: +49 5231 14-292083
www.weidmueller.com

Product image

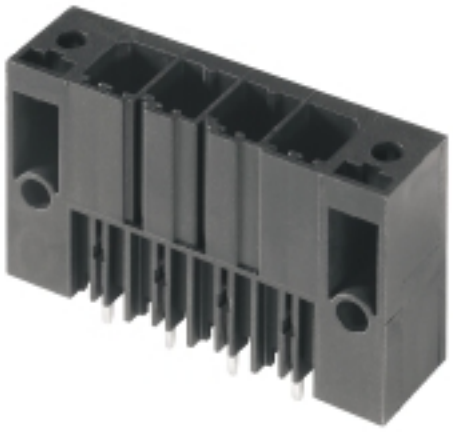

Similar to illustration

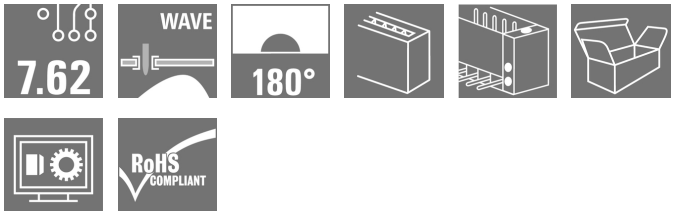

Single-row, high-performance male header for side-by-side mounting without sacrificing any poles or with patented flange for fast fixing without tools. Maximum connection and operating reliability thanks to a mating profile that prevents incorrect connection, with unique coding diversity and additional fastening in the flange. 3.5 mm pin length is optimised for lead-free wave soldering.

General ordering data

Type	SV 7.62HP/03/180SF 3.5SN BK BX
Order No.	1930830000
Version	PCB plug-in connector, male header, Screw/clip-on flange, THT solder connection, 7.62 mm, No. of poles: 3, 180°, Solder pin length (l): 3.5 mm, tinned, black, Box
GTIN (EAN)	4032248580804
Qty.	48 pc(s).
Product data	IEC: 1000 V / 57 A UL: 300 V / 40.5 A
Packaging	Box

OMNIMATE Power - series BV/SV 7.62HP
SV 7.62HP/03/180SF 3.5SN BK BX

Weidmüller Interface GmbH & Co. KG
Klingenbergstraße 16
D-32758 Detmold
Germany
Fon: +49 5231 14-0
Fax: +49 5231 14-292083
www.weidmueller.com

Technical data

Dimensions and weights

Height	31.8 mm	Height (inches)	1.252 inch
Height of lowest version	28.3 mm	Depth	11.4 mm
Depth (inches)	0.449 inch	Net weight	10.15 g

System specifications

Product family	OMNIMATE Power - series BV/SV 7.62HP	Type of connection	Board connection
Mounting onto the PCB	THT solder connection	Pitch in mm (P)	7.62 mm
Pitch in inches (P)	0.3 inch	Outgoing elbow	180°
No. of poles	3	Number of solder pins per pole	2
Solder pin length (l)	3.5 mm	Solder pin length tolerance	+0.1 / -0.3 mm
Tolerance of solder pin position	± 0.1 mm	Solder pin dimensions	0.8 x 1.0 mm
Solder eyelet hole diameter (D)	1.3 mm	Solder eyelet hole diameter tolerance (D)	+ 0,1 mm
L1 in mm	15.24 mm	L1 in inches	0.6 inch
Number of rows	1	Pin series quantity	1
Touch-safe protection acc. to DIN VDE 57 106	Touch-safe above the printed circuit board	Touch-safe protection acc. to DIN VDE 0470	IP 20
Volume resistance	2.00 mΩ	Can be coded	Yes
Tightening torque for screw flange, min.	0.2 Nm	Tightening torque for screw flange, max.	0.3 Nm
Plugging cycles	25		

Material data

Insulating material	PA GF	Colour	black
Colour chart (similar)	RAL 9011	Insulating material group	II
CTI	≥ 500	Insulation strength	≥ 10^8 Ω
UL 94 flammability rating	V-0	GWFI	960 °C
Contact material	Copper alloy	Contact surface	tinned
Layer structure of solder connection	1-3 µm Ni / 4-6 µm Sn matt	Layer structure of plug contact	1-3 µm Ni / 4-6 µm Sn matt
Storage temperature, min.	-25 °C	Storage temperature, max.	55 °C
Max. relative humidity during storage	80 %	Operating temperature, min.	-50 °C
Operating temperature, max.	130 °C	Temperature range, installation, min.	-25 °C
Temperature range, installation, max.	130 °C		

Rated data acc. to IEC

tested acc. to standard	IEC 60664-1, IEC 61984	Rated current, min. no. of poles (Tu=20°C)	57 A
Rated current, max. no. of poles (Tu=20°C)	41 A	Rated current, min. no. of poles (Tu=40°C)	41 A
Rated current, max. no. of poles (Tu=40°C)	41 A	Rated voltage for surge voltage class / pollution degree II/2	1,000 V
Rated voltage for surge voltage class / pollution degree III/2	630 V	Rated voltage for surge voltage class / pollution degree III/3	630 V
Rated impulse voltage for surge voltage class/ pollution degree II/2	6 kV	Rated impulse voltage for surge voltage class/ pollution degree III/2	6 kV
Rated impulse voltage for surge voltage class/ contamination degree III/3	6 kV	Short-time withstand current resistance	3 x 1s with 420 A
Clearance, min.	6.9 mm	Creepage distance, min.	9.6 mm

OMNIMATE Power - series BV/SV 7.62HP
SV 7.62HP/03/180SF 3.5SN BK BX

Weidmüller Interface GmbH & Co. KG
Klingenbergstraße 16
D-32758 Detmold
Germany
Fon: +49 5231 14-0
Fax: +49 5231 14-292083
www.weidmueller.com

Technical data

Rated data acc. to CSA

Institute (CSA)		Certificate No. (CSA)	200039-1121690
Rated voltage (Use group B / CSA)	300 V	Rated voltage (Use group C / CSA)	300 V
Rated voltage (Use group D / CSA)	600 V	Rated current (Use group B / CSA)	35 A
Rated current (Use group C / CSA)	35 A	Rated current (Use group D / CSA)	5 A
Reference to approval values	Specifications are maximum values, details - see approval certificate.		

Rated data acc. to UL 1059

Institute (cURus)		Certificate No. (cURus)	E60693
Rated voltage (Use group B / UL 1059)	300 V	Rated voltage (Use group C / UL 1059)	300 V
Rated voltage (Use group D / UL 1059)	600 V	Rated current (Use group B / UL 1059)	40.5 A
Rated current (Use group C / UL 1059)	40.5 A	Rated current (Use group D / UL 1059)	5 A
Clearance distance, min.	6.9 mm	Creepage distance, min.	9.6 mm
Reference to approval values	Specifications are maximum values, details - see approval certificate.		

Packing

Packaging	Box	VPE length	35 mm
VPE width	125 mm	VPE height	350 mm

Classifications

ETIM 4.0	EC002637	ETIM 5.0	EC002637
ETIM 6.0	EC002637	UNSPSC	30-21-18-10
eClass 5.1	27-26-07-04	eClass 6.2	27-26-07-04
eClass 7.1	27-44-04-02	eClass 8.1	27-44-04-02
eClass 9.0	27-44-04-02	eClass 9.1	27-44-04-02

Notes

Notes	• Additional colours on request • Rated current related to rated cross-section & min. No. of poles. • P on drawing = pitch • Rated data refer only to the component itself. Clearance and creepage distances to other components are to be designed in accordance with the relevant application standards. • Diameter of solder eyelet D = 1.4+0.1 mm starting with 8-pole
IPC conformity	Conformity: The products are developed, manufactured and delivered according international recognized standards and norms and comply with the assured properties in the data sheet resp. fulfill decorative properties in accordance with IPC-A-610 "Class 2". Further claims on the products can be evaluated on request.

OMNIMATE Power - series BV/SV 7.62HP
SV 7.62HP/03/180SF 3.5SN BK BX

Weidmüller Interface GmbH & Co. KG
Klingenbergstraße 16
D-32758 Detmold
Germany
Fon: +49 5231 14-0
Fax: +49 5231 14-292083
www.weidmueller.com

Technical data

Approvals

Approvals	
ROHS	Conform

Downloads

Approval/Certificate/Document of Conformity	Declaration of the Manufacturer
Brochure/Catalogue	FL DRIVES EN MB DEVICE MANUF. EN FL DRIVES DE CAT 2 PORTFOLIOGUIDE EN FL HEATING ELECTR EN FL APPL_INVERTER EN FL_BASE_STATION_EN FL ELEVATOR EN FL POWER SUPPLY EN FL 72H SAMPLE SER EN PO OMNIMATE EN
Engineering Data	EPLAN, WSCAD
Engineering Data	SV.zip
Motion controllers white paper	Download Whitepaper
White Paper UL 600 V	Download Whitepaper

OMNIMATE Power - series BV/SV 7.62HP
SV 7.62HP/03/180SF 3.5SN BK BX

Weidmüller Interface GmbH & Co. KG
Klingenbergstraße 16
D-32758 Detmold
Germany
Fon: +49 5231 14-0
Fax: +49 5231 14-292083
www.weidmueller.com

Drawings

Dimensional drawing

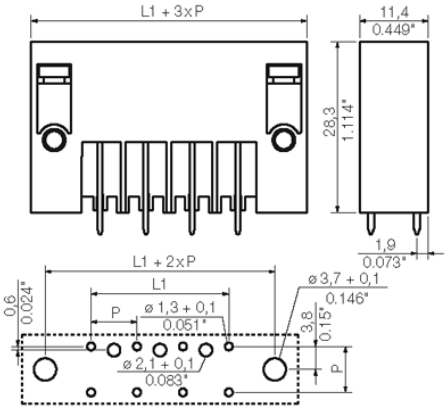

Wave Solder Profile

Recommended wave solderding profiles

Weidmüller Interface GmbH & Co. KG
Klingenbergstraße 16
D-32758 Detmold
Germany
Fon: +49 5231 14-0
Fax: +49 5231 14-292083
www.weidmueller.com

Single Wave:

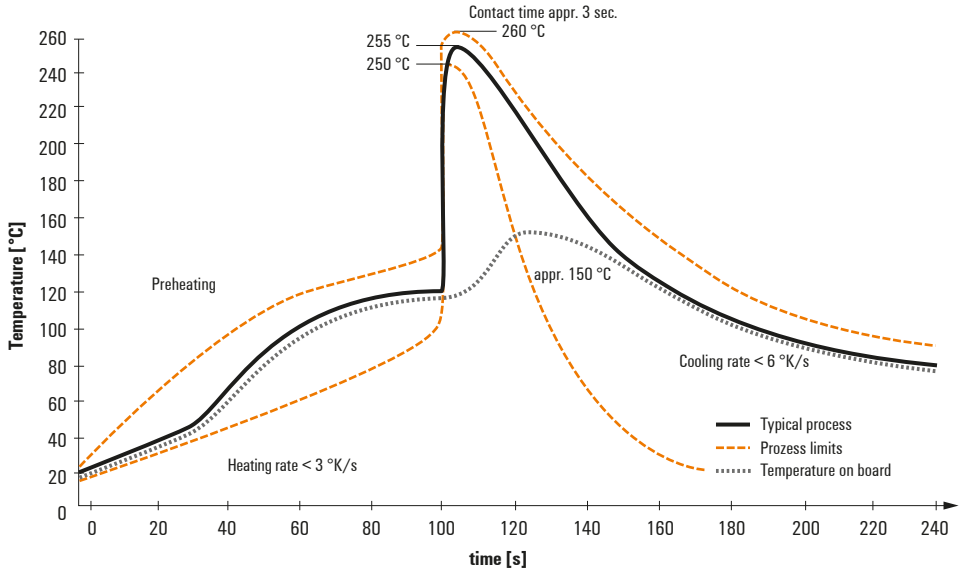

Double Wave:

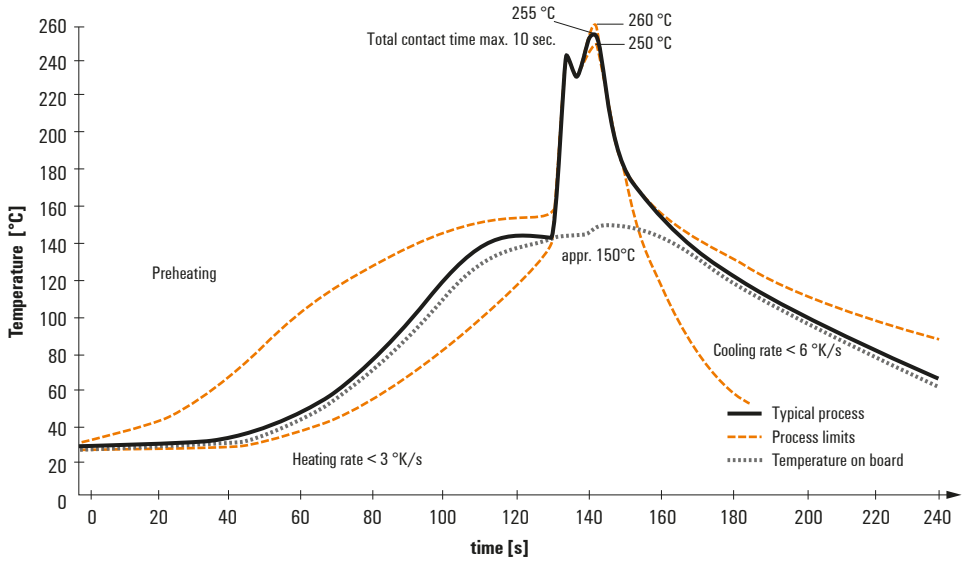

Wave soldering profiles

Wired connection elements should be processed in accordance with the DIN EN 61760-1 standard. We have included two recommendations for practical wave soldering profiles, with which Weidmüller PCB terminals and connectors are qualified.

When choosing a suitable profile for your application, the following factors also need to be considered:
- PCB thickness
- Proportion of Cu in the layers
- Single/double-sided assembly
- Product range
- Heating and cooling rates

The single and double wave profiles each indicate the recommended operating range, including the maximum soldering temperature of 260°C. In practice, the maximum soldering temperature is quite often well below the above maximum profile.

We reserve the right to make technical changes.