OMNIMATE Power - series BV/SV 7.62HP
SVZ 7.62HP/03/180SF SN BK BX

Weidmüller Interface GmbH & Co. KG
Klingenbergstraße 16
D-32758 Detmold
Germany
Fon: +49 5231 14-0
Fax: +49 5231 14-292083
www.weidmueller.com



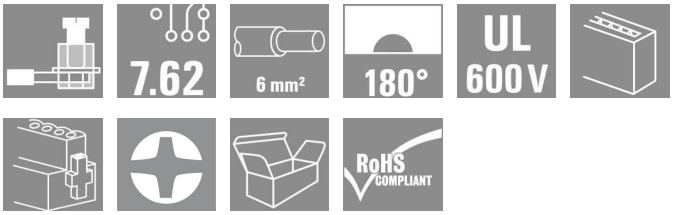

High-performance male header with the tried-and-tested, guaranteed zero-maintenance, Weidmüller steel clamping yoke. Side-by-side mounting without losing any poles or with patented multifunction flange for secure, fast fixing without tools. Maximum connection and operating reliability thanks to pin arrangement that prevents wrong connections or wrong wiring, unique coding diversity. Can be labelled.

- 0.20 - 6 mm² (IEC) / 22 - 10 AWG (UL)
- 800 V (IEC) / 600 V (UL)
- 41 A (IEC) / 32 A (UL)

General ordering data

Type	SVZ 7.62HP/03/180SF SN BK BX
Order No.	1931970000
Version	PCB plug-in connector, male plug, 7.62 mm, No. of poles: 3, 180°, Clamping yoke connection, Clamping range, rated connection, max.: 6 mm², Box
GTIN (EAN)	4032248581986
Qty.	100 pc(s).
Product data	IEC: 1000 V / 41 A / 0.2 - 6 mm² UL: 600 V / 35 A / AWG 24 - AWG 10
Packaging	Box

Erstellungs-Datum January 27, 2014 10:29:16 AM CET

OMNIMATE Power - series BV/SV 7.62HP
SVZ 7.62HP/03/180SF SN BK BX

Weidmüller Interface GmbH & Co. KG
Klingenbergstraße 16
D-32758 Detmold
Germany
Fon: +49 5231 14-0
Fax: +49 5231 14-292083
www.weidmueller.com

Technische Daten

Dimensions and weights

Net weight	17.9 g

System parameters

Product family	OMNIMATE Power - series BV/SV 7.62HP	Wire connection method	Clamping yoke connection
Conductor outlet direction	180°	Pitch in mm (P)	7.62 mm
Pitch in inches (P)	0.3 inch	No. of poles	3
Screwdriver blade	0.8 x 4.5	Screwdriver blade standard	DIN 5264
Tightening torque, min.	0.5 Nm	Tightening torque, max.	0.6 Nm
Clamping screw	M 3	Stripping length	12 mm
L1 in mm	15.24 mm	L1 in inches	0.6 inch
Touch-safe protection acc. to DIN VDE 0470	IP20 plugged	Touch-safe protection acc. to DIN VDE 57 106	Safe from finger touch

Material data

Insulating material	PA GF	Colour	Black
Colour chart (similar)	RAL 9011	UL 94 flammability rating	V-0
CTI	≥ 500	Contact material	Cu-Leg
Contact surface	tinned	Contact base material	Cu-Leg

Connectable conductors

Clamping range, rated connection, min.	0.2 mm²	Clamping range, rated connection, max.	6 mm²
Wire connection cross section AWG, min.	AWG 22	Wire connection cross section AWG, max.	AWG 10
Solid, min. H05(07) V-U	0.2 mm²	Solid, max. H05(07) V-U	6 mm²
Flexible, min. H05(07) V-K	0.5 mm²	Flexible, max. H05(07) V-K	6 mm²
w. wire end ferrule, DIN 46228 pt 1, min	0.25 mm²	w. wire end ferrule, DIN 46228 pt 1, max.	6 mm²
w. plastic collar ferrule, DIN 46228 pt 4, min.	0.25 mm²	w. plastic collar ferrule, DIN 46228 pt 4, max.	6 mm²
Plug gauge acc. to EN 60999 a x b; Ø	2.8 mm x 2.0 mm; 2.4 mm		

DIN IEC rating data

Rated current, min. no. of poles (TU=20°C)	41 A	Rated current, max. no. of poles (Tu=20°C)	41 A
Rated current, number of poles (Tu=40°C), min	41 A	Rated current, number of poles (Tu=40°C), max.	41 A
Rated voltage for surge voltage class pollution degree II/2	1,000 V	Rated voltage for surge voltage class pollution degree III/2	1,000 V
Rated voltage for surge voltage class pollution degree III/3	800 V	Rated impulse voltage for surge voltage classpollution degree II/2	6 kV
Rated impulse voltage for surge voltage classpollution degree III/2	8 kV	Rated impulse voltage for surge voltage classcontamination degree III/3	8 kV
Short-time withstand current resistance	3 x 1s with 420 A		

OMNIMATE Power - series BV/SV 7.62HP
SVZ 7.62HP/03/180SF SN BK BX

Weidmüller Interface GmbH & Co. KG
Klingenbergstraße 16
D-32758 Detmold
Germany
Fon: +49 5231 14-0
Fax: +49 5231 14-292083
www.weidmueller.com

Technische Daten

CSA rating data

Institute (CSA)		Rated voltage (Use group B)	600 V
Rated current (use group B)	35 A	Rated voltage (Use group C)	600 V
Rated current (use group C)	35 A	Rated voltage (use group D)	600 V
Rated current (use group D)	5 A	Wire cross-section, AWG, min.	AWG 24
Wire cross-section, AWG, max.	AWG 10		

UL 1059 rating data

Rated voltage (use group B)	600 V	Rated current (use group B)	35 A
Rated voltage (use group C)	600 V	Rated current (use group C)	35 A
Rated voltage (use group D)	600 V	Rated current (use group D)	5 A
Wire cross-section, AWG, min.	AWG 24	Wire cross-section, AWG, max.	AWG 10

Classifications

UNSPSC	30-21-18-10	eClass 5.1	27-26-07-04
eClass 6.2	27-26-07-04	eClass 7.1	27-44-04-02

Notes

Notes

- Additional colours on request
- Rated current related to rated cross-section & min. No. of poles.
- Wire end ferrule without plastic collar to DIN 46228/1
- Wire end ferrule with plastic collar to DIN 46228/4
- P on drawing = pitch
- Rated data refer only to the component itself. Clearance and creepage distances to other components are to be designed in accordance with the relevant application standards.

Approvals

Approvals

ROHS: Conform

OMNIMATE Power - series BV/SV 7.62HP
SVZ 7.62HP/03/180SF SN BK BX

Weidmüller Interface GmbH & Co. KG
Klingenbergstraße 16
D-32758 Detmold
Germany
Fon: +49 5231 14-0
Fax: +49 5231 14-292083
www.weidmueller.com

Zeichnungen

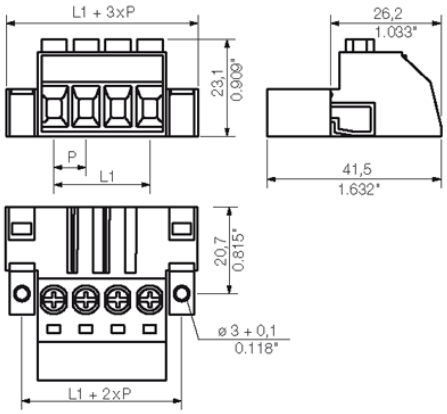

BVL 7.62HP/../180 - SVZ 7.62HP/../180

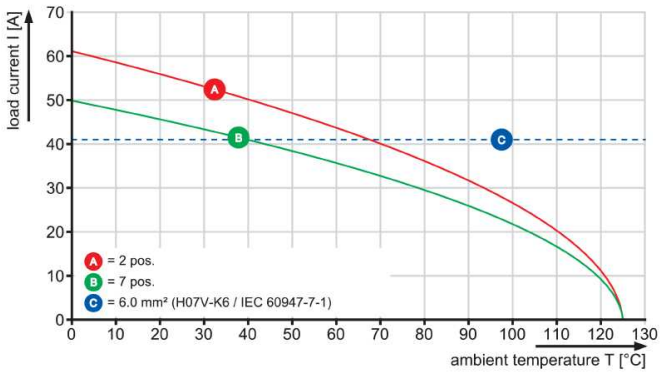

BVZ 7.62HP/../180 - SVZ 7.62HP/../180

