

Infinity®

Minuette

L-MPS

LARGE MULTI-PURPOSE SATELLITE

OWNER ' SMANUAL

UNPACKING

1. Carefully unpack the speakers. If you suspect damage from transit, report it immediately to your dealer and/or delivery service. Keep the shipping carton and packing materials for future use.

2. Verify that the package includes the following items:
   - (2) L-MPS Speakers
   - (2) Mounting Brackets and Hardware
   - (1) Owner's Manual
   - (2) Speaker Bases

PLANNING YOUR SYSTEM

Infinity L-MPS (Large Multi-Purpose Satellite) speakers are specific components for your home entertainment system. You can use them to reproduce sound for the front or rear channels, or both.

To help plan your system, study the drawing (shown in Figure 1) to determine a placement that best suits your needs.

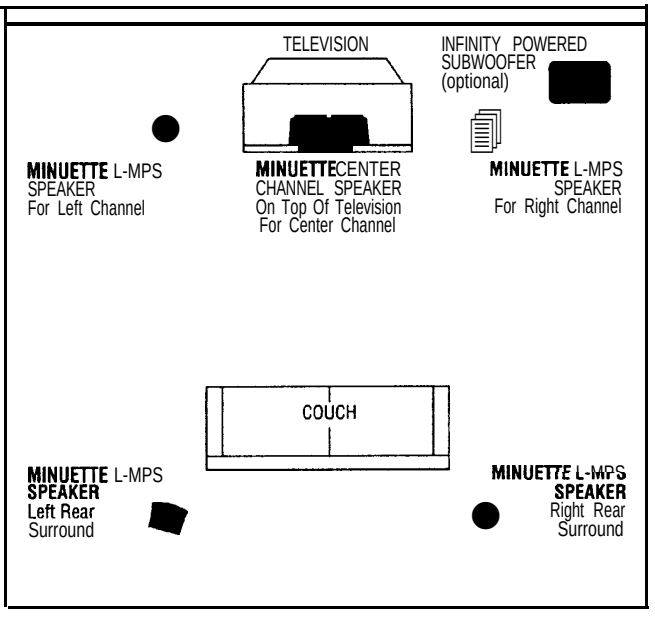

FIGURE 1. In this overhead view of a typical 6-piece home entertainment system, *Minuette L-MPS* speakers *are* used to reproduce *sound for the front* and rear *(surround)* channels. *A Minuette Center Channel speaker is added to enhance center-channel* dialogue. *An* optional Infinity *Powered Subwoofer is used to prooide* extra bass *for* effects *and music.*

PLACEMENT

FRONT **PLACEMENT**

Using speaker stands or bookshelves, place a pair of Minuette L-MPS speakers on their bases (included) and place on either side of the television. They can be aimed at the viewing audience, if desired (see Figure 1). Experiment with different placement to find the most pleasing effect for your system.

NOTE: Minuette *L-MPS speakers* may be placed *vertically on* their *bases or horizon tally (see Figures 2 and 3 on the next page).*

For wall and ceiling mounting, Miiuette L-MPS speakers can be installed in a variety of ways, as shown in Figures 4 through 7 (on the next two pages). You can mount the speakers directly with screws (not included), or use the enclosed mounting brackets. Locate a stud for secure mounting. Use heavy-duty screws with long threads so there is an adequate number of threads holding the speaker (or speaker/bracket) to the wall. Test the mounting thoroughly before final installation.

REAR PLACEMENT

For rear channel placement, follow the same procedure for front placement, except place a pair of L-MPS speakers slightly behind or ahead and above either side of the viewing audience (see Figure 1).

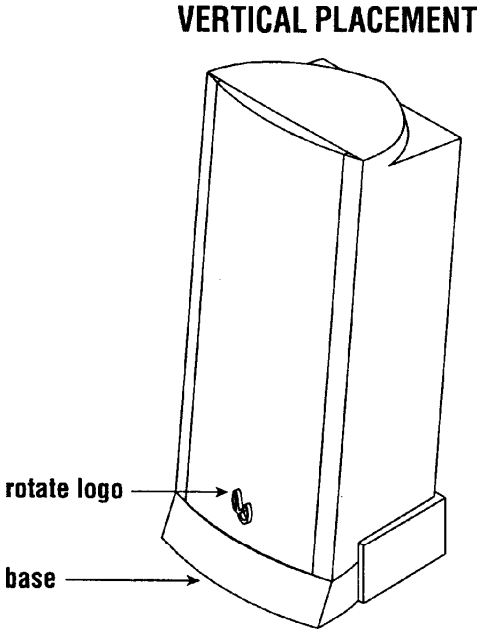

FIGURE 2. Free-standing *vertical* placement *of L-MPS* speaker. NOTE: Use the enclosed base *for* added stability.

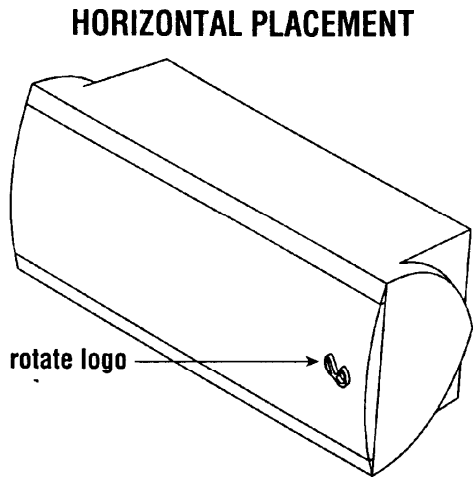

FIGURE *3. Free-standing* horizontal placement *of* L-MPS speaker.

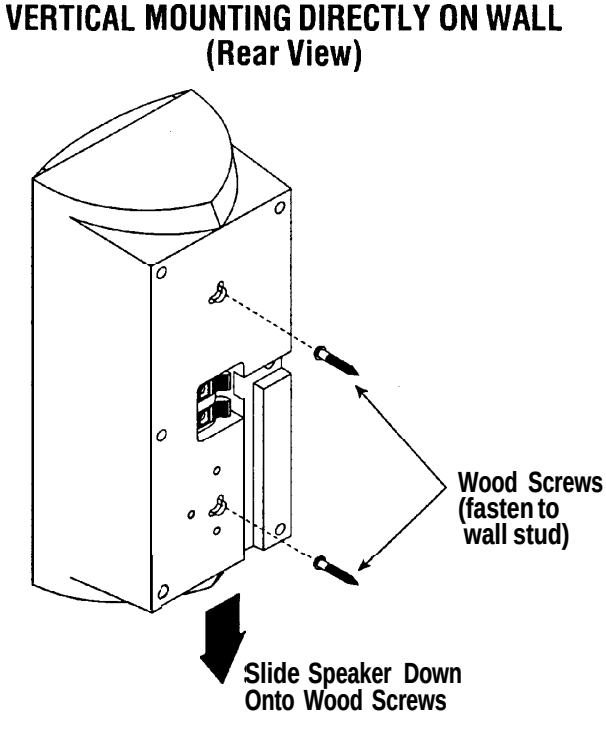

FIGURE 4. For vertical mounting of the L-MPS speaker directly on a wall, fasten the wood screws (not included) *to a* desired wall stud, leauing a *1/8" clearance between* the screw head and the wall. Rotate the L-MPS speaker vertically, *align* the keyholes on the *rear of the speaker* with the wood screws, *and slide speaker down.*

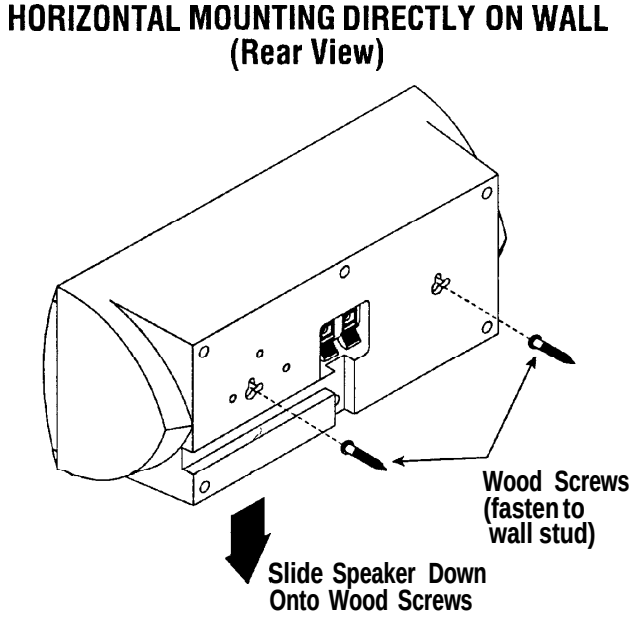

FIGURE 5. For horizontal mounting of the *L-MPS* speaker directly on *a* wall, fasten *the wood screws (not included) to a desired* wall stud, *leauing a 1/8"* clearance *between* the *screw* head *and the wall. Rotate the L-MPS speaker horizontally, align the* keyholes on the *rear of* the *speaker with* the wood screws, and slide *speaker down.*

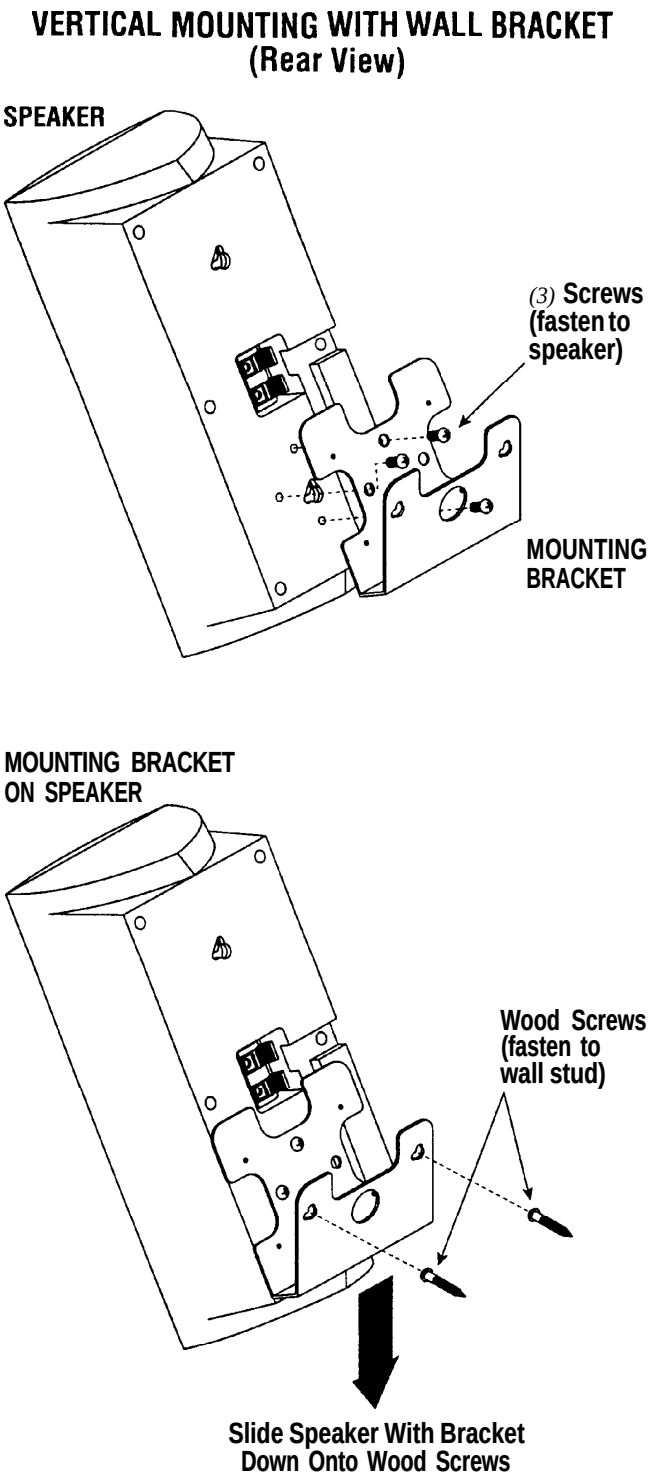

FIGURE 6. For *vertical mounting* of the *L-MPS* speaker on a wall using the enclosed bracket, *fasten* the bracket (as shown) with wood screws (not included) to a desired wall stud. *Leave* a *1/8"* clearance *between the screw head* and the wall. Then, *remove the* bracket and firmly attach *it* to the back of the speaker using the *enclosed screws*. Finally, align the bracket's keyholes with the wood *screws in* the *wall*, and slide the speaker (with bracket) down.

NOTE: The aboue illustration shows the L-MPS speaker being mounted with a downward tilt. Other orientations *are* possible by *rotating* the *mounting* bracket *before fastening* it to the *speaker.*

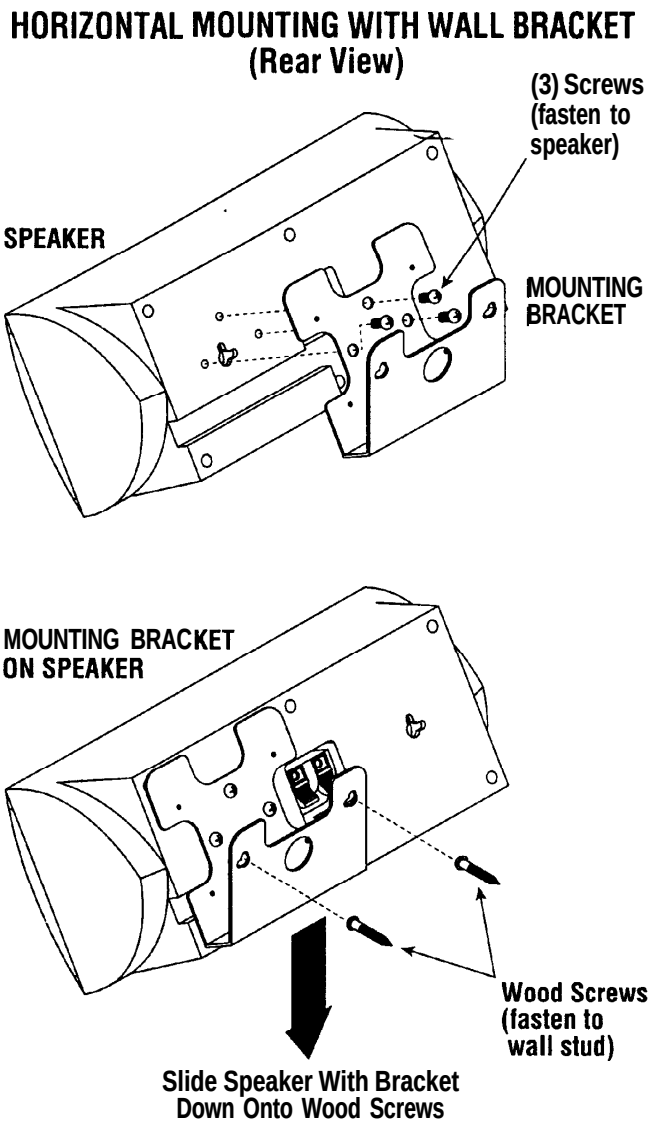

FIGURE 7. For *horizontal* mounting of the L-MPS speaker *on a wall* using the enclosed bracket, fasten the bracket *(as shown) with* wood screws (not included) to a desired wall stud. *Leave* a *1/8"* clearance between the *screw* head and the wall. *Then, remove the* bracket and firmly attach it to the back of the speaker using the enclosed screws. Finally, align the bracket's keyholes with the wood *screws in* the wall, and *slide the* speaker (with bracket) down.

NOTE: The aboue illustration shows *the* L-MPS speaker being mounted *with a downward tilt. Other orientations are* possible *by* rotating the mounting bracket *before* fastening it *to the speaker.*

WIRING THE SYSTEM

After placing the Miiuette L-MPS speakers, you are ready to wire your speakers. First turn off all audio system power. Use high-quality speaker wire (#16 gauge or heavier) to make your connections. Consult the owner's manuals that were included with your amplifier, receiver, or television to confirrn connection procedures.

Miiuette L-MPS speakers have spring-loaded terminals for easy wiring. Observe polarities when making speaker connections, as shown in Figure 8. Connect each + terminal on the back of the amplifier, receiver, or television to the respective + (red) terminal on each Minuette L-MPS speaker. Similarly, connect the – (black) terminal in the same way.

***IMPORTANT! Do not reverse* polarities (i.e., + to – or – to +) *when making connections. Doing so will* cause poor imaging and diminished bass response.**

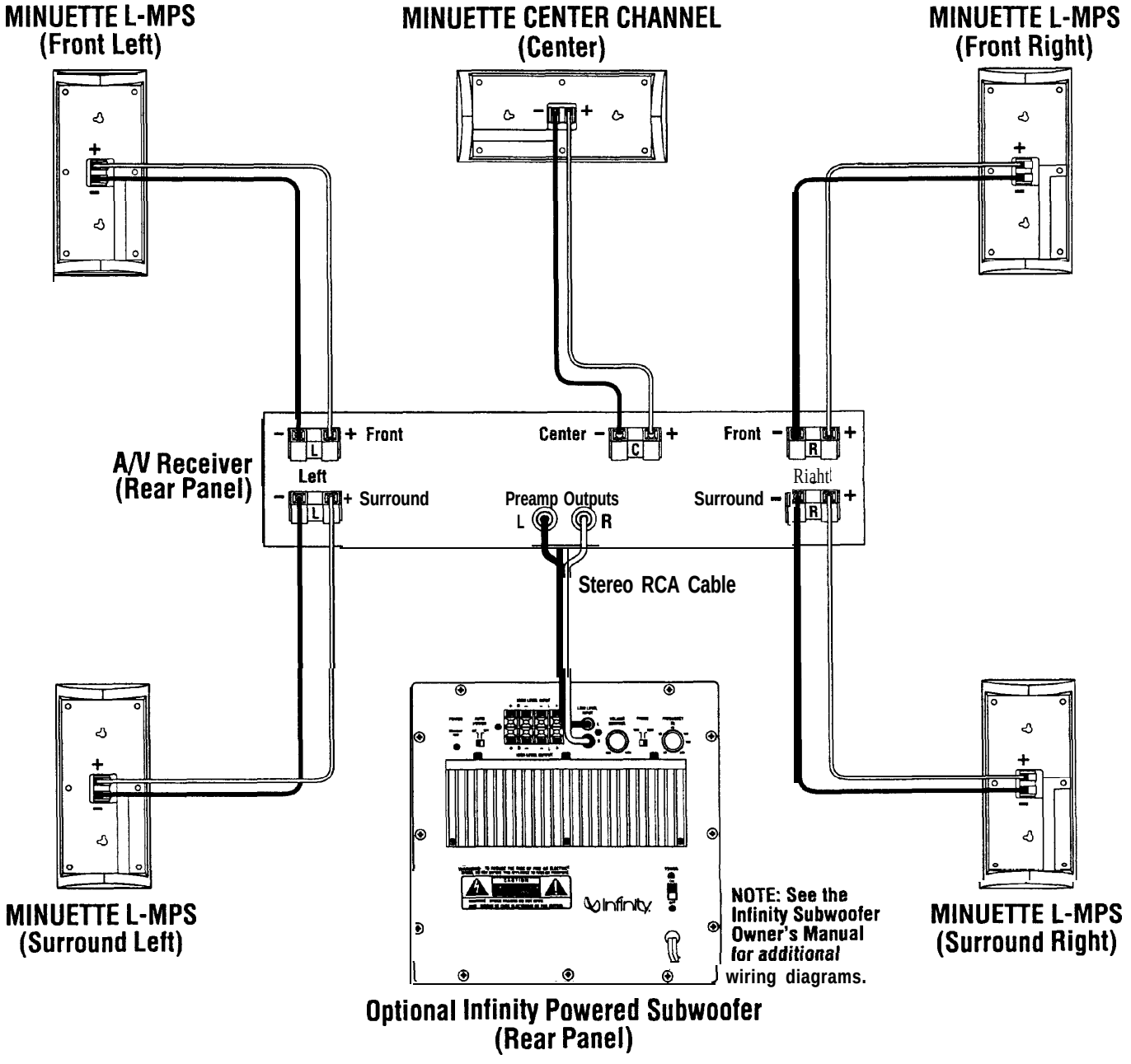

FIGURE 8. An example *of bow to interconnect L-MPS speakers to* an *A/V (audio/video) receiver* in a system.

UNDERSTANDING POWER RATINGS

An A/V (audio/video) receiver with limited power output can actually cause damage to your speakers. When played beyond its power capability, it will go into clipping. This generates spurious high-frequency signals which, when routed to the tweeter, can cause it to overheat and fail.

Overdriving the power amplifier must be avoided. It is always a good idea to choose a receiver with more power than you need. (Refer to power ratings in Specifications below.)

IN CASE OF TROUBLE

Before consulting your dealer, Infinity service facility or factory service department, you can perform simple troubleshooting. If the sound quality is distorted, listen to each speaker separately to check if the fault is present in both. If it is, then the trouble is likely to be elsewhere in your system. If the fault is in one channel only, switch the left and right speaker leads at the receiver. If the distortion moves to the other speaker, the fault is not in the speaker.

If there is no authorized service facility near you, contact the Service Department at Infinity Customer Service, 80 Crossways Park West, Woodbury, NY 11797, (516) 496-3400, and describe the problem as specifically as possible. The service department will advise you what action to take.

Note: Do not ship any parts or whole speakers *for service without prior* approval ("Return *Authorization"),* and do not ship without enclosing *a* copy of your *original* bill of sale and a description of the problem.

SPECIFICATIONS

L-MPS Speakers

Frequency Response ..... 180 Hz ~ 20 kHz
Crossover Frequency ..... .5 kHz
Sensitivity ..... .87 dB @ 2.85 V, 1 meter
Nominal Impedance ..... 8 ohms
Power Rating.. ..... .15 ~ 80 watts (rms)
Driver Complement .....(2) 3 1/2" paper-cone woofers
1/2" polycarbonate dome tweeter w/acoustic lens
Cabinet Finish ..... .black
Cabinet Dimensions* ..10 7/16" wide x 4 3/4" high x 3 3/4" deep
26.5 cm wide x 11.9 cm high x 9.4 cm deep
* Not including bracket

LIMITED WARRANTY

WHO IS PROTECTED BY THE **WARRANTY?**

Your Infinity warranty protects the original retail purchaser and all subsequent owners for a period of five (5) years (parts and labor) from any failure as a result of original manufacturing defect so long as: (1) your Infinity loudspeaker was purchased within the fifty United States or by military personnel from an authorized military outlet and (2) the original dated bill of sale is presented whenever service is required during the warranty period. This warranty does not apply to products purchased elsewhere; other purchasers should contact their local Infinity distributor for warranty information.

WHAT DOES THE **INFINITY** WARRANTY COVER?

Except as specified below, this warranty covers all defects in original materials and workmanship. The following are not covered: damage caused by accident, misuse, abuse, neglect, product modification; damage occurring during shipment; damage caused by failure to follow instructions in the owners manual, including failure to perform recommended periodic or routine maintenance; damage resulting from repairs by someone not authorized by Infinity; claims based upon any misrepresentations by the seller; and any Infinity product on which the serial number has been altered, defaced, or removed.

WHO PAYS FOR WHAT?

During the period of the warranty, subject to the above conditions, Infinity will pay all of the labor and material expenses to repair a warrantable defect.

HOW CAN WARRANTY SERVICE BE OBTAINED?

In the event that your Infinity loudspeaker should require service, you should first contact the Infinity dealer from whom the product was purchased or, if this is not practical, contact Infinity directly (ATTN: Customer Service) at 80 Crossways Park West, Woodbury, NY 11797, (516) 496-3400.

We may direct you to an authorized service center for Infinity products or ask you to send them to us for repair. In either case, you will have to present your original bill-of-sale to establish warranty coverage. Do not send your speaker to us without prior authorization from our Customer Service Department.

You are responsible for transporting your product to either Infinity or an authorized service center and for payment of all shipping charges; however, Infinity will pay the return shipping charges (in the event you return the product to us) if the repairs are covered by warranty,

If you experience difficulty in transporting you product or are in need of packing materials, please advise us and we may be able to suggest alternative procedures and/or provide adequate packing materials.

LIMITATION OF IMPLIED WARRANTIES:

All implied warranties, including fitness for a particular purpose and merchantability are limited in duration and length to the warranty period for your product.

LIMITATION OF INCIDENTAL OR CONSEQUENTIAL DAMAGES:

Infinity is not responsible for any incidental or consequential damage of any kind. Our liability is limited to the repair or replacement, at our option, of a defective product.

Some states do not allow limitations on how an implied warranty lasts and/or do not allow the exclusion of incidental or consequential damage, so the above limitations or exclusions may not apply to you.

This warranty gives you specific legal rights and you may also have other rights which vary from state-to-state.

NOTE: In the event that there is a difference between this warranty and the provisions in any advertisements, product brochures or packaging cartons, the terms of this warranty will prevail.

Infinity

© 1997, Infinity Systems, Inc., 80 Crossways Park West, Woodbury, NY 11797 U.S.A.
(5 16) 496-3400 • FAX: (516) 496-4868
www.infinitysystems.com

Infinity constantly strives to update and improve existing products, as well as create new ones. therefore the specifications and construction detak in this and related infinity publications are subject to change without notice.

P/N 939-8087

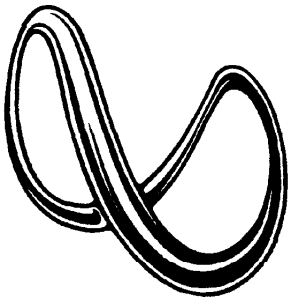

Infinity®

micro subwoofer

Audio/Video Subwoofer

OWNER'S MANUAL

UNPACKING

Inspect your subwoofer carefully after unpacking. If it has been damaged in transit, call your dealer or the trucking firm that delivered it for instructions on how to file a claim.

CONNECTING THE SYSTEM

NOTE: Make sure all equipment is turned off before making connections.

CONNECTING THE SUBWOOFER WITH SATELLITES

The Micro Subwoofer is a passive subwoofer (does not have a power amplifier built into the enclosure) and can be used with any quality stereo integrated amplifier, receiver, or separate components. Observe the following procedures for installing the subwoofer.

1. Connect Left and Right OUTPUTS of your amplifier to the corresponding Left and Right INPUT terminals on the subwoofer.
2. Connect satellites to the Left and Right OUTPUT terminals on the subwoofer.
3. Observe polarity.
4. Refer *to diagram below* for hook-up instructions.

DIAGRAM

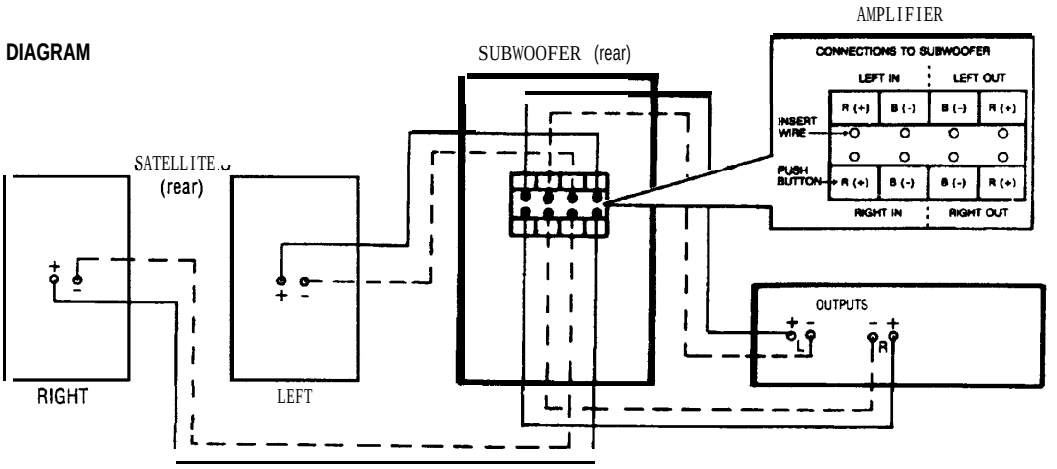

NOTE: You may also connect your amplifier output (Left & Right) directly to the satellites, then connect the satellites to the subwoofer Left & Right inputs. Observe polarity.

POSITIONING OF THE SUBWOOFER

The performance of the Micro subwoofer is directly related to it's position in the listening room. At times, moving the subwoofer merely an inch or two can make a significant difference in the way it will sound.

If bass response is judged to be light, move the subwoofer closer to a comer. The comer enhances the subwoofer's ability to couple to the room and will create more bass. If bass response is judged too heavy, move the subwoofer away from the wall or comer.

The subwoofer does not have to be positioned between the two satellites for best overall sonic balance. It may be placed anywhere it sounds best. Low frequencies are non-directional which means you can place the subwoofer either in the middle or to the left or right of the satellites and obtain optimum bass balance. Experimentation by positioning the subwoofer in several different locations will reveal which position yields optimum results.

NOTE: The subwoofer may be mounted vertically or horizontally, but do not mount it so the port faces the floor. The port must remain unobstructed for proper performance.

A WORD OF ADVICE

It is not advisable to operate the Micro Subwoofer (and satellites) with the tone controls of your stereo system set to maximum boost. In fact, it is always good practice to keep the tone controls set to reasonable boost levels because excessive bass and treble can damage your satellites as well as the subwoofer.

The volume control settings on your stereo preamplifier, receiver or integrated amplifier is not an indication of the overall volume level of your system. The only important consideration is the loudness level at which the system can be played regardless of where the volume control is set.

Always turn down the volume when changing a record or switching inputs from AM to FM, phono or CD operation. Excessively loud transients (loud pops and clicks) can damage your speakers. Whenever changing plugs, cables, etc., always turn off your system. This will prevent transients form reaching your speakers and also prevents electrical energy from reaching you. Keep electrical connections out of reach of children.

ACOUSTIC FEEDBACK

Acoustic feedback is created when sound waves from speakers reach a phono turntable and are fed back through the phono pickup to the power amplifier. It is a never ending cycle which can cause distortion across the entire audio band. To avoid acoustic feedback problems, place your turntable on a heavy, solid support and as far away from the speakers as possible. At times, isolating the turntable with special rubber mounts may aid in reducing this form of distortion.

UNDERSTANDING MIN/MAX POWER RATINGS

An amplifier with limited power output can actually cause damage to your speakers. A lower powered amplifier, when played beyond it power capability, will clip. This generates spurious high frequency signals which, when routed to the tweeter, can cause it to overheat and fail. It is for this reason that choosing an amplifier with higher power is always a wise choice.

SPECIFICATIONS

MICRO SUBWOOFER

Power Rating	100 watts per channel, RMS
Frequency Response	45 Hz to 150 Hz
Sensitivity	90 dB @ 2.8 volts, 1 meter
Nominal Impedance	compatible with 4 ohms

IN CASE OF TROUBLE WITH YOUR STEREO SYSTEM

Note that you can use your amplifier's two channels of information for simple trouble-shooting. If the sound quality is distorted, listen to each speaker separately to check if the fault is present in both. If it is, then the trouble is likely to be elsewhere in your system. If the fault is in one channel only, reverse the outputs from your amplifier to the speakers (right-to-left and left-to-right). If the distortion moves to the other channel, the fault is not in the speaker. (This technique may also be used to locate a fault between the signal source and preamp / receiver and / or between preamp and power amp(s).If you have been unsuccessful in locating the specific source of trouble (or if you have located it, but have been unable to correct it), make inquiries in the following order:

- Consult the Authorized Infinity Dealer from whom you purchased the system. Infinity Dealers are audio specialists and can be of great assistance.

DECLARATION OF CONFORMITY

CE

We, Infinity Systems A/S
Kongevejen 194B
DK-3460 Birkerød
DENMARK

declare in own responsibility, that the product described in the owner's manual is in compliance with tecnical standards:
EN 50 081 – 1/1992
EN 50 082 – 1/3. 1995

Steen Michaelsen
Infinity Systems A/S
Birkerød, Denmark 09/98

NOTE: DO NOT SHIP ANY PARTS OR WHOLE SPEAKERS FOR SERVICE WITHOUT PRIOR APPROVAL ("RETURN AUTHORIZATION"), AND DO NOT SHIP WITHOUT ENCLOSING A COPY OF YOUR ORIGINAL BILL OF SALE.



We get you back to what it's all about. Music.

© 1995 Infinity Systems, Inc. 20630 Nordhoff St., Chatsworth, CA 91311
(818) 407-0228 • FAX (818) 709-0486

Infinity strives constantly to update and improve existing products, as well as create new ones, therefore, the specifications and construction details in this and related Infinity publications are subject to change without notice.

Printed on recycled paper

MADE IN DENMARK

P/N 9471095