TERMOPTO
TOP 24VDC/48VDC 0,1A

Weidmüller Interface GmbH & Co. KG
Klingenbergstraße 16
D-32758 Detmold
Germany
Fon: +49 5231 14-0
Fax: +49 5231 14-292083
www.weidmueller.com



TERMOPTO solid-state relay 5 to 48 VDC 0.1 A output version,
with AC or DC input, available in different versions:

- With PUSH IN connection
- In 6.1 mm width
- With various input protection circuits (free-wheel diode, varistor)
- Pluggable cross-connections
- Enclosed design

General ordering data

Type	TOP 24VDC/48VDC 0,1A
Order No.	8950780000
Version	TERMOPTO, solid-state relais, 1 NO contact (Transistor), Rated control voltage: 24 V DC ±20 % , Rated switching voltage: 5...48 V DC, Continuous current: 100 mA, PUSH IN
GTIN (EAN)	4032248742158
Qty.	10 pc(s).

TERMOPTO
TOP 24VDC/48VDC 0,1A

Weidmüller Interface GmbH & Co. KG
Klingenbergstraße 16
D-32758 Detmold
Germany
Fon: +49 5231 14-0
Fax: +49 5231 14-292083
www.weidmueller.com

Technical data

Dimensions and weights

Width	6.1 mm	Width (inches)	0.24 inch
Height	79.4 mm	Height (inches)	3.126 inch
Depth	55 mm	Depth (inches)	2.165 inch
Net weight	19.4 g		

Temperatures

Humidity	5-95% relative humidity, T_u = 40°C, without condensation	Operating temperature, max.	60 °C
Operating temperature, min.	-20 °C	Storage temperature, max.	80 °C
Storage temperature, min.	-40 °C	Operating temperature	-20 °C...60 °C
Storage temperature	-40 °C...80 °C		

Probability of failure

MTTF	2,500 Years

Environmental Product Compliance

REACH SVHC	Lead 7439-92-1

Control side

Rated control voltage	24 V DC ±20 %	Nominal control current	7 mA DC
Power rating	≤ 170 mW	Cut-in / dropout voltage	19.2 V / 6 V DC
Status indicator	Green LED	Protective circuit	Varistor, Reverse polarity protection

Load side

Rated switching voltage	5...48 V DC	Continuous current	100 mA
Rated switching current	100 mA	Load category	DC1
Switch-on delay	< 13 µs	Switch-off delay	< 42 µs
Voltage drop at max. load	< 1 V	Leakage current	< 10 µA
Min. switching current	100 µA	Short-circuit-proof	No
Protective circuit, load side	Free-wheeling diode	max. switching frequency (DC control voltage)	3,000 Hz

Contact data

Contact type	1 NO contact (Transistor)

General data

Rail	TS 35	Colour	black
UL 94 flammability rating	V-0		

TERMOPTO
TOP 24VDC/48VDC 0,1A

Weidmüller Interface GmbH & Co. KG
Klingenbergstraße 16
D-32758 Detmold
Germany
Fon: +49 5231 14-0
Fax: +49 5231 14-292083
www.weidmueller.com

Technical data

Insulation coordination

Rated voltage	300 V	Pollution severity	2
Surge voltage category	III	Clearance and creepage distances for control side - load side	> 3 mm
Dielectric strength for control side - load side	1.2 kV_{eff} / 1 min.	Impulse withstand voltage	4 kV (1.2/50 µs)
Protection degree	IP20		

Further details of approvals / standards

Standards	DIN EN 50178, IEC 62314, UL508	Certificate no. (cULus)	E223474

Connection data

Wire connection method	PUSH IN	Stripping length, rated connection	10 mm
Clamping range, rated connection	1.5 mm²	Clamping range, min.	0.5 mm²
Clamping range, max.	2.5 mm²	Wire connection cross section AWG, min.	AWG 20
Wire connection cross section AWG, max.	AWG 14	Wire cross-section, solid, min.	0.5 mm²
Wire cross-section, solid, max.	1.5 mm²	Wire connection cross-section, finely stranded, min.	0.5 mm²
Wire connection cross section, finely stranded, max.	1.5 mm²	Wire cross-section, finely stranded, min. (AWG)	AWG 20
Wire cross-section, finely stranded, max. (AWG)	AWG 14	Wire connection cross-section, finely stranded with wire-end ferrules DIN 46228/4, min.	0.5 mm²
Wire connection cross-section, finely stranded with wire-end ferrules DIN 46228/4, max.	1.5 mm²	Conductor cross-section, flexible, AEH (DIN 46228-1), min.	0.5 mm²
Conductor cross-section, flexible, AEH (DIN 46228-1), max.	1.5 mm²	Blade size	0.6 x 3.5 mm

Classifications

ETIM 3.0	EC001504	ETIM 4.0	EC001504
ETIM 5.0	EC001504	ETIM 6.0	EC001504
eClass 5.1	27-27-09-90	eClass 6.2	27-27-09-90
eClass 7.1	27-27-09-90	eClass 8.1	27-27-09-90
eClass 9.0	27-37-16-04	eClass 9.1	27-37-16-04

Approvals

Approvals

ROHS	Conform

TERMOPTO
TOP 24VDC/48VDC 0,1A

Weidmüller Interface GmbH & Co. KG
Klingenbergstraße 16
D-32758 Detmold
Germany
Fon: +49 5231 14-0
Fax: +49 5231 14-292083
www.weidmueller.com

Technical data

Downloads

Approval/Certificate/Document of Conformity	DE_PA_5600_160301_001.pdf
Brochure/Catalogue	CAT 4.2 ELECTR 18/19 EN
Engineering Data	EPLAN, WSCAD
Engineering Data	STEP
User Documentation	Operating Instructions

TERMOPTO
TOP 24VDC/48VDC 0,1A

Weidmüller Interface GmbH & Co. KG
Klingenbergstraße 16
D-32758 Detmold
Germany
Fon: +49 5231 14-0
Fax: +49 5231 14-292083
www.weidmueller.com

Drawings

Wiring diagram

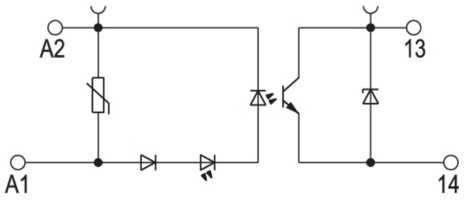

Schaltsymbol

Dimensional drawing

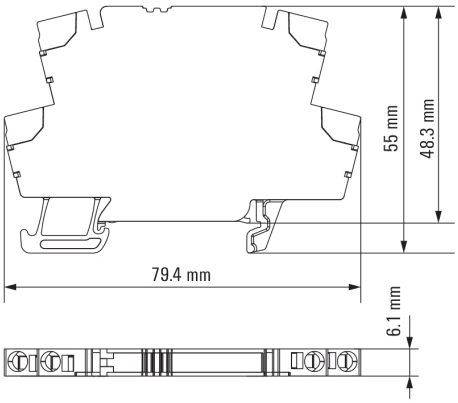

Correct handling PUSH IN connection

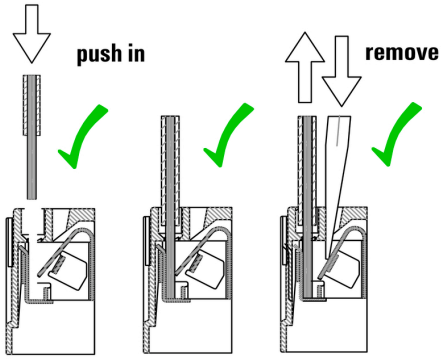

Wrong handling PUSH IN connection

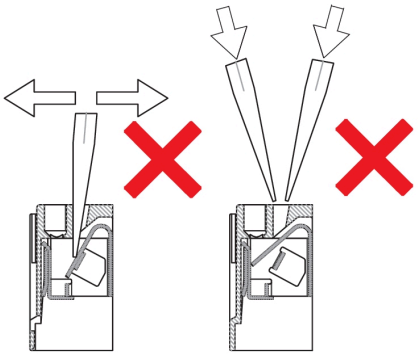

Recommended screwdriver

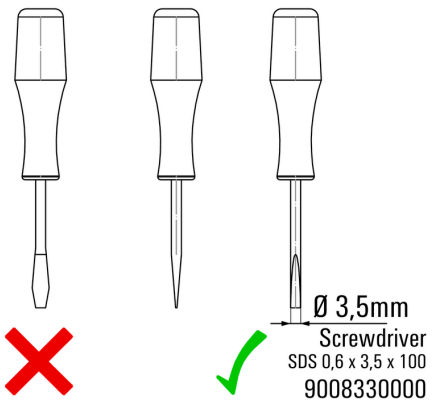

TERMOPTO
TOP 24VDC/48VDC 0,1A

Weidmüller Interface GmbH & Co. KG
Klingenbergstraße 16
D-32758 Detmold
Germany
Fon: +49 5231 14-0
Fax: +49 5231 14-292083
www.weidmueller.com

Drawings

Miscellaneous

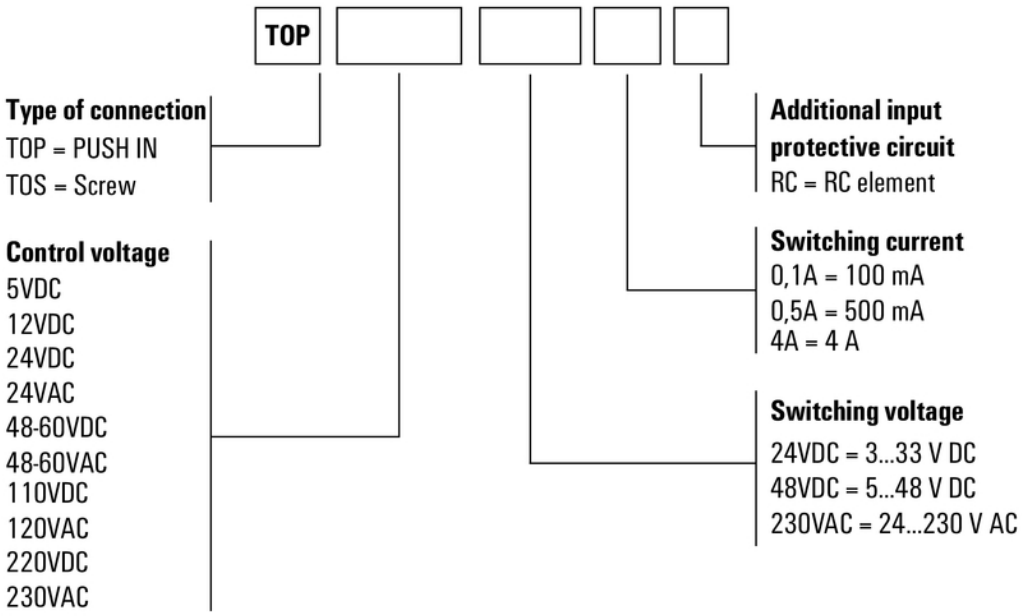

Type codes