DCS / DCT / DCU / DCA Thick Film

- **State of the Art Thick Film Technology**
- **Improved Termination Design**
- **Standard TC: 100 and 200 ppm/K**
- **Tight Tolerance available: 1 %**
- **Sizes**

CECC:	**0402**	**0603**	**0805**	**1206**
EIA:	**1005**	**1608**	**2012**	**3216**

DCS, DCT, DCU and DCA Thick Film Flat Chip Resistors are made for all general purpose applications. They are typically used in the production of office automation equipment and consumer electronics.

The production of the **DCS**, **DCT**, **DCU** and **DCA Thick Film Flat Chip Resistors** is performed in a mass volume production site. A thick film is screen printed on a high grade alumina ceramic substrate to form the resistive layer. Pre contacts are printed on both sides of the substrate. The resistors are laser trimmed to the target value. The resistor elements are covered by glass and a protective coating combined for superior electrical, mechanical and climatic protection. The prepared terminations receive an electroplating of PbSn solder on nickel plating. A three or four digit code designates the nominal resistance value.

The result of the determined production is verified by a final test performed on 100 % of the individual chip resistors. Only accepted products are laid directly into the paper tape according to **IEC 60 286-3**.

The resistors are suitable for processing on automatic SMD assembly systems. They are suitable for automatic soldering using wave, reflow or vapour phase. The encapsulation is resistant to all cleaning solvents commonly used in the electronics industry, including alcohols, esters and aqueous solutions.

The resistors are tested according to **IEC 60 115** and **IEC 60 068**. They meet most of the requirements of **CECC 40 401-802** and **EN 140 400**.

This product family of thick film flat chip resistors is complemented by **Zero Ohm Jumpers**.

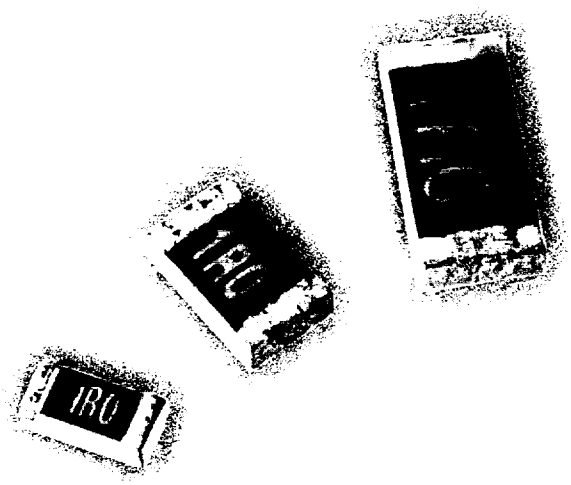

Temperature Coefficient and Resistance Range

	Tolerance	IEC Series	DCS 0402	DCT 0603	DCU 0805	DCA 1206
TC 200	**5 %**	E24	10 Ω - 1 MΩ	1 Ω - 6,8 MΩ	1 Ω - 10 MΩ	1 Ω - 10 MΩ
	1 %	E24 and E96	–	–	1 Ω - 9,76 Ω 1,02 MΩ - 10 MΩ	1 Ω - 9,76 Ω 1,02 MΩ - 10 MΩ
TC 100	**1 %**	E24 and E96	–	–	10 Ω - 1 MΩ	10 Ω - 1 MΩ
Jumper			≤ 50 mΩ I_{max} = 0,8 A	≤ 50 mΩ I_{max} = 0,8 A	≤ 50 mΩ I_{max} = 1,1 A	≤ 50 mΩ I_{max} = 1,6 A

Electrical Data

Style		DCS 0402	DCT 0603	DCU 0805	DCA 1206
Climatic Category		55 / 125 / 56	55 / 125 / 56	55 / 125 / 56	55 / 125 / 56
Operation Mode (see A4)		Standard	Standard	Standard	Standard
Film Temperature	°C	125	125	125	125
Specified Lifetime	h	8 000	8 000	8 000	8 000

The specification for standard operation mode ensures a maximum temperature of 110 °C at the solder joint on test boards according to **CECC 00 802**

Thermal Resistance R_{th}	K/W	880	880	440	220
Rated Dissipation P_{70}	W	0,063	0,063	0,125	0,25

Voltage Pulse Load Capability					
Pulse Voltage, U_{max}	V	up to 100	up to 150	up to 300	up to 400
Single Pulse IEC 1,2 / 50	V	–	–	–	–
Energy Pulse Load Capability					
Single Pulse, P_{max}	W	up to 3	up to 4	up to 6	up to 10
Continuous Pulses, P_{max}	W	up to 0,7	up to 1	up to 1,3	up to 2
Current Noise, A_1	µV/V	down to 0,5	down to 0,5	down to 0,5	down to 0,5
Attenuation 3rd Harmonic, A_3	dB	–	up to 70	up to 80	up to 100

Max. Resistance Change at P_{70} for Resistance Range		10 Ω - 1 MΩ	10 Ω - 1 MΩ	10 Ω - 1 MΩ	10 Ω - 1 MΩ
Δ R/R after ...					
... 1 000 h	%	≤ 3	≤ 1,5	≤ 1,5	≤ 1,5
... 8 000 h	%	≤ 6	≤ 3	≤ 3	≤ 3

Operating Voltage, U_{max} AC / DC	V	50	50	150	200
Permissible Voltage against Ambient ...					
... 1 minute	V	75	150	150	200
... continuous	V	75	75	75	75
Isolation Resistance	Ω	10^9	10^9	10^9	10^9

Derating • Standard Operation

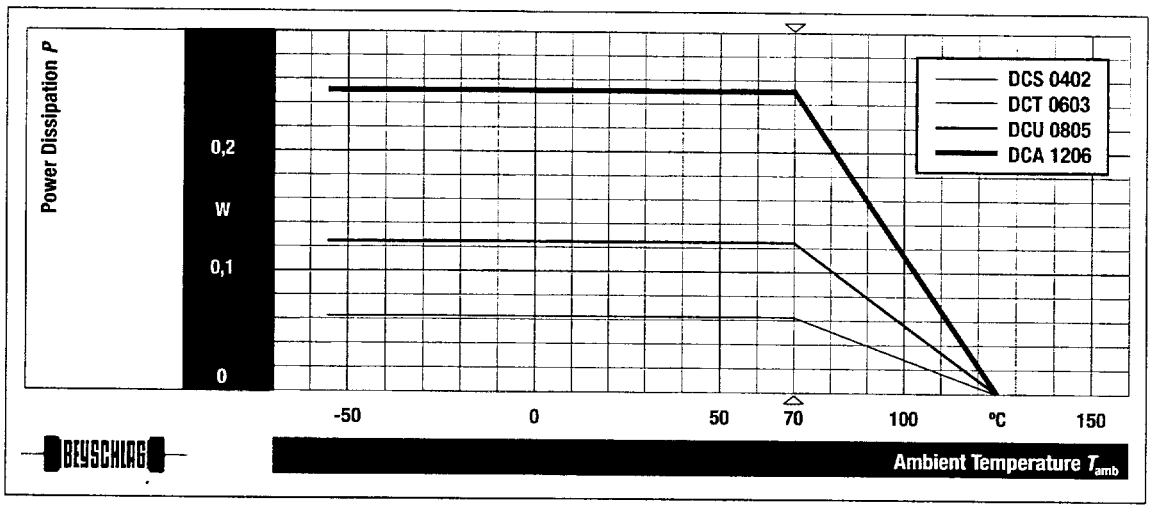

Single Pulse

Maximum Pulse Load (single pulse; see A2)

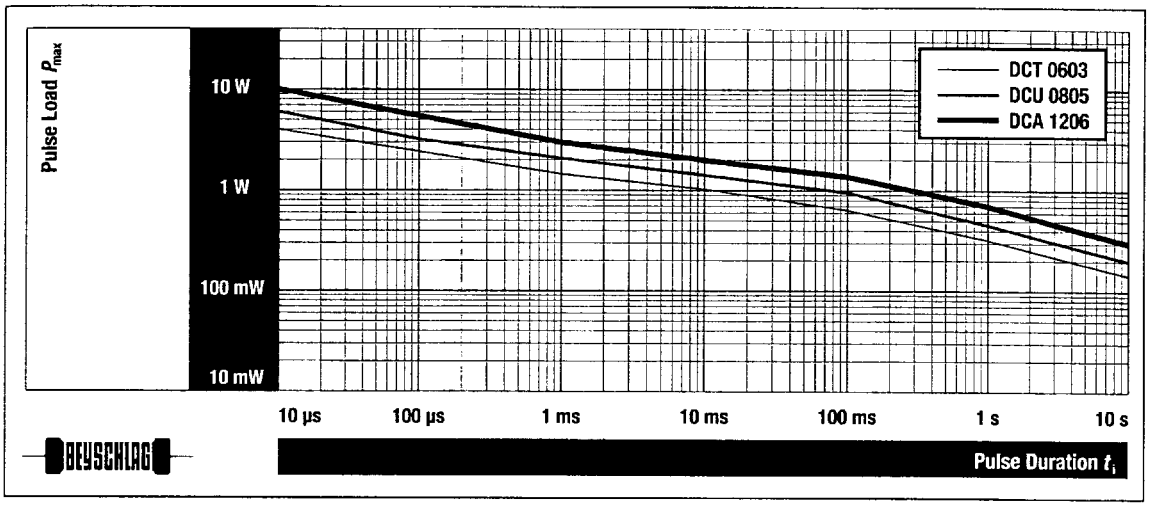

Continuous Pulses

Maximum Pulse Load (continuous pulses; see A2)

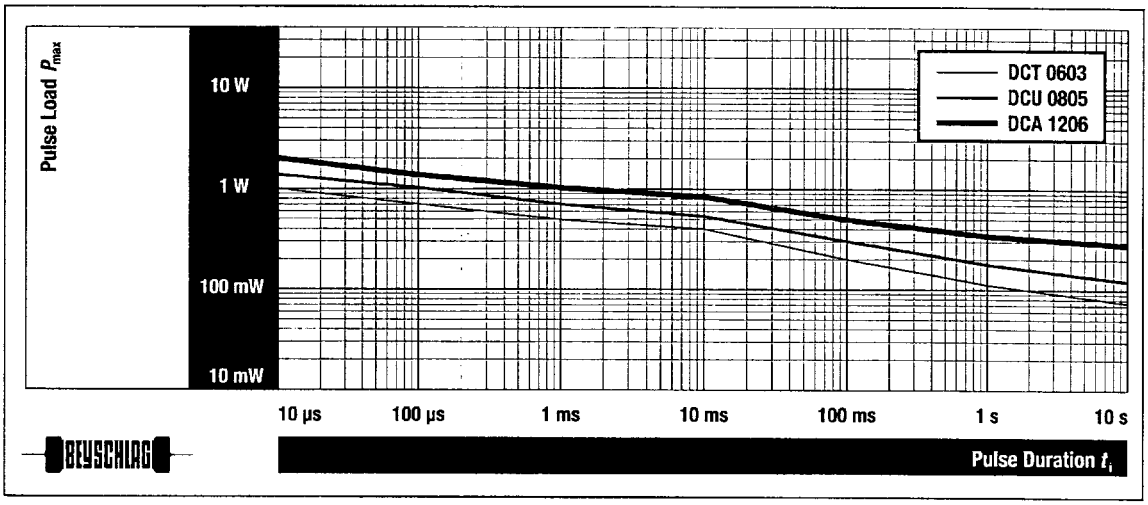

Pulse Load Voltage

Maximum Pulse Voltage (single and continuous pulses; see A2)

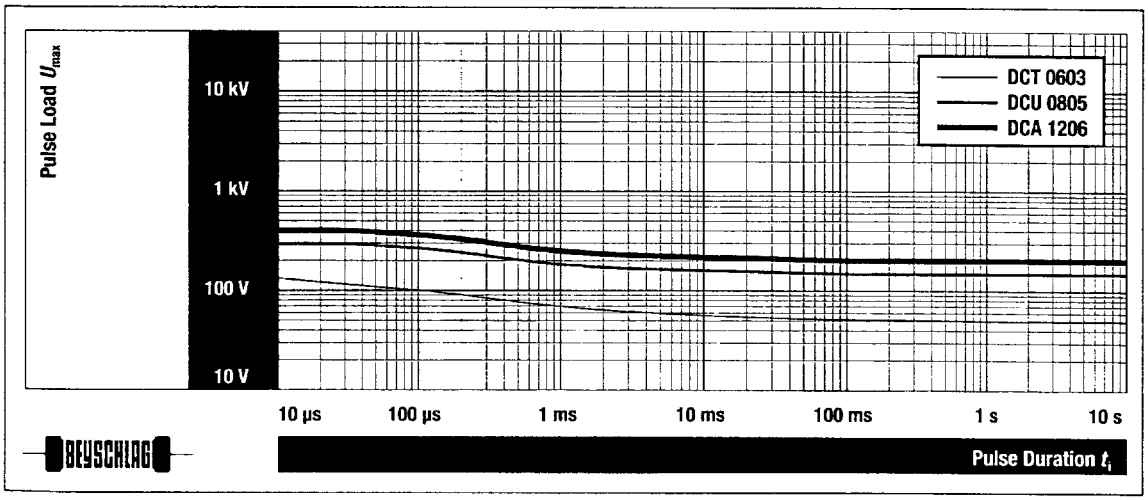

Introduction to BEYSCHLAG
Product Overview
Flat Chip Resistor Products
MELF Resistor Products
Leaded Resistor Products
Resistor Arrays and Networks
Engineering Sample Kits
Appendices and Glossary
Distribution Network

Current Noise

Current Noise A_1, IEC 60 195

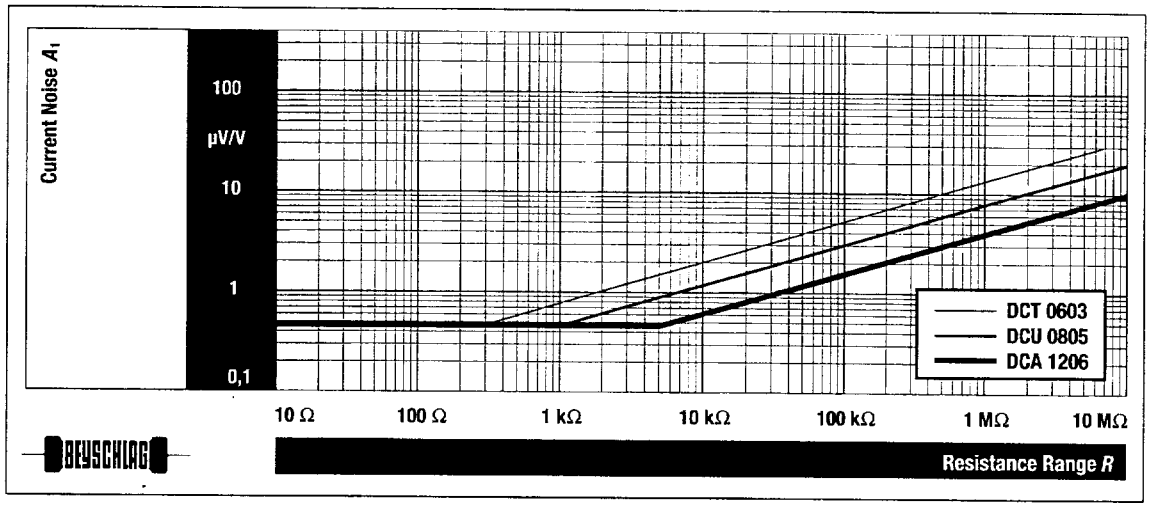

Nonlinearity

Nonlinearity A_3, IEC 60 440

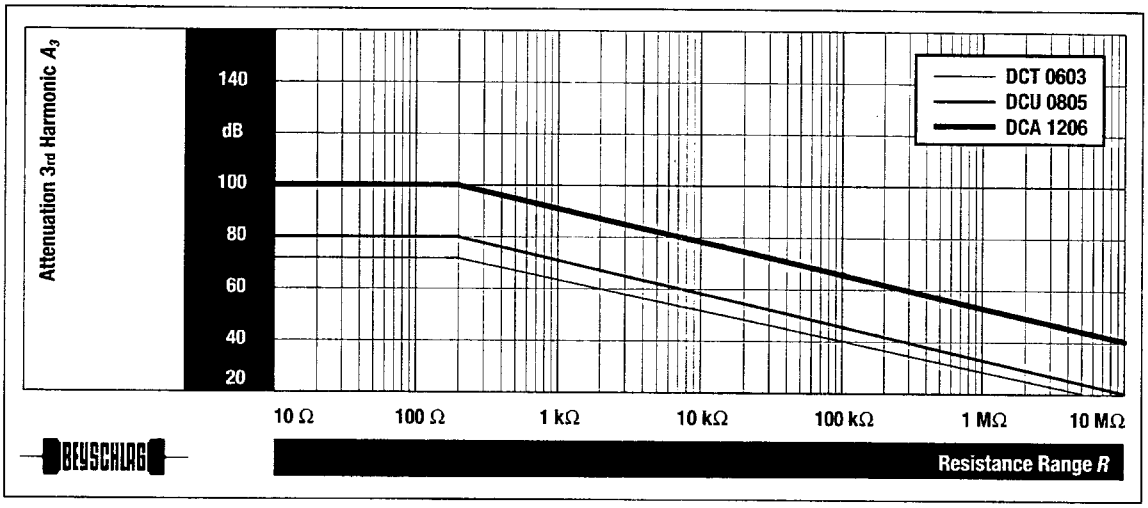

Performance Characteristics

BEYSCHLAG Flat Chip Resistor Products fulfill the requirements of the following specifications:

EN 140 000 Generic specifications: Fixed Resistors
EN 140 400 Sectional specifications: Fixed low power non-wirewound Resistors

Tests

	IEC 60 115-1 Clause	IEC 60 068-2- (Method)	Test Condition	Permissible Change Δ R		
			DCS 0402	-	-	≤ 1 MΩ
			DCT 0603	≤ 1 MΩ	> 1 MΩ	-
			DCU 0805	≤ 1 MΩ	> 1 MΩ	-
			DCA 1206	≤ 1 MΩ	> 1 MΩ	-
Short-Time Overload *)	4.13		2,5 x rated voltage / 2 x U_{max} for 2 s	± (1%R+0,05Ω)	± (1%R+0,05Ω)	± (2%R+0,1Ω)
Resistance to Soldering Heat	4.18.2	20 (Tb)	+ 260 °C / 10 s	± (0,5%R+0,05Ω)	± (0,5%R+0,05Ω)	± (1%R+0,1Ω)
Rapid Change of Temperature *)	4.19	14 (Na)	5 cycles between - 55 °C / + 125 °C	± (0,5%R+0,05Ω)	± (0,5%R+0,05Ω)	± (2%R+0,1Ω)
Endurance at ...	4.25.1		Rated voltage / U_{max} 1,5 h on / 0,5 h off			
... +70 °C / 1 000 h				± (1,5%R+0,1Ω)	± (3%R+0,1Ω)	± (3%R+0,1Ω)
Climatic Sequence *)	4.23	30 (D)	Dry heat – damp heat (1 cycle) – cold – low air pressure – damp heat (5 cycles)	± (1,5%R+0,1Ω)	± (3%R+0,1Ω)	± (1%R+0,1Ω)
Damp Heat, Steady State 56 Days *)	4.24	3 (Ca)	+ 40 °C / 93 % R.H.	± (1,5%R+0,1Ω)	± (3%R+0,1Ω)	± (3%R+0,1Ω)
Endurance at UCT / 1 000 h	4.25.3	27 (Ba)				
UCT = + 125 °C				± (1,5%R+0,1Ω)	± (3%R+0,1Ω)	± (3%R+0,1Ω)

				Requirements
Terminal Adhesion (shear test)			CECC 00 802 / B.2 5 N / 10 s	No visible damage
Voltage Proof (dielectric with-standing voltage)	4.7		V_{rms} = 100 V / 60 s	No flashover or breakdown
Solderability	4.17.2	20 (Ta)	+ 215 °C / 3 s	Dipped area shall be covered with a smooth and bright solder coating of at least 95 %
Resistance against Solvents *)		45 (xA)	Alcohols, ester, hydrous solution, + 23 °C, tooth brush method	No mechanical damage Marking must be legible

***) Resistors mounted on a test board according to CECC 00 802**

Introduction to BEYSCHLAG
Product Overview
Flat Chip Resistor Products
MELF Resistor Products
Leaded Resistor Products
Resistor Arrays and Networks
Engineering Sample Kits
Appendices and Glossary
Distribution Network

Product Dimensions • Thin Film Chip Resistors

Style		MCS 0402	MCT 0603 OCT 0603 NCT 0603 TCT 0603	MCU 0805 OCU 0805 NCU 0805 TCU 0805	–
CECC - Size		RR 0402	RR 0603	RR 0805	–
EIA - Size		1005	1608	2012	–
H	mm	min 0,27 / max 0,37	min 0,4 / max 0,55	min 0,4 / max 0,55	–
L	mm	min 0,95 / max 1,05	min 1,5 / max 1,6	min 1,9 / max 2,1	–
W	mm	min 0,45 / max 0,55	min 0,75 / max 0,95	min 1,1 / max 1,4	–
W_T	mm	min 75 % of W	min 75 % of W	min 75 % of W	–
T_1	mm	min 0,1 / max 0,3	min 0,2 / max 0,45	min 0,2 / max 0,5	–
T_2	mm	min 0,15 / max 0,3	min 0,2 / max 0,45	min 0,2 / max 0,5	–
Weight	mg	0,8	1,5	3,2	–

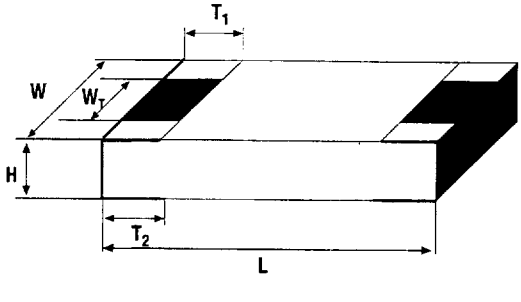

Product Dimensions • Thick Film Chip Resistors

Style		DCS 0402	DCT 0603	DCU 0805	DCA 1206
CECC - Size		RR 0402	RR 0603	RR 0805	RR 1206
EIA - Size		1005	1608	2012	3216
H	mm	min 0,3 / max 0,4	min 0,35 / max 0,55	min 0,45 / max 0,55	min 0,45 / max 0,55
L	mm	min 0,95 / max 1,05	min 1,5 / max 1,7	min 1,85 / max 2,15	min 3,0 / max 3,3
W	mm	min 0,45 / max 0,55	min 0,75 / max 0,95	min 1,1 / max 1,4	min 1,45 / max 1,75
W_T	mm	–	min 0,75 / max 0,95	min 1,1 / max 1,4	min 1,45 / max 1,75
T_1	mm	min 0,1 / max 0,35	min 0,1 / max 0,5	min 0,2 / max 0,6	min 0,2 / max 0,75
T_2	mm	min 0,15 / max 0,35	min 0,1 / max 0,5	min 0,2 / max 0,6	min 0,25 / max 0,75
Weight	mg	0,52	2,5	5,5	10,0

PCB Layout Recommendations • Reflow Soldering

CECC - Size		0402	0603	0805	1206
EIA - Size		1005	1608	2012	3216
B	mm	0,65	1,0	1,5	1,9
P	mm	0,4	0,5	0,7	1,0
G	mm	0,4	1,0	1,2	1,8
A	mm	1,2	2,0	2,6	3,8

The used soldering process determines the optimum pad size.
The pad size has an influence on the achievable power dissipation.
Alternative recommendations and comprehensive information are given in the American standard IPC-SM-782:
Surface Mount Design and Land Pattern Standard.

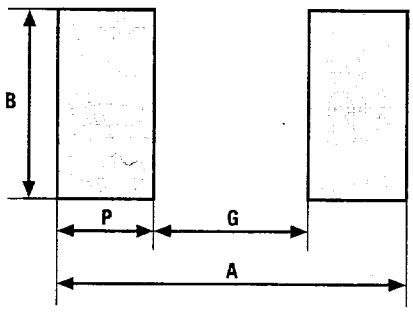

PCB Layout Recommendations • Wave Soldering

CECC - Size		0402	0603	0805	1206
EIA - Size		1005	1608	2012	3216
B	mm	–	1,2	1,6	2,0
P	mm	–	0,6	0,9	1,2
G	mm	–	1,0	1,2	1,8
A	mm	–	2,2	3,0	4,2

The used soldering process determines the optimum pad size.
The pad size has an influence on the achievable power dissipation.
Alternative recommendations and comprehensive information are given in the American standard IPC-SM-782:
Surface Mount Design and Land Pattern Standard.

Resistance Coding

Style	MCS 0402	MCT 0603	MCU 0805	
		OCT 0603	OCU 0805	
		NCT 0603	NCU 0805	
	DCS 0402	DCT 0603	DCU 0805	DCA 1206
Marking of Resistance Values – Coding	– –	E24: 3 digits E96: 4 digits	E24: 3 digits E96: 4 digits	E24: 3 digits E96: 4 digits

According to **IEC 60 062**

Packaging Information for MFC Series

Style			MCS 0402	MCT 0603	MCU 0805	–
				OCT 0603	OCU 0805	
				NCT 0603	NCU 0805	
				TCT 0603	TCU 0805	
Paper Tape	P1*	pcs.	–	1 000	1 000	–
	* precision only					
Paper Tape	P5	pcs.	–	5 000	5 000	–
Paper Tape	E0	pcs.	10 000	–	–	–
Bulk Case	M	pcs.	–	to be announced	to be announced	–

Packaging Information for DFC Series

Style			DCS 0402	DCT 0603	DCU 0805	DCA 1206
Paper Tape	PW	pcs.	–	20 000	20 000	20 000
Paper Tape	PA	pcs.	–	5 000	5 000	5 000
Paper Tape	E0	pcs.	10 000	–	–	–

Order Code Example

M C T 0603 - 50 1% P5 10 k

Film Type

M = Metal and Cermet
O = High Ohmic
N = Low Ohmic
T = Trimmable
D = Thick Film

Product Type

C = Flat Chip

BEYSCHLAG Style

S = 0402
T = 0603
U = 0805
A = 1206

CECC - Size

RR 0603

Resistance Value

10 kΩ

Packaging

P5 = 5 000 pieces papertape / reel

see packaging information

Tolerance

Nominal Value ± 1%

Temperature Coefficient

0 ± 50 · 10^{-6}/K

Jumpers are ordered by the resistance value 0 Ω, e.g. **MCT 0603 P5 0R0**.
A temperature coefficient 100 is marked -00, higher T.C. values are not specified.

Introduction to BEYSCHLAG
Product Overview
Flat Chip Resistor Products
MELF Resistor Products
Leaded Resistor Products
Resistor Arrays and Networks
Engineering Sample Kits
Appendices and Glossary
Distribution Network

Reel for MFC Series

Style		MCS 0402	MCT 0603		MCU 0805		–	
			OCT 0603		OCU 0805			
			NCT 0603		NCU 0805			
			TCT 0603		TCU 0805			
		E0	P1	P5	P1	P5	–	–
A	mm	180	180		180		–	
E	mm	2,5 ± 0,5					–	
D	mm	22,5 ± 2,0					–	
W_1	mm	$8,4\ ^{+1,5}_{0}$					–	
C	mm	$13,0\ ^{+0,5}_{-0,25}$					–	
N	mm	62					–	
W_2	mm	max 14,4					–	

According to **IEC 60 286-3**

Reel for DFC Series

Style		DCS 0402	DCT 0603		DCU 0805		DCA 1206	
		E0	PA	PW	PA	PW	PA	PW
A	mm	180	180	330	180	330	180	330
E	mm	2,5 ± 0,5	2,5 ± 0,5	–	2,5 ± 0,5	–	2,5 ± 0,5	–
D	mm	22,5 ± 2,0	22,5 ± 2,0	20,5	22,5 ± 2,0	20,5	22,5 ± 2,0	20,5
W_1	mm	$8,4\ ^{+1,5}_{0}$						
C	mm	$13,0\ ^{+0,5}_{-0,25}$	$13,0\ ^{+0,5}_{-0,25}$	$12,75\ ^{+1,5}_{0}$	$13,0\ ^{+0,5}_{-0,25}$	$12,75\ ^{+0,15}_{0}$	$13,0\ ^{+0,5}_{-0,25}$	$12,75\ ^{+0,15}_{0}$
N	mm	62						
W_2	mm	max 14,4						

According to **IEC 60 286-3**

Reel

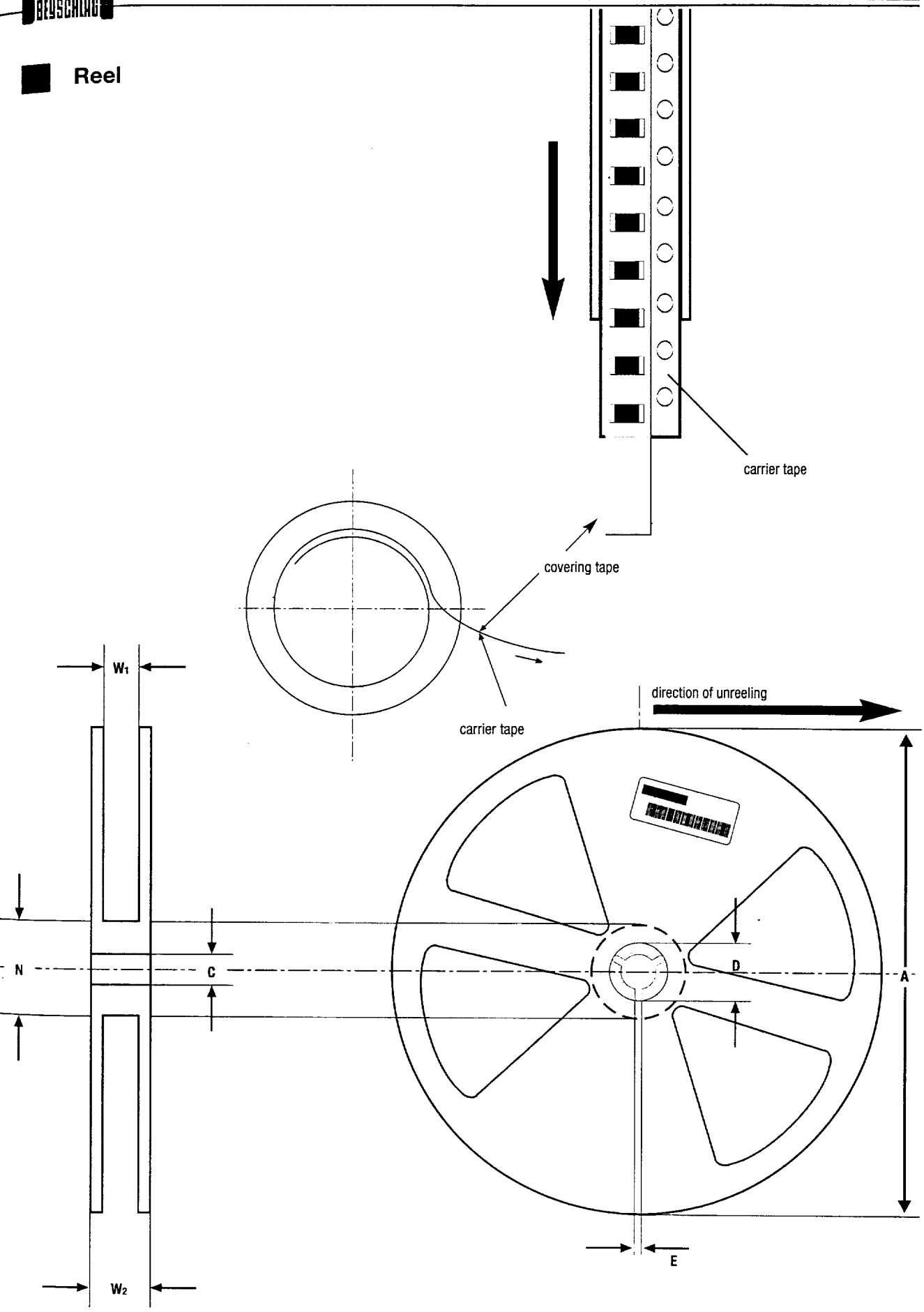
carrier tape
covering tape
carrier tape
direction of unreeling
W1
W2
N
C
D
A
E

Cardboard Tape

Style		MCS 0402	MCT 0603 OCT 0603 NCT 0603 TCT 0603	MCU 0805 OCU 0805 NCU 0805 TCU 0805	DCS 0402	DCT 0603	DCU 0805	DCA 1206
A_0	mm	0,7	1,1	1,6	0,7	$1,0^{+0,2}_{0}$	$1,5^{+0,2}_{0}$	$1,85^{+0,2}_{0}$
B_0	mm	1,2	1,9	2,38	1,2	$1,8^{+0,2}_{0}$	$2,25^{+0,2}_{0}$	$3,45^{+0,2}_{0}$
E	mm	1,75 ± 0,1						
F	mm	3,5 ± 0,05						
D_0	mm	$1,5^{+0,1}_{0}$						
P_0	mm	4,0 ± 0,1						
P_1	mm	2,0	4,0 ± 0,1		2,0	4,0 ± 0,1		
P_2	mm	2,0 ± 0,05						
W	mm	8,0 ± 0,3						

According to **IEC 60 286-3 type I**

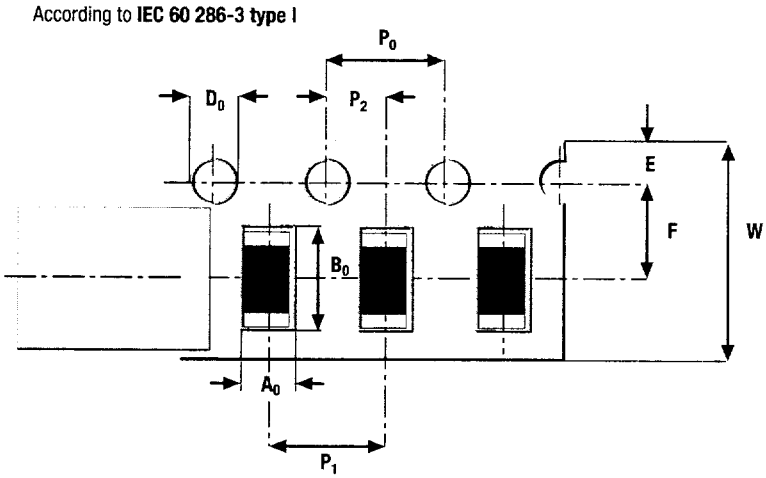

Bulk Case

		MFC Series
L_1	mm	36
H	mm	110
W	mm	12
L_2	mm	31,5
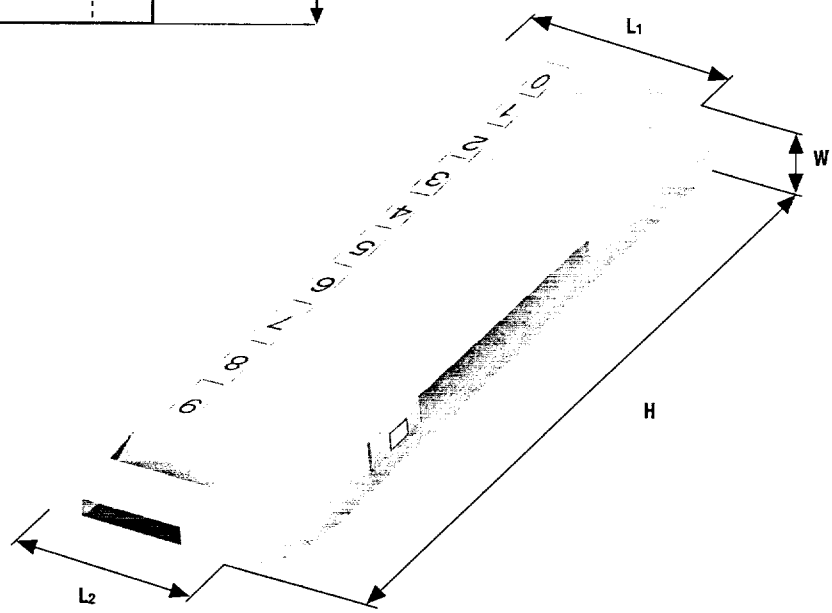
According to **IEC 60 286-6**