Paulmann

Safety Instructions

0, 1, 6, 8, 11, 12, 15, 22, 23, 25, 28

Info Hotline

+49 (0) 5041 998 389
Mon.-Do. 7 00-20 00
Fr. 7 00-17 00

Paulmann Licht GmbH
Quezinger Feld 2
31832 Springe
Germany

www.paulmann.com

Art.-Nr.: **70317/18/20/21/28/29** (+MA 173) POW 08/15

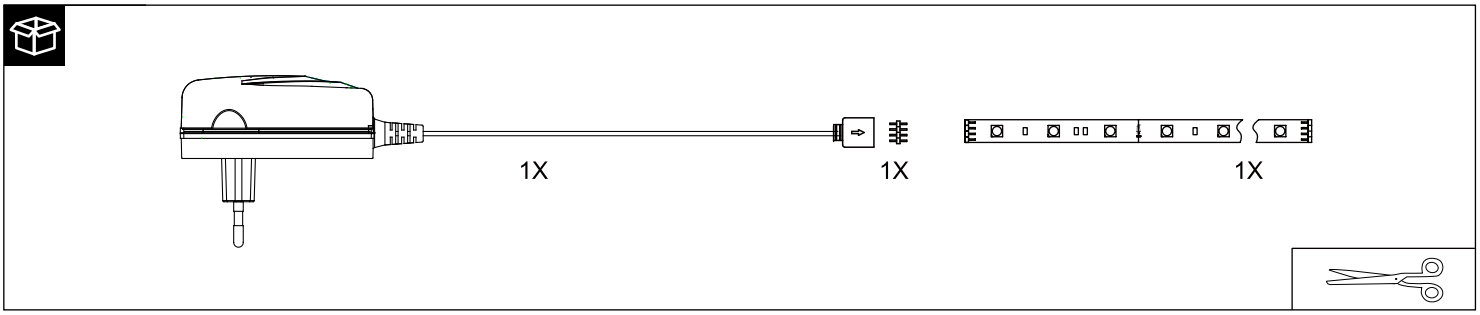

A

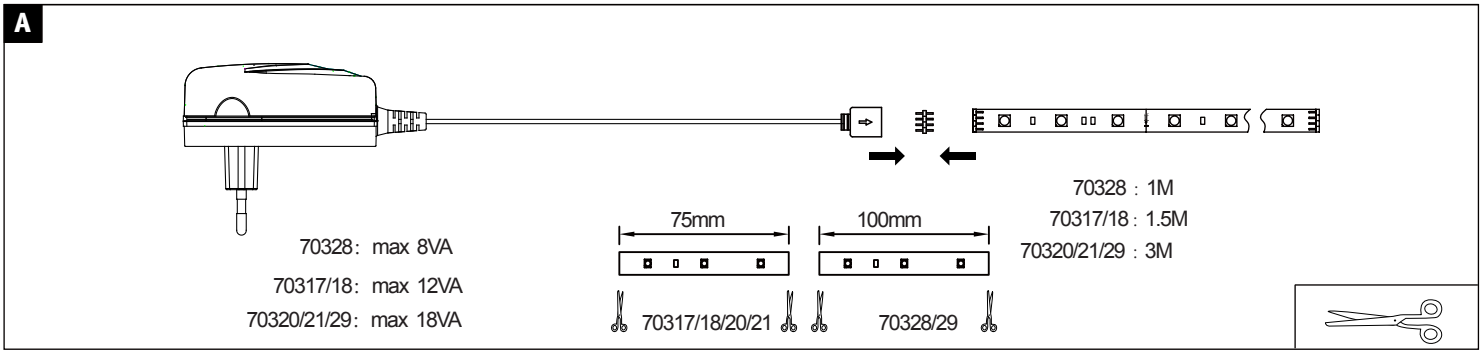

B

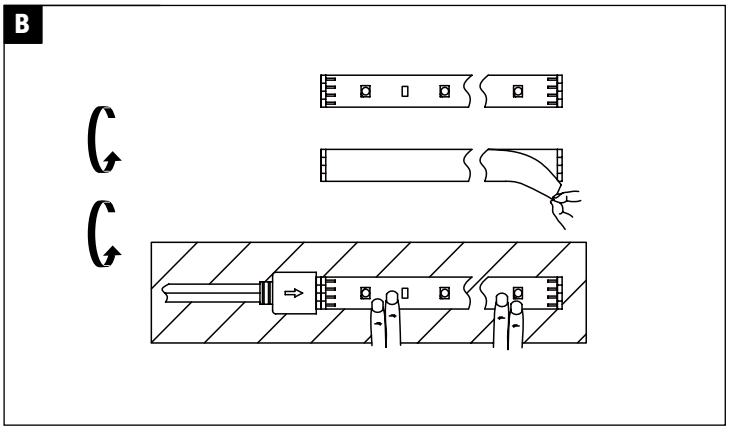

C

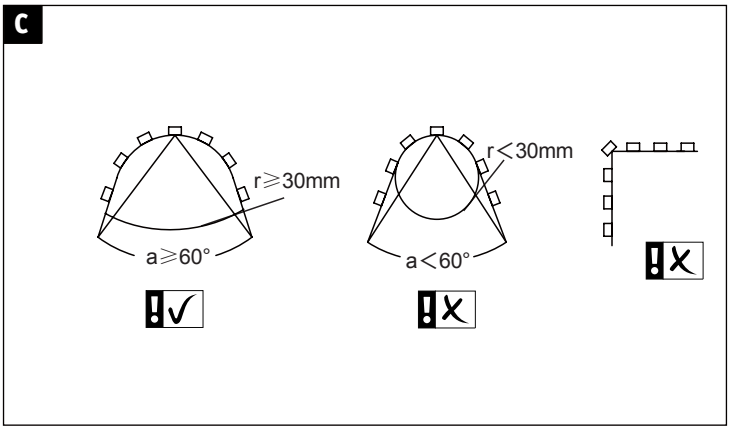
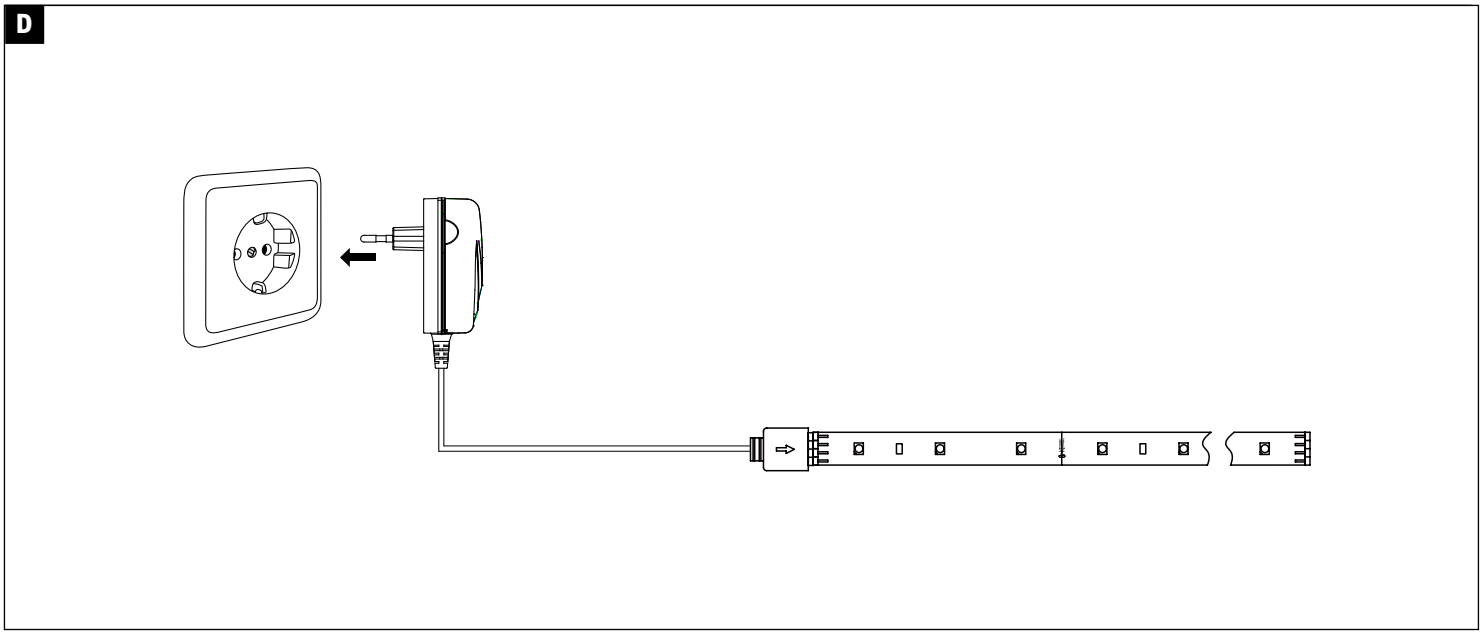
D