Multiturn Potentiometer

WEL3266 Cermet Trimming Potentiometer

Weltron ELEKTRONIK GMBH

Square/Multiturn/ Cermet/ Industrial/ Sealed
5 Terminal Styles
Rohs Compliant

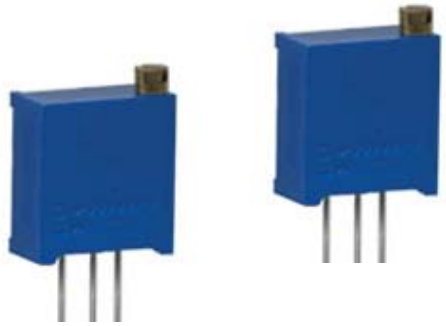

Electrical Characteristics

Standard Resistance range: 10Ω - 2MΩ
Resistance Tolerance: ±10% std.
Absolute Minimum Resistance: ≤1% or 2Ω
Contact Resistance Variation: ≤3% or 3Ω
Insulation Resistance : R1≥1,000 MegΩ
Withstand Voltage : 500VAC
Effective Travel: 12 turns normal

Environmental Characteristics

Power Rating:(315V max.)0.25W@70℃, 0W@150℃
Temperature Range: -55℃ to +150℃
Temperature Coefficient: ±100ppm/℃
Vibration: 10-500Hz, 0.25mm, 6Hour: △R≤±5%
Shock: 390m/s, 4000cycles, △R≤±3%
Electrical Endurance:0.5W@70℃,1000H,△R≤3%
Rotational Life: 200Cycles,△R≤±3%

Physical Characteristics

Starting Torque: ≤30mN·m
Flammability: UL.94V-0
Marking: Resistance code, Model
Standard Packaging: 50pcs per tube

How To Order:

WEL3266 W - 1 - 103

- Model
- Style
- Standard or Modified Product Indicator
  - -1 = Standard Product
- Resistance Code

Standard Resistance Table:

Resistance (Ohms)	Resistance Code
10	100
20	200
50	500
100	101
200	201
500	501
1000	102
2000	202
5000	502
10000	103
20000	203
25000	253
50000	503
100000	104
200000	204
250000	254
500000	504
1000000	105
2000000	205

WEL3266 Common Dimension & Adjust Method

WEL3266W

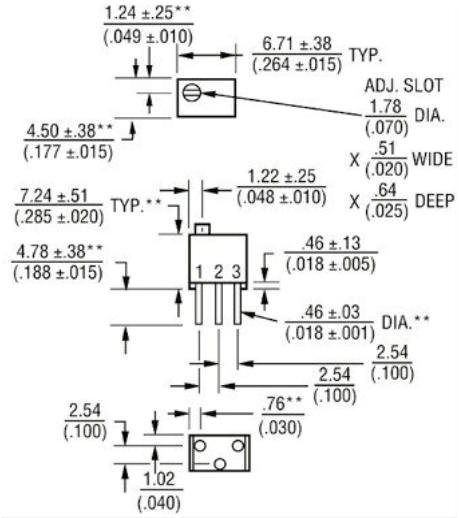

WEL3266Y

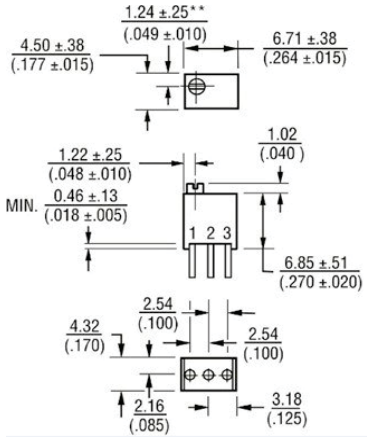

WEL3266P

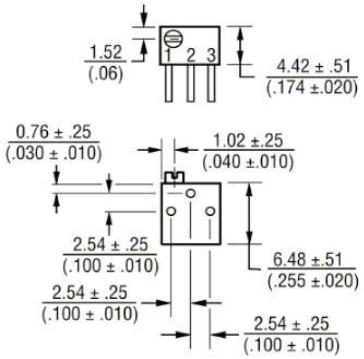

WEL3266Z

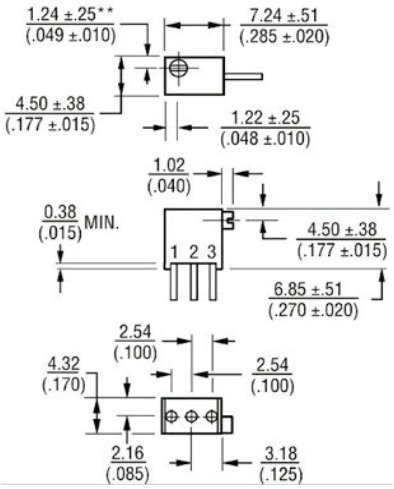
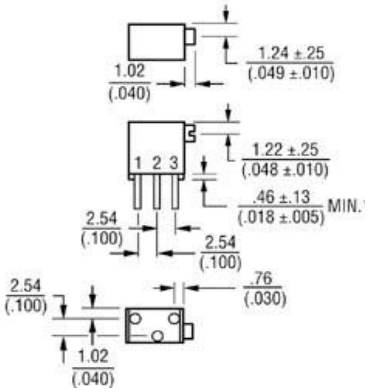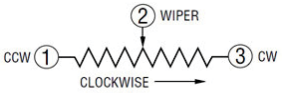
WEL3266X