Features

- 6 mm Round / Single-Turn / Cermet Industrial / Open Frame
- Cross slot adjustment options
- Horizontal and vertical mounting styles
- Dust resistant/splash resistant covers
- PC board stand-offs and retention feature
- Front and top adjust styles
- RoHS compliant*

3306 - 6 mm Round Trimming Potentiometer

Electrical Characteristics

Standard Resistance Range
.....100 ohms to 1 megohm
(see standard resistance table)
Resistance Tolerance ..... ±25 % std.
(tighter tolerance available)
Absolute Minimum Resistance
..... 2 % max. (≤2K = 30 ohms)
Contact Resistance Variation . 3 % max.
Resolution ..... Essentially infinite
Adjustment Angle ..... 215 ° nom.

Environmental Characteristics

Power Rating (100 volts max.)
70 °C .....0.2 watt
Temperature Range ... -25 °C to +100 °C
Temperature Coefficient ... ±250 ppm/°C
Load Life ..1,000 hours 0.2 watt @ 70 °C
(5 % ΔTR)

Physical Characteristics

Mechanical Angle .....260 ° ±20 °
Torque (Operating).....4.5 oz-in. max.
Stop Strength .....6.5 oz -in. min.
Terminals .....Solderable pins
Marking.....Manufacturer's trademark, resistance code
Standard Packaging....200 pcs. per bag
Adjustment Tool.....H-90

Aqueous cleaning not recommended

How To Order

3306 W - 1 - 103

Model
Style
Standard Product
Resistance Code

Standard Resistance Table

Resistance (Ohms)	Resistance Code
100	**101**
200	**201**
500	**501**
1,000	**102**
2,000	**202**
5,000	**502**
10,000	**103**
20,000	**203**
25,000	**253**
50,000	**503**
100,000	**104**
200,000	204
250,000	254
500,000	504
1,000,000	105

Popular distribution resistance values listed in boldface.

Product Dimensions

Top Adjust Common Dimensions

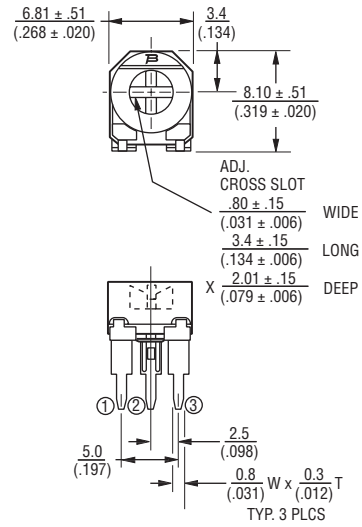

Side Adjust Common Dimensions

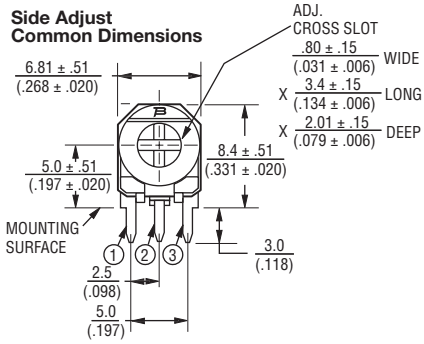

3306W

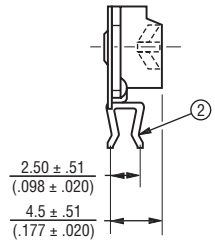

3306P

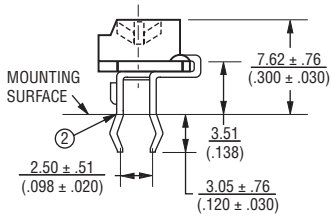

3306K

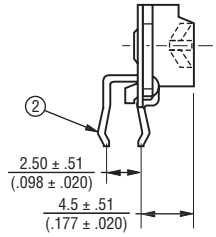

3306F

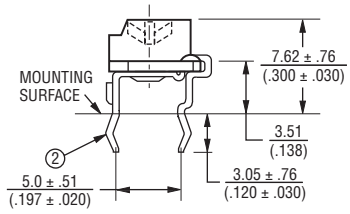

SUGGESTED PWB LAYOUT - STYLE F

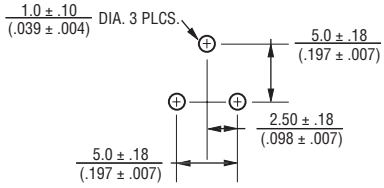

SUGGESTED PWB LAYOUT - STYLES K, P, W

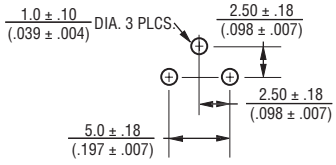

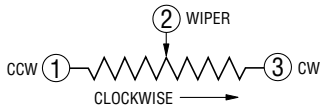

DIMENSIONS: MM (INCHES)

TOLERANCES: ± 0.25 (.010) EXCEPT WHERE NOTED

REV. 02/09

*RoHS Directive 2002/95/EC Jan 27 2003 including Annex.
Specifications are subject to change without notice.
Customers should verify actual device performance in their specific applications