Solid-state relay module - PLC-OPT- 24DC/ 48DC/100 - 2900352

Please be informed that the data shown in this PDF Document is generated from our Online Catalog. Please find the complete data in the user's documentation. Our General Terms of Use for Downloads are valid (http://download.phoenixcontact.com)



PLC-INTERFACE, consisting of PLC-BPT basic terminal block with Push-in connection and plug-in miniature solid-state relay, for mounting on NS 35/7,5 DIN rail, input: 24 V DC, output: 3 - 48 V DC/100 mA

Product Features

- Narrow design
- Efficient connection to system cabling using V8 adapter
- RT III sealed solid-state relay
- Functional plug-in bridges
- High switching power
- Integrated input circuit
- Zero voltage switch at AC output



Key commercial data

package_quantity	10
GTIN	4046356508636

Technical data

Note:

Utilization restriction	EMC: class A product, see manufacturer's declaration in the download area

Dimensions

Width	6.2 mm
Height	80 mm
Depth	94 mm

Ambient conditions

Ambient temperature (operation)	-25 °C ... 60 °C
Ambient temperature (storage/transport)	-25 °C ... 70 °C

Input data

Nominal input voltage U_N	24 V DC
Input voltage range in reference to U_N	0.8 ... 1.2
Switching threshold "0" signal in reference to U_N	≤ 0.4

Solid-state relay module - PLC-OPT- 24DC/ 48DC/100 - 2900352

Technical data

Input data

Switching threshold "1" signal in reference to U_N	≥ 0.8
Typical input current at U_N	8.5 mA
Typical response time	20 µs (at U_N)
Typical turn-off time	300 µs (at U_N)
Operating voltage display	Yellow LED
Type of protection	Protection against polarity reversal
Type of protection	Free-wheeling diode
Protective circuit/component	Polarity protection diode
Protective circuit/component	Damping diode
Transmission frequency	300 Hz

Output data

Output voltage range	3 V DC ... 48 V DC
Limiting continuous current	100 mA
Voltage drop at max. limiting continuous current	≤ 1 V
Output circuit	2-wire, floating
Type of protection	Protection against polarity reversal
Type of protection	Surge protection
Protective circuit/component	Polarity protection diode

Connection data

Connection method	Push-in connection
Stripping length	8 mm
Conductor cross section solid min.	0.14 mm²
Conductor cross section solid max.	2.5 mm²
Conductor cross section stranded min.	0.14 mm²
Conductor cross section stranded max.	2.5 mm²
Conductor cross section AWG/kcmil min.	26
Conductor cross section AWG/kcmil max	14

General

Test voltage input/output	2.5 kV (50 Hz, 1 min.)
Mounting position	Any
Assembly instructions	In rows with zero spacing
Operating mode	100% operating factor
Inflammability class according to UL 94	V0
Pollution degree	2
Surge voltage category	III

classifications

eCl@ss

eCl@ss 4.0	27371001

Solid-state relay module - PLC-OPT- 24DC/ 48DC/100 - 2900352

classifications

eCl@ss

eCl@ss 4.1	27371001
eCl@ss 5.0	27371001
eCl@ss 5.1	27371001
eCl@ss 6.0	27371001
eCl@ss 7.0	27371001
eCl@ss 8.0	27371001

ETIM

ETIM 3.0	EC001504
ETIM 4.0	EC001504
ETIM 5.0	EC001504

UNSPSC

UNSPSC 6.01	30211916
UNSPSC 7.0901	39121542
UNSPSC 11	39121542
UNSPSC 12.01	39121542
UNSPSC 13.2	39121542

approvals

UL Recognized / UL Listed / cUL Recognized / cUL Listed / GL / UL Listed / cUL Listed / cULus Recognized / cULus Listed /

Approval details

UL Recognized

UL Listed

cUL Recognized

cUL Listed

GL

Solid-state relay module - PLC-OPT- 24DC/ 48DC/100 - 2900352

approvals

UL Listed

cUL Listed

cULus Recognized

cULus Listed

accessories

Mounting rail

NS 35/ 7,5 V2A UNPERF 2000MM - 0801377



NS 35/ 7,5 PERF 2000MM - 0801733



NS 35/ 7,5 CU UNPERF 2000MM - 0801762



Solid-state relay module - PLC-OPT- 24DC/ 48DC/100 - 2900352

accessories

NS 35/15 UNPERF 2000MM - 1201714



NS 35/15 CU UNPERF 2000MM - 1201895



NS 35/15-2,3 UNPERF 2000MM - 1201798



NS 35/15 AL UNPERF 2000MM - 1201756



NS 35/15 PERF 2000MM - 1201730



NS 35/ 7,5 UNPERF 2000MM - 0801681



Solid-state relay module - PLC-OPT- 24DC/ 48DC/100 - 2900352

accessories

Power module

PLC-ESK GY - 2966508



Partition plate

PLC-ATP BK - 2966841



Screwdriver tools

SZF 1-0,6X3,5 - 1204517



Labeled terminal marker

ZB 6,LGS:FORTL.ZAHLEN - 1051016



Terminal marking

Solid-state relay module - PLC-OPT- 24DC/ 48DC/100 - 2900352

accessories

ZB 6:UNBEDRUCKT - 1051003



Controller board

PLC-V8/FLK14/OUT - 2295554



PLC-V8/FLK14/OUT/M - 2304102



PLC-V8/D15B/OUT - 2296061



PLC-V8/FLK14/IN - 2296553



Solid-state relay module - PLC-OPT- 24DC/ 48DC/100 - 2900352

accessories

PLC-V8/FLK14/IN/M - 2304115



PLC-V8/D15B/IN - 2296087



Interface module

PLC-V8/D15S/OUT - 2296058



PLC-V8/D15S/IN - 2296074



Relay socket

PLC-BPT- 24DC/21 - 2900445



Single solid-state relay

Solid-state relay module - PLC-OPT- 24DC/ 48DC/100 - 2900352

accessories

OPT-24DC/ 48DC/100 - 2966618



Bridge

FBST 500-PLC RD - 2966786



FBST 500-PLC BU - 2966692



FBST 500-PLC GY - 2966838



FBST 6-PLC RD - 2966236



Solid-state relay module - PLC-OPT- 24DC/ 48DC/100 - 2900352

accessories

FBST 6-PLC BU - 2966812



FBST 6-PLC GY - 2966825



FBST 8-PLC GY - 2967688



Drawings

Solid-state relay module - PLC-OPT- 24DC/ 48DC/100 - 2900352

Circuit diagram

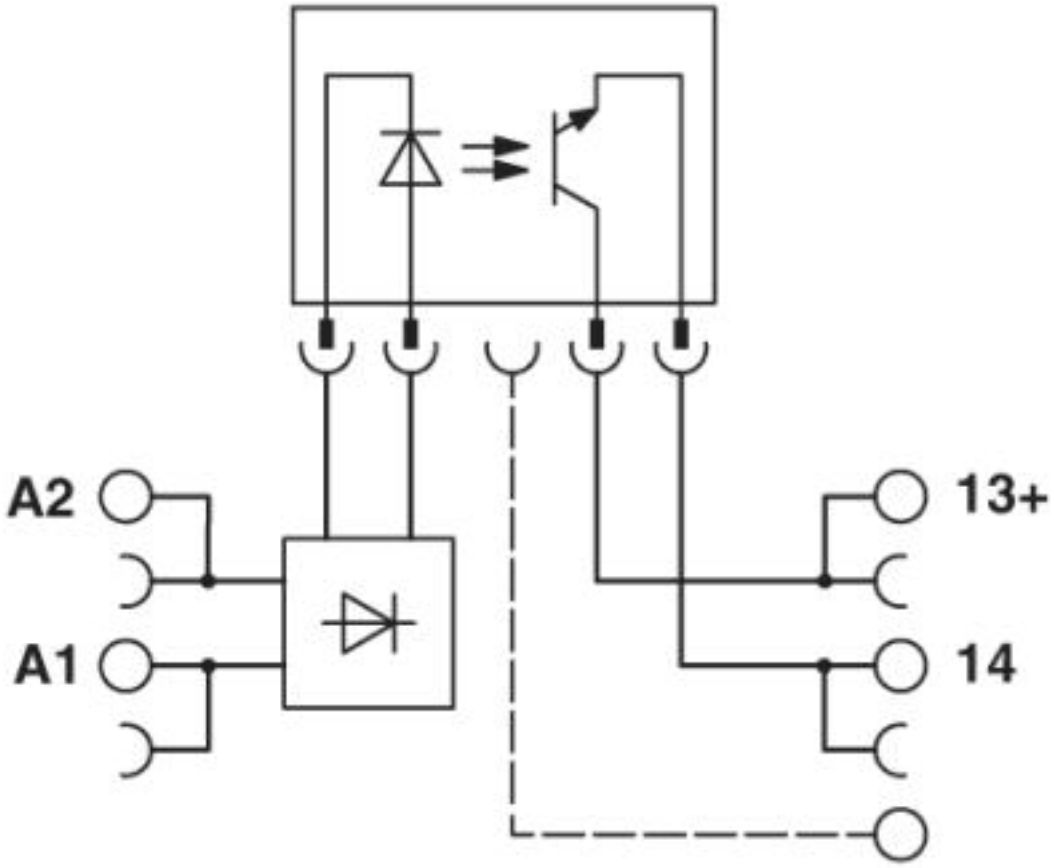

© Phoenix Contact 2013 - all rights reserved
http://www.phoenixcontact.com