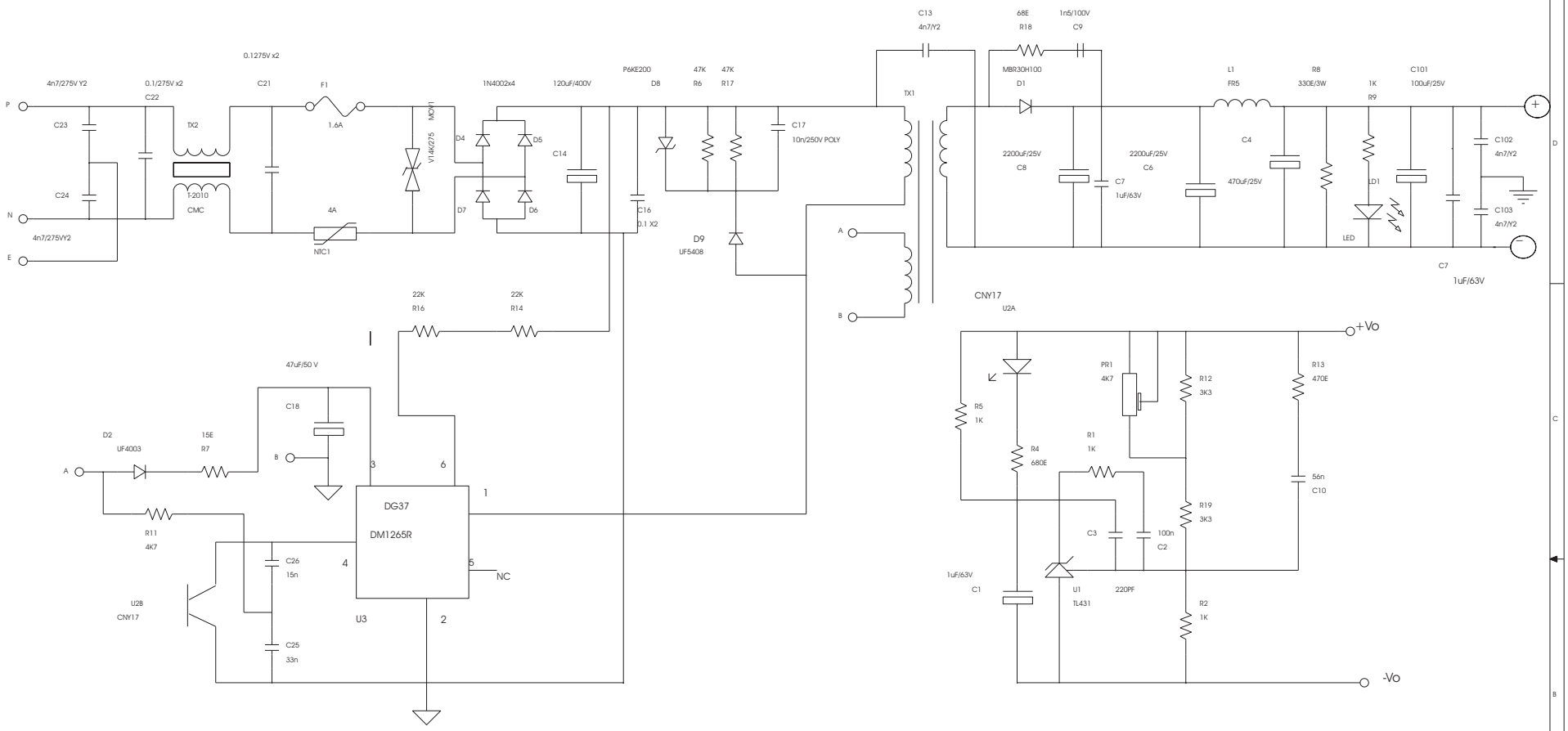

APPD. BY
S. R. SHINDE
A.G.M. (D & D)

NO	DESCRIPTION	APP	CHK	DATE

AMEND

DATE :- 27/10/06

SCHEMATIC CIRCUIT DIAGRAM OF

FSP 1207fsc FIXED POWER SUPPLY

DRG NO.	DRN. BY	CHD. BY	APPD. BY	REV.
SIL/16/0421	PRASANNA	GAURAV	S.R. Shinde	00