A 120

*= Dimension reduced at bottom due to conical form.
Tolerances to GTA 13/5 DIN 1688

Order designation

Enclosures	Order no.
A 120	01120000
A 120 SIL	01120010

(SIL = lid with silicone seal)

Accessories (additional charge)	Order no.
M: Mounting plate, sheet steel, galv.	21001600
KP: Capstan-headed screws, sealable	21007995
IS: Allen head screws	21007990
E: Earthing bar, mounted with clamps	21004600
WL: Set of wall brackets = 4 pcs	21004300
TS 15: Top hat rail DIN EN 60715 TH15	21003205
TS 32: G-rail DIN EN 60715 G 32	21003200
TS 35: Top hat rail DIN EN 60715 TH35	21003210

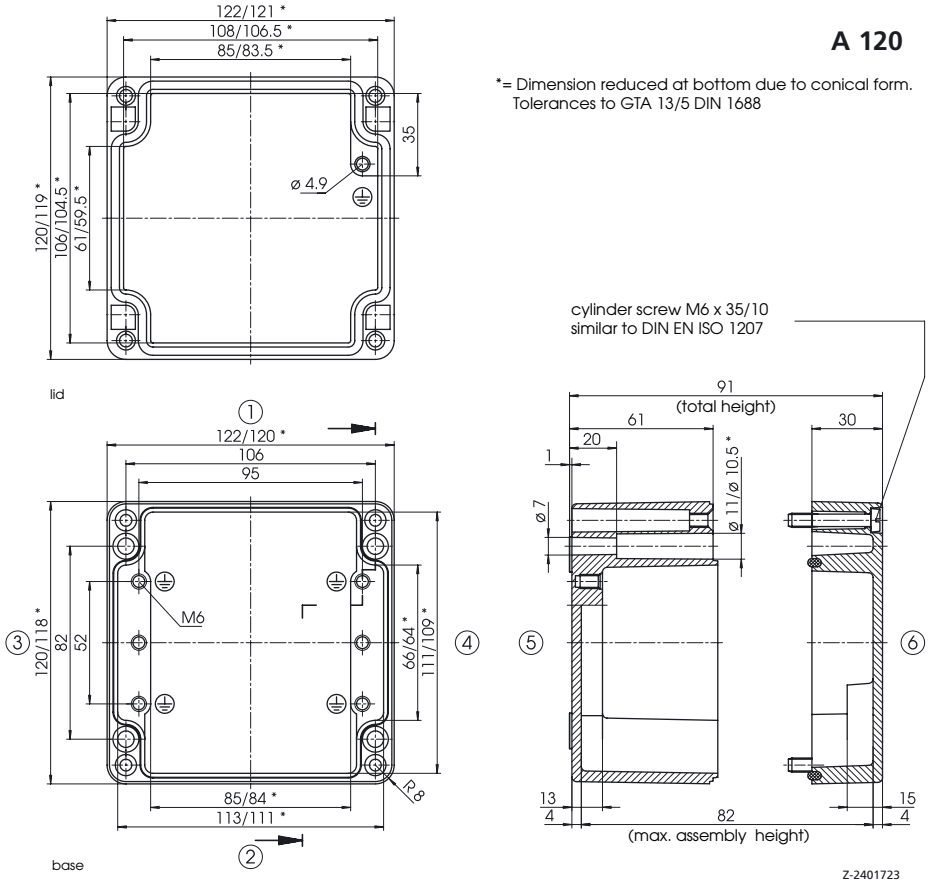

A 121

*= Dimension reduced at bottom due to conical form.
Tolerances to GTA 13/5 DIN 1688

Order designation

Enclosures	Order no.
A 121	01121000
A 121 SIL	01121010

(SIL = lid with silicone seal)

Accessories (additional charge)	Order no.
M: Mounting plate, sheet steel, galv.	21001610
KP: Capstan-headed screws, sealable	21007995
IS: Allen head screws	21007990
E: Earthing bar, mounted with clamps	21004650
WL: Set of wall brackets = 4 pcs	21004300
TS 32: G-rail DIN EN 60715 G 32	21003250
TS 35: Top hat rail DIN EN 60715 TH35	21003260

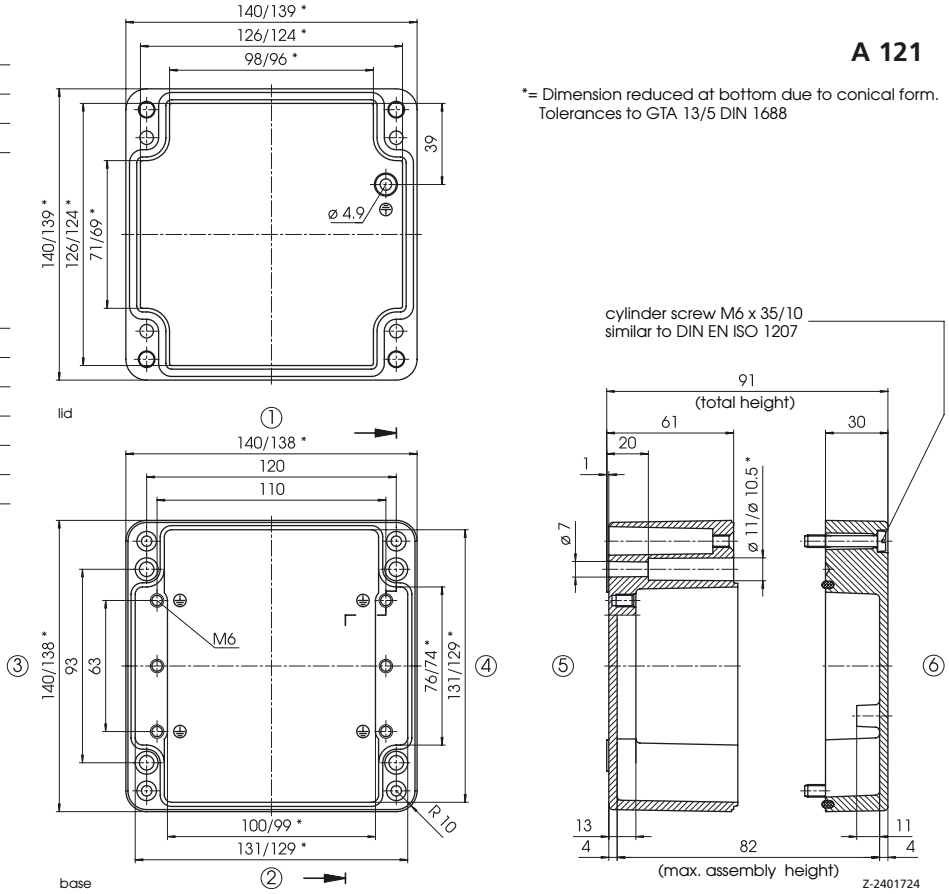

Processing (drilling, milling, printing) and terminal assignment on request.
All dimensions in mm. Please refer to technical data.