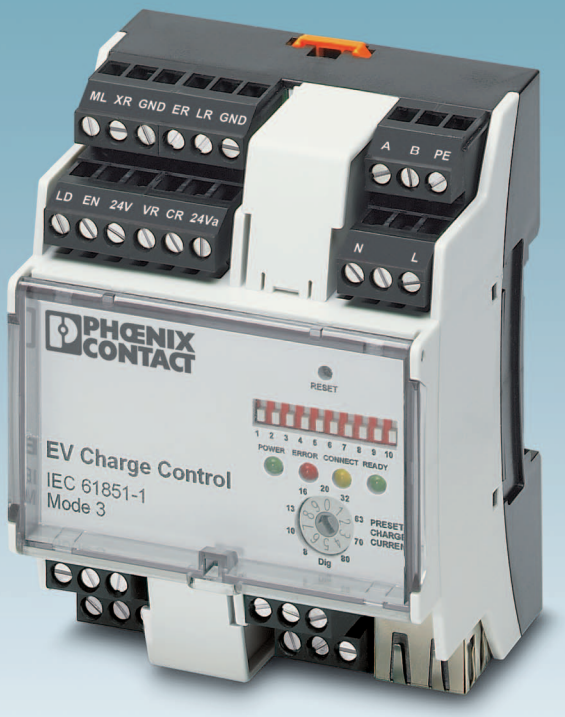


# EV Charge Control
# Standard-compliant control of the Control Pilot and Proximity Plug interfaces between the electric vehicle and charging station

User manual

PHOENIX CONTACT
INSPIRING INNOVATIONS

# User manual

# EV Charge Control

## Standard-compliant control of the Control Pilot and Proximity Plug interfaces between the electric vehicle and charging station

2015-09-23

Designation: UM EN EV CHARGE CONTROL

Revision: 04

This user manual is valid for:

| Designation | Revision | Order No. |
|---|---|---|
| EM-CP-PP-ETH | 7 | 2902802 |

# Please observe the following notes

### User group of this manual

The use of products described in this manual is oriented exclusively to:

- Qualified electricians or persons instructed by them, who are familiar with applicable standards and other regulations regarding electrical engineering and, in particular, the relevant safety concepts.
- Qualified application programmers and software engineers, who are familiar with the safety concepts of automation technology and applicable standards.

### Explanation of symbols used and signal words



This is the safety alert symbol. It is used to alert you to potential personal injury hazards. Obey all safety measures that follow this symbol to avoid possible injury or death.

There are three different categories of personal injury that are indicated with a signal word.

**DANGER** This indicates a hazardous situation which, if not avoided, will result in death or serious injury.

**WARNING** This indicates a hazardous situation which, if not avoided, could result in death or serious injury.

**CAUTION** This indicates a hazardous situation which, if not avoided, could result in minor or moderate injury.



This symbol together with the signal word **NOTE** and the accompanying text alert the reader to a situation which may cause damage or malfunction to the device, hardware/software, or surrounding property.



This symbol and the accompanying text provide the reader with additional information or refer to detailed sources of information.

### How to contact us

**Internet**

Up-to-date information on Phoenix Contact products and our Terms and Conditions can be found on the Internet at:
phoenixcontact.com

Make sure you always use the latest documentation.
It can be downloaded at:
phoenixcontact.net/products

**Subsidiaries**

If there are any problems that cannot be solved using the documentation, please contact your Phoenix Contact subsidiary.
Subsidiary contact information is available at phoenixcontact.com.

**Published by**

PHOENIX CONTACT GmbH & Co. KG
Flachsmarktstraße 8
32825 Blomberg
GERMANY

Should you have any suggestions or recommendations for improvement of the contents and layout of our manuals, please send your comments to:
tecdoc@phoenixcontact.com

**General terms and conditions of use for technical documentation**

Phoenix Contact reserves the right to alter, correct, and/or improve the technical documentation and the products described in the technical documentation at its own discretion and without giving prior notice, insofar as this is reasonable for the user. The same applies to any technical changes that serve the purpose of technical progress.

The receipt of technical documentation (in particular user documentation) does not constitute any further duty on the part of Phoenix Contact to furnish information on modifications to products and/or technical documentation. You are responsible to verify the suitability and intended use of the products in your specific application, in particular with regard to observing the applicable standards and regulations. All information made available in the technical data is supplied without any accompanying guarantee, whether expressly mentioned, implied or tacitly assumed.

In general, the provisions of the current standard Terms and Conditions of Phoenix Contact apply exclusively, in particular as concerns any warranty liability.

This manual, including all illustrations contained herein, is copyright protected. Any changes to the contents or the publication of extracts of this document is prohibited.

Phoenix Contact reserves the right to register its own intellectual property rights for the product identifications of Phoenix Contact products that are used here. Registration of such intellectual property rights by third parties is prohibited.

Other product identifications may be afforded legal protection, even where they may not be indicated as such.

# Table of contents


1 Properties of the charging controller ..... 7

1.1 Ordering data ..... 8

1.2 Technical data ..... 8

2 Indicators, operating elements, and connections ..... 11

2.1 Connections ..... 12

2.2 Diagnostics and status indicators ..... 13

2.3 DIP switches 1 - 10 ..... 14

2.4 Interfaces/switches ..... 15

2.5 Block diagram ..... 16

3 Startup ..... 17

3.1 Safety notes ..... 17

3.2 Dimensions ..... 18

3.3 Mounting on a DIN rail ..... 18

3.4 Connecting the supply voltage ..... 18

3.5 Configuration ..... 19

4 Signal contacts and charging sequence ..... 21

4.1 Proximity Plug (PX signal) ..... 21

4.2 Control Pilot (CP signal) ..... 22

4.3 Charging cable connection (case B and C) ..... 23

4.4 Vehicle status (status A - F) ..... 24

4.5 Typical charging sequence ..... 25

4.6 Simplified mode ..... 27

4.7 Wake-up sequence ..... 28

5 Wiring of the inputs and outputs ..... 29

5.1 Outputs ..... 29

5.2 Inputs ..... 31

5.3 Connecting the energy meter to the RS-485 communication interface ..... 33

6 Connection examples ..... 35

6.1 Charging enabled via input EN ..... 36

6.2 Charging enabled via Ethernet ..... 37

6.3 Request of current carrying capacity ..... 38

6.4 Automatic locking via lifting solenoid ..... 39

6.5 Automatic locking via DC motor with locking confirmation ..... 40

6.6 Automatic locking via DC motor with locking confirmation and charging enabled by external controller ..... 41

6.7 Manual locking via DC motor with locking confirmation and charging enabled via input EN ..... 42

6.8 Automatic locking via lifting solenoid with locking confirmation ..... 43
6.9 Automatic locking via DC motor with locking confirmation and charging enabled via input EN ..... 44
6.10 Monitoring the load contactor via auxiliary contacts ..... 45

7 Sequence diagrams for charging process ..... 47
7.1 Charging sequence 1 ..... 48
7.2 Charging sequence 2 ..... 50
7.3 Charging sequence 3 ..... 52
7.4 Charging sequence 4 ..... 55
7.5 Charging sequence 5 ..... 59
7.6 Charging sequence 6 ..... 62
7.7 Charging sequence 7 ..... 65
7.8 Charging sequence 8 ..... 69
7.9 Charging sequence 9 ..... 72
7.10 Charging sequence 10 ..... 76
7.11 Charging sequence 11 ..... 79

8 Configuration via web interface ..... 83
8.1 Connecting to the device ..... 83
8.2 Status tab ..... 84
8.3 Configuration tab ..... 88
8.4 Network tab ..... 91
8.5 Energy tab ..... 93
8.5.1 Energy, EM Configuration tab ..... 95
8.5.2 Configuration file ..... 98

9 Modbus description ..... 99
9.1 Register types ..... 99
9.2 Register assignment ..... 100

# 1 Properties of the charging controller

The EV Charge Control charging controller is used to control and monitor the charging of electric vehicles on the 3-phase AC power grid in mode 3 according to IEC 61851-1. It is integrated into a defined charging infrastructure which is permanently connected to the power grid.

The charging controller is designed to control the switching element which is used to establish the connection between the power grid and the electric vehicle. It has a communication interface via which status data and control signals can be read and written.

The charging controller monitors the Control Pilot and Proximity Plug signals.

The **Control Pilot (CP)** has the following functions, for example:

– Detection of the protective conductor connection
– Transmission and specification of the vehicle status (vehicle connected, vehicle ready for charging in various stages, error)
– Transfer of information regarding the maximum available charging current to the vehicle via a PWM signal

The charging controller detects the inserted plug and the current carrying capacity of the plug and cable via the **Proximity Plug signal (PX)**. This is achieved by means of the resistor coding in the plug.

The charging plug lock in the charging station can be activated or deactivated according to the status via the charging controller.

As an option, the charging process can also be influenced and monitored via the existing communication interface.

**Features**

– Control Pilot evaluation and control
– Monitoring of the connection to protective earth ground (PE)
– Evaluation of the Proximity Plug signal
– Control of the charging contactor and locking actuators
– Easy configuration directly at the device or via the integrated web interface
– Adjustable charging current limitation of 6 A ... 80 A
– Parameterizable automatic rejection of charging cables with low current carrying capacity
– Automatic or manual locking as well as selection of DC motor or magnetic locking actuators
– Optional locking confirmation and external release as a switching requirement
– Integration into your charging infrastructure via Ethernet interface (Modbus TCP)
– Charging process enabling, status requests, and dynamic load management via remote access
– Four digital inputs
– Four programmable digital outputs
– Four relay outputs
– Connection of an energy meter via RS-485/Modbus RTU
– Optional monitoring of charging currents

## 1.1 Ordering data

### Charging controller

| Description | Type | Order No. | Pcs. / Pkt. |
|---|---|---|---|
| **Charging controller**, for charging electric vehicles on the 3-phase AC power grid in mode 3 according to IEC 61851-1. All the necessary control functions are integrated. Additional functions are available for various charging applications. | EM-CP-PP-ETH | 2902802 | 1 |

### Accessories

| Description | Type | Order No. | Pcs. / Pkt. |
|---|---|---|---|
| **Lock Release module**, for releasing the locking mechanism in the event that the power supply in the charging station is interrupted | EM-EV-CLR-12V | 2903246 | 1 |
| **Infrastructure Socket Outlet** for installation in the charging station (20 A) | EV-T2M3SE12-3AC20A-0,7M2,5E10 | 1405213 | 1 |
| **Infrastructure Socket Outlet** for installation in the charging station (32 A) | EV-T2M3SE12-3AC32A-0,7M6,0E10 | 1405214 | 1 |

## 1.2 Technical data

| | |
|---|---|
| **Supply** | |
| Nominal input voltage range | 110 V AC ... 240 V AC |
| Input voltage range | 95 V AC ... 264 V AC |
| Current consumption, maximum | 70 mA |
| Frequency range | 45 Hz ... 65 Hz |
| **Ethernet interface, 100Base-TX according to IEEE 802.3u/10Base-T according to IEEE 802.3** | |
| Connection method | RJ45 socket |
| Transmission speed | 10/100 Mbps |
| Transmission length | 100 m (with shielded, twisted-pair data cable) |
| **RS-485 interface** | |
| Protocol | Modbus RTU |
| Connection method | Screw connection, 2-wire |
| Transmission speed | 9.6 kbps (preset) |
| | Can be set between 2.4 kbps and 19.2 kbps |
| **Relay output $C_{1,2}$ and $V_{1,2}$** | |
| Switching capacity, maximum | 1500 VA |
| Switching voltage, maximum | 250 V AC |
| Switching current, maximum | 6 A |
| **Relay output $R_{1,3}$ and $R_{2,4}$** | |
| Switching voltage, maximum | 30 V AC/DC |
| Switching current, maximum | 6 A |
| **Digital output** | |
| Output current, maximum | 0.6 A |
| Output voltage, maximum | 30 V |
| **Digital input** | |
| Nominal input voltage | 24 V |
| Nominal input current | 8 mA (at 24 V) |
| Input voltage range | -3 V ... 5 V (off) |
| | 15 V ... 30 V (on) |

## General data

| | |
|---|---|
| Degree of protection | IP20 |
| Ambient temperature range (operation) | -25°C ... +60°C |
| Ambient temperature range (storage/transport) | -40°C ... +85°C |
| Humidity | 30% ... 95% (non-condensing) |
| Vibration resistance according to EN 60068-2-6 (operation) | 10 Hz < f < 57 Hz, 0.35 mm amplitude<br>57 Hz < f < 150 Hz, 5.0g criterion A |
| Vibration resistance according to EN 60068-2-6 (storage/transport) | 10 Hz < f < 57 Hz, 0.35 mm amplitude<br>57 Hz < f < 150 Hz, 5.0g criterion B |
| Dimensions W / H / D | 71.6 mm / 61 mm / 90 mm |
| Weight | 230 g, approximately |

## Connection data

| | |
|---|---|
| Connection method | Screw connection |
| Nominal cross section | 2.5 $mm^2$ |
| Min./max. conductor cross section, solid | 0.2 $mm^2$ ... 4 $mm^2$ |
| Min./max. conductor cross section, stranded | 0.2 $mm^2$ ... 2.5 $mm^2$ |
| Min./max. conductor cross section, stranded with ferrule without plastic sleeve | 0.25 $mm^2$ ... 1.5 $mm^2$ |
| Min./max. conductor cross section, stranded with ferrule with plastic sleeve | 0.25 $mm^2$ ... 1.5 $mm^2$ |
| Min./max. conductor cross section, AWG/kcmil | AWG 24 ... 12 |
| Min./max. AWG according to UL/CUL | AWG 30 ... 12 |

## Conformance/approvals

| | |
|---|---|
| CE-compliant | |
| Low Voltage Directive | 2006/95/EC |
| Function and safety test | EN 61010-1 |
| Air and creepage distances | EN 50178 |
| Housing conformance with standards | DIN 43880 |
| Standards | DIN EN 61851-1<br>VDE 0122-1 |

## Conformance with EMC Directive 2004/108/EC and Low Voltage Directive 2006/95/EC

### Noise immunity test according to EN 61000-6-2[1]

| | | | |
|---|---|---|---|
| Electrostatic discharge (ESD) | EN 61000-4-2 | Criterion A[2] | ±4 kV (contact discharge)<br>±8 kV (air discharge) |
| Electromagnetic HF field | EN 61000-4-3 | Criterion A[2] | Frequency range: 80 MHz ... 1 GHz, field strength: 10 V/m<br>Frequency range: 1 GHz ... 3 GHz, field strength: 3 V/m |
| Fast transients (burst) | EN 61000-4-4 | Criterion A[2] | AC mains input (L, N, PE), 2 kV<br>(level 3 - asymmetrical: cable to ground)<br>Output, 1 kV (level 3 - asymmetrical: cable to ground) |
| Surge current load (surge) | EN 61000-4-5 | Criterion A[2] | Mains input<br>2 kV (level 3 - asymmetrical: cable to ground)<br>1 kV (level 2 - symmetrical: cable to cable) |
| Conducted interference | EN 61000-4-6 | Criterion A[2] | Frequency range: 150 kHz ... 80 MHz, voltage: 10 V |

### Noise emission test according to EN 61000-6-3

| | | | |
|---|---|---|---|
| Emitted radio interference | EN 55016-2-3 | Class B[3] | |

[1] EN 61000 corresponds to IEC 61000

[2] Criterion A: Normal operating behavior within the specified limits.

[3] Class B: Industrial and residential applications

# 2 Indicators, operating elements, and connections

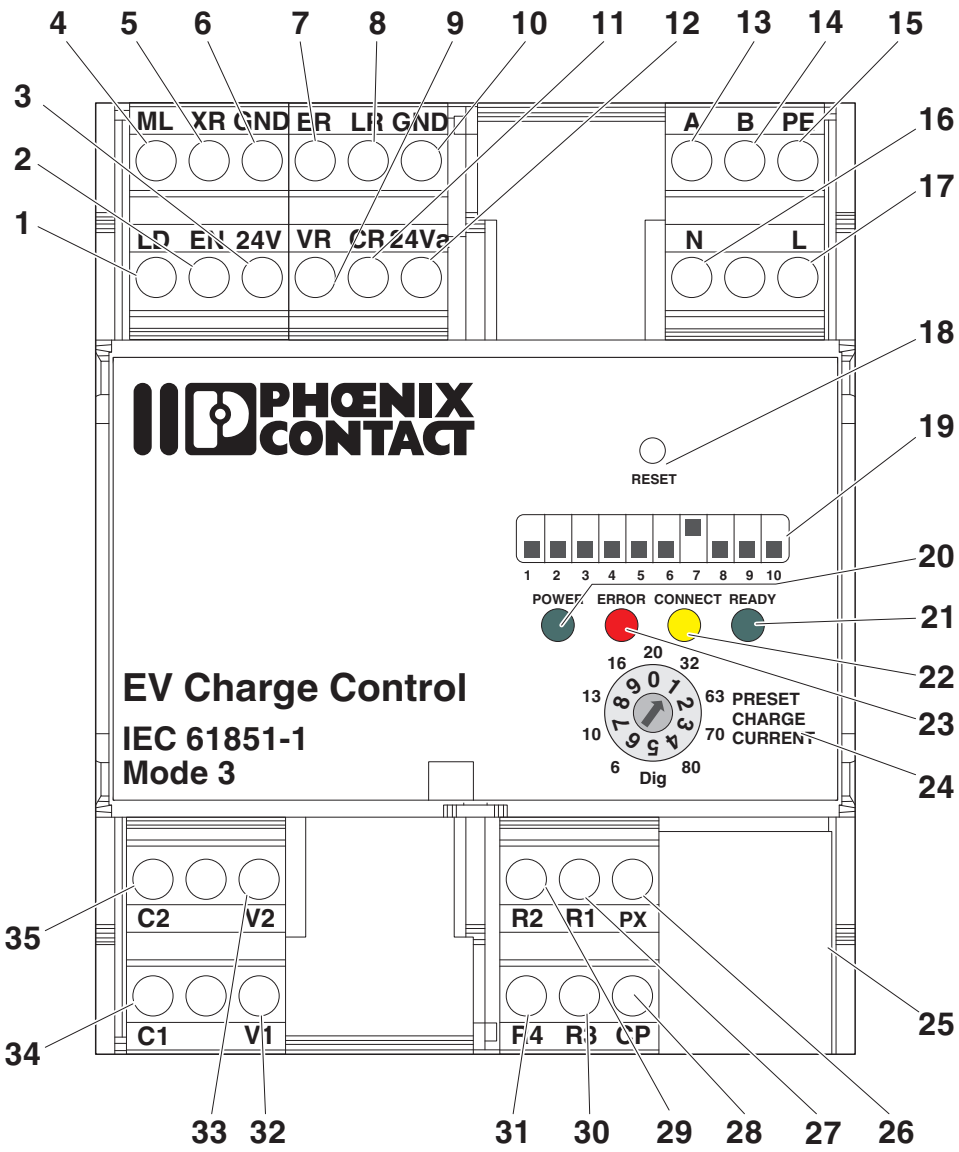


Figure 2-1 Function elements

## 2.1 Connections

| No. | Name | Meaning | Description | |
|---|---|---|---|---|
| 1 | **LD** | Lock Detection | Digital input, locking confirmation | Activation via DIP switch 6 |
| 2 | **EN** | Enable | Digital input, enable charging process | Activation via DIP switch 7 |
| 3 | **24 V** | Power | Output | 24 V DC max. 100 mA |
| 4 | **ML** | Manual Lock | Digital input, manual locking | Activation via DIP switches 4 and 9 |
| 5 | **XR** | External Release | Digital input, system status F/charging station availability | Activation via DIP switch 8 |
| 6 | **GND** | Ground | System ground, connected to protective earth ground | |
| 7 | **ER** | Error | Digital output, programmable | Default: set when errors occur<br>Error or status E or status F |
| 8 | **LR** | Locking Request | Digital output, programmable | Default: set as long as locking is to remain active |
| 9 | **VR** | Vehicle Ready | Digital output, programmable | Default: set when the vehicle is ready (status C or D) |
| 10 | **GND** | Ground | System ground | Connected to protective earth ground |
| 11 | **CR** | Charger Ready | Digital output, programmable | Default: set when PWM is switched on |
| 12 | **24 Va** | Power | Supply input of the outputs | 7.5 V DC ... 30 V DC |
| | | | | |
| 13 | **A** | RS-485 | Connection of external energy/power meters with Modbus RTU protocol | |
| 14 | **B** | RS-485 | | |
| 15 | **PE** | Protective Earth | Protective earth ground | |
| 16 | **N** | Neutral | Neutral conductor, power grid | |
| 17 | **L** | Line | Phase, power grid | 110 V AC ... 240 V AC (L-N) |
| | | | | |
| 26 | **PX** | Proximity | Test signal | Current carrying capacity of the connected plug and cable according to IEC 61851-1 |
| 27, 30, 29, 31 | **R1-R3, R2-R4** | Retaining | Relay output for locking | Configuration via DIP switches 4 and 5 |
| 28 | **CP** | Control Pilot | Interface signal | Communication between the charging station and vehicle according to IEC 61851-1 |
| | | | | |
| 32, 33 | **V1-V2** | Ventilation[1] | Relay output for ventilator | Can switch on a ventilator when status D is reached and the enabled inputs and registers are active. |
| 34, 35 | **C1-C2** | Contactor | Relay output for contactor | Switches the mains voltage to the vehicle via an external contactor when status C or D is reached and the enabled inputs and registers are active. |

[1] The ventilation is not monitored.

For additional information, please refer to “Sequence diagrams for charging process” on page 47.

## 2.2 Diagnostics and status indicators

| No. | Name | Color | Status | Description |
|---|---|---|---|---|
| 20 | **POWER** | Green | On | Supply voltage present |
| | | | Flashing (2 Hz) | System running |
| 21 | **ERROR** | Red | On | Error (status E or F) |
| 22 | **CONNECT** | Yellow | On | Plug locked |
| | | | Flashing (2 Hz) | Plug inserted |
| 23 | **READY** | Green | On | Vehicle is charging (contactor control between mains and vehicle) |
| | | | Flashing (2 Hz) | Vehicle ready (status C or D) |

## 2.3 DIP switches 1 - 10

| No. | DIP | Name | Description | |
|---|---|---|---|---|
| 19 | **1** | PX request | ON | PX request, case B,<br>charging cable with plug on the charger |
| | | | OFF | No PX request, case C,<br>permanently connected charging cable |
| | **2** | PX evaluation | ON | Reject plug/cable with low current carrying capacity |
| | | | OFF | Allow plug/cable with low current carrying capacity |
| | **3** | PX selection | Only relevant when DIP 2 = ON | |
| | | | ON | Reject 13 A plug/cable |
| | | | OFF | Reject 13 A and 20 A plug/cable |
| | **4** | Locking | ON | Execute locking |
| | | | OFF | Do not execute locking |
| | **5** | Locking option<br>(R4 at 0 V, R3 at ≤ 24 V) | Only relevant when DIP 4 = ON | |
| | | | ON | Locking option 1<br>– DC motor: the locking motor is briefly switched on<br>– Locking R1 at ≤ 24 V (R2 remains at 0 V)<br>– Unlocking R2 at ≤ 24 V (R1 remains at 0 V) |
| | | | OFF | Locking option 0<br>– Lifting solenoid<br>– R1-R3 is controlled (R1 at ≤ 24 V) for as long as locking is required<br>– R2-R4 remains in the initial status (R2 at 0 V) the entire time |
| | **6** | Locking confirmation | ON | Evaluate locking confirmation at input LD |
| | | | OFF | Do not evaluate locking confirmation at input LD |
| | **7** | Enable charging process | ON | Evaluate enable charging process input EN |
| | | | OFF | Do not evaluate enable charging process input EN |
| | **8** | Charging station availability | ON | Evaluate charging station availability input XR |
| | | | OFF | Do not evaluate charging station availability input XR |
| | **9** | Manual locking | ON | Evaluate manual locking input ML |
| | | | OFF | Do not evaluate manual locking input ML |
| | **10** | Enable via ETH (**25**) | ON | Evaluate enable bit in Modbus register |
| | | | OFF | Do not evaluate enable bit in Modbus register |

For additional information on configuration, please refer to “Sequence diagrams for charging process” on page 47.

## 2.4 Interfaces/switches

| No. | Name | Description |
|---|---|---|
| 18 | **RESET** | – Pressing the reset button once restarts the system, sets all outputs to the initial status, and restarts evaluation of the inputs.<br>– Pressing and holding down the reset button for more than 10 seconds resets all system variables that were changed via the web interface or the Modbus interface, including the communication settings for the connection via the Ethernet interface. |
| 24 | **PRESET CHARGE CURRENT** | – Rotary switch for setting a default/maximum value for the PWM signal on CP during start and when no external communication is intended.<br>– Defined values: Dig, 6 A, 10 A, 13 A, 16 A, 20 A, 32 A, 63 A, 70 A, 80 A<br>Dig = only digital communication |
| 25 | **ETH** | Communication interface (Ethernet/web interface/Modbus TCP) |

## 2.5 Block diagram

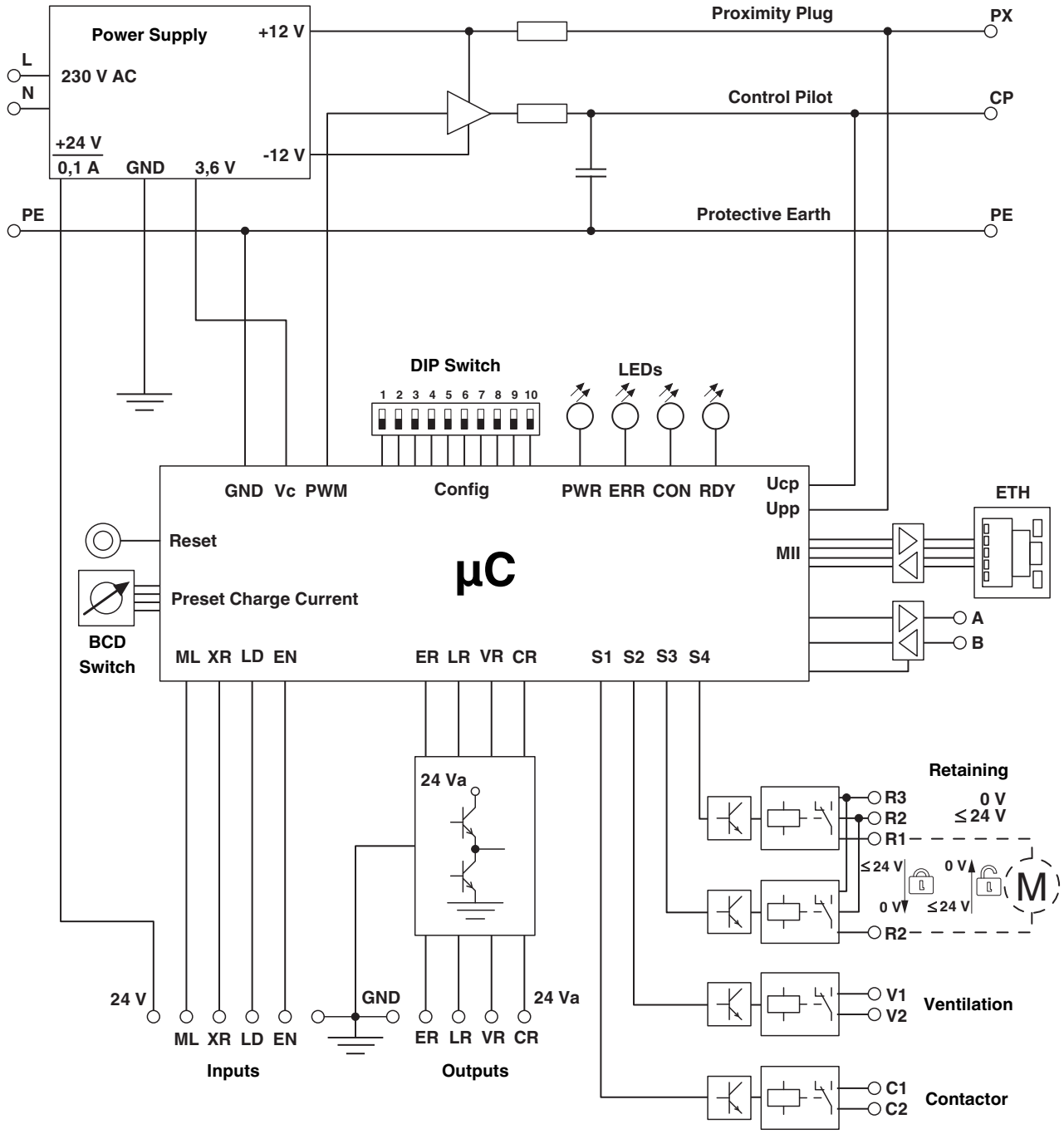


Figure 2-2 Schematic diagram

# 3 Startup

## 3.1 Safety notes

**Installation only by specialist personnel**

Installation, operation, and maintenance may only be carried out by qualified electricians. Follow the installation instructions as described. When installing and operating the charging station for electric vehicles, the applicable regulations and safety directives (including national safety directives), as well as general technical regulations, must be observed. The safety data is provided in the package slip and on the certificates (conformity assessment, additional approvals where applicable).

**Electrostatic discharge**

The device contains components that can be damaged or destroyed by electrostatic discharge. When handling the device, observe the necessary safety precautions against electrostatic discharge (ESD) according to EN 61340-5-1 and IEC 61340-5-1.

**Do not open or modify the device**

With the exception of configuration, opening or modifying the device is not permitted. Do not repair the device yourself; replace it with an equivalent device. Repairs may only be carried out by the manufacturer.

**Operation in a clean and dry environment only**

The IP20 protection (IEC 60529/EN 60529) of the device is intended for use in a clean and dry environment. Do not subject the device to mechanical and/or thermal loads that exceed the specified limits.

**Disposal**

Do not dispose of the device with household waste, it should instead be disposed of in accordance with the currently applicable national regulations. It can also be returned to Phoenix Contact.

## 3.2 Dimensions

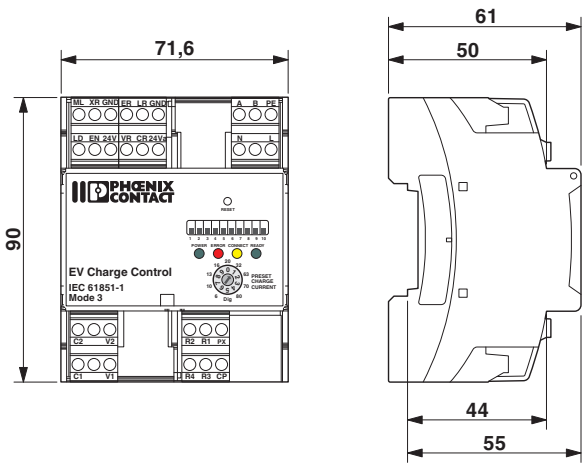


Figure 3-1 Dimensions

## 3.3 Mounting on a DIN rail

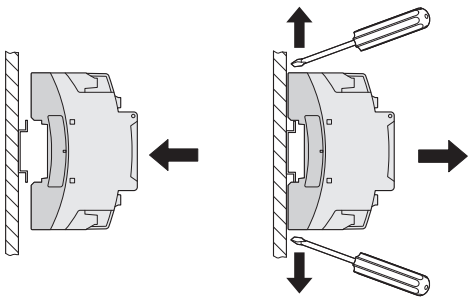

Figure 3-2 Mounting

The device can be mounted in any position.

**Mounting**

1. Place the device onto the DIN rail from above.
2. Push the device from the front toward the mounting surface until it engages with a click.

**Removal**

1. Push down the locking latch using a screwdriver, needle-nose pliers or similar.
2. Pull the bottom edge of the device away from the mounting surface.
3. Pull the device diagonally upwards from the DIN rail.

## 3.4 Connecting the supply voltage

- Supply voltage to the device via terminal blocks **16** (N), **17** (L), and **15** (PE).

## 3.5 Configuration

**PRESET CHARGE CURRENT rotary switch**

- Set the value of the default or maximum current so that the connecting cables to the charging station and the internal wiring are not overloaded.

  Please note that the set maximum current value can occur over several hours.
- If the charging current is specified via digital communication (“Dig” setting), make sure that a current higher than the maximum current permitted by the installation is not transmitted to the vehicle via serial communication.

**DIP switches DIP 1 ... 10:** for additional information on configuration, please refer to “Connection examples” on page 35 and “Sequence diagrams for charging process” on page 47.

**Web interface:** for information on configuration and status requests, please refer to “Configuration via web interface” on page 83.

# 4 Signal contacts and charging sequence

## 4.1 Proximity Plug (PX signal)

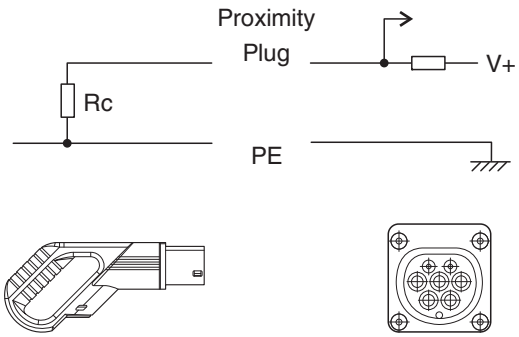


Figure 4-1 Proximity Plug wiring

The current carrying capacity is identified by means of the Rc resistor. The device measures the resistance value via the PX signal (Proximity Plug) and determines the current carrying capacity of the connected plug and cable. The coding of the permissible current for the resistance value is defined in IEC 61851-1.

Table 4-1 Coding of the permissible current for the resistance value according to IEC 61851-1

| Rc resistance value according to the standard | Measured resistance value | Resulting current carrying capacity | Register value for web interface and Modbus |
|---|---|---|---|
| – | < 75 Ω | Error | 0XFFFF |
| 100 Ω | 75 Ω ... 150 Ω | 63 (70) A | 63 |
| 220 Ω | 150 Ω ... 330 Ω | 32 A | 32 |
| 680 Ω | 330 Ω ... 1000 Ω | 20 A | 20 |
| 1500 Ω | 1000 Ω ... 2200 Ω | 13 A | 13 |
| – | > 2200 Ω | 0 A | 0 |

## 4.2 Control Pilot (CP signal)

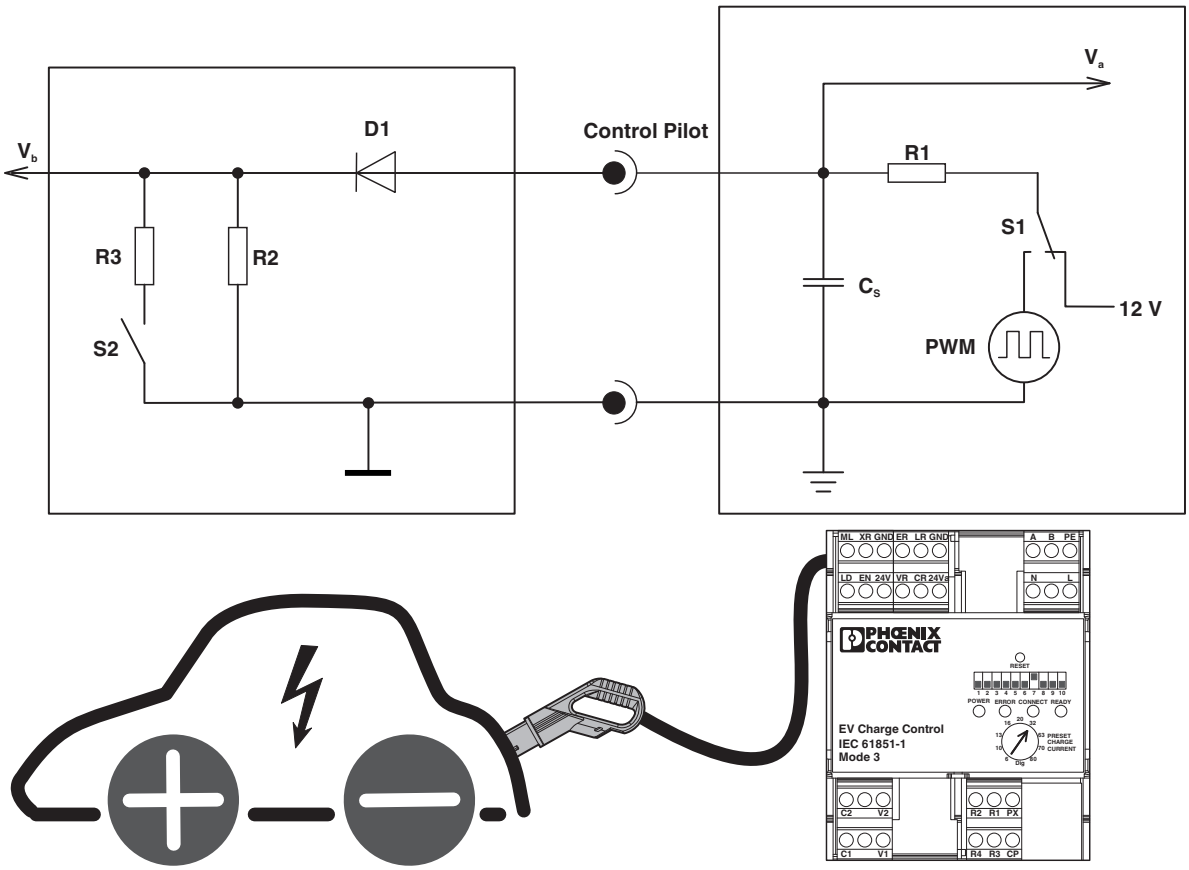


Figure 4-2 Control Pilot wiring

Via the CP signal (Control Pilot), the device specifies the permissible charging current to the vehicle which is coded as a PWM signal. The vehicle indicates the current vehicle status via the voltage value Va.

The assignment of the permissible charging current value to the pulse width of the PWM signal and the assignment of the voltage value to the vehicle states is defined in IEC 61851-1 (see table in “Typical charging sequence” on page 25).

## 4.3 Charging cable connection (case B and C)

Table 4-2 Case B and C

| Case | Description |
|---|---|
| B | Plug-in charging cable |
| C | Permanently connected charging cable |

**Case B**

The charging cable is not part of the charging station.

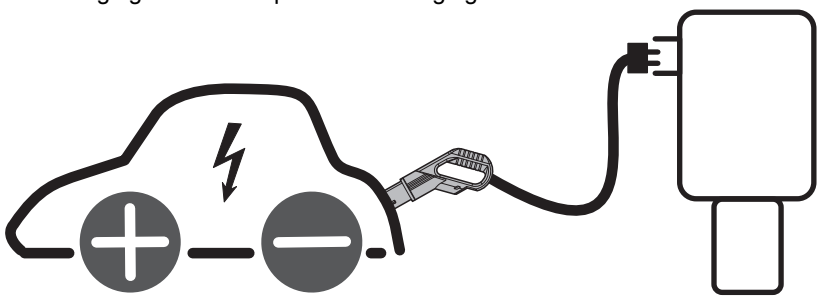

Figure 4-3 Plug-in charging cable - case B

**Case C**

The charging cable is part of the charging station.

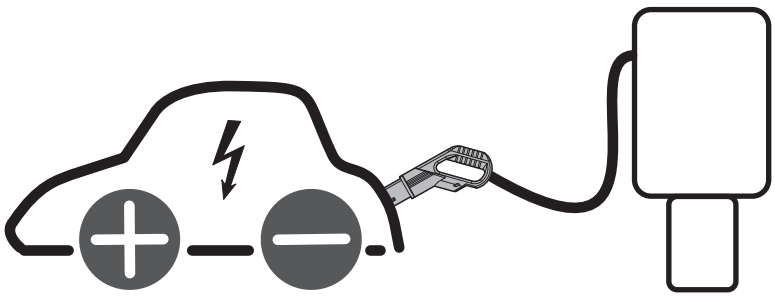

Figure 4-4 Permanently connected charging cable - case C

## 4.4 Vehicle status (status A - F)

Table 4-3 Vehicle status according to IEC 61851

| Vehicle status | Vehicle connected | S2[1] | Charging possible | Va[2] | Description |
|---|---|---|---|---|---|
| **A** | No | Open | No | 12 V | Vb[3] = 0 V |
| **B** | Yes | Open | No | 9 V | R2 detected<br>B1 (9 V DC): EVSE[4] not ready yet<br>B2 (9 V PWM): EVSE ready |
| **C** | Yes | Closed | Vehicle ready | 6 V | R3 = 1.3 kΩ ±3%<br>Ventilation not required |
| **D** | | | | 3 V | R3 = 270 Ω ±3%<br>Ventilation required |
| **E** | Yes | Open | No | 0 V | Vb = 0: EVSE, short circuit at the EV Charge Control, power supply not available |
| **F** | Yes | Open | No | EVSE not available | EVSE not available |

1 Switch S2 (see Figure 4-2 on page 22)

2 Va = measured voltage in the EV Charge Control

3 Vb = measured voltage in the vehicle

4 EVSE = Electric Vehicle Supply Equipment (charging station)

## 4.5 Typical charging sequence

Table 4-4 Charging sequence according to the vehicle status

| Vehicle status | State | Description | CP signal |
|---|---|---|---|
| **A** | No charging plug connected | | 12 V |
| **B** | Charging plug connected | Voltage at the Control Pilot signal (CP) drops to 9 V.<br>R2 in vehicle detected.<br>The voltage value at CP is the result of the series connection of resistor R1 in the charging controller, diode D in the vehicle, and resistor R2 in the vehicle at 12 V.<br>In status B, the oscillator with pulse width modulation (PWM) is switched on. The pulse width codes the permissible charging current that the vehicle may take from the charging infrastructure.<br>The coding is shown in the table below.<br>B1 (9 V DC): EVSE not ready yet<br>B2 (9 V PWM): EVSE ready | 9 V |
| **C** | Charging without ventilation | If the vehicle has detected the PWM signal, it connects another resistor R3 parallel to R2 via switch S2. The resulting voltage value is 6 V (ventilation not required) or 3 V (ventilation required).<br>The charging controller connects the mains voltage to the vehicle via a contactor and charging cable. The charging process begins. | 6 V or 3 V |
| **D** | Charging with ventilation | | |
| **B** | Charging completed | The vehicle disconnects resistor R3 again via S2.<br>The charging controller disconnects the contactor again and with it the voltage from the charging cable.<br>Conversely, the charging controller can also indicate to the vehicle that the charging process should be completed by switching off the PWM signal. | 9 V |
| **A** | Charging plug removed | | 12 V |

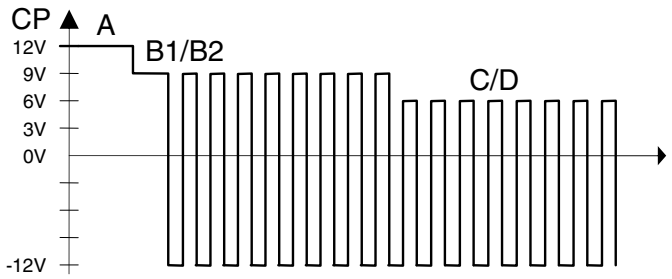


Figure 4-5 Typical signal curve

Table 4-5 Controlling the maximum charging current that may be taken

| Evaluation of nominal pulse duty factors by the vehicle | Maximum current that the vehicle may take |
|---|---|
| Pulse duty factor < 3% | Charging is not permitted |
| 3% ≤ pulse duty factor ≤ 7% | Indicates that digital communication is being used to control a DC voltage charger outside the vehicle or to transmit the available current value to a charger inside the vehicle. Digital communication can also be used with other pulse duty factors.<br>Charging is only permitted with digital communication.<br>5% pulse duty factor should be used if the pilot cable is used for digital communication. |
| 7% < pulse duty factor < 8% | Charging is not permitted |
| 8% ≤ pulse duty factor < 10% | 6 A |
| 10% ≤ pulse duty factor ≤ 85% | Available current = (% of pulse duty factor) x 0.6 A |
| 85% < pulse duty factor ≤ 96% | Available current = (% of pulse duty factor - 64) x 2.5 A |
| 96% < pulse duty factor ≤ 97% | 80 A |
| Pulse duty factor > 97% | Charging is not permitted |

## 4.6 Simplified mode

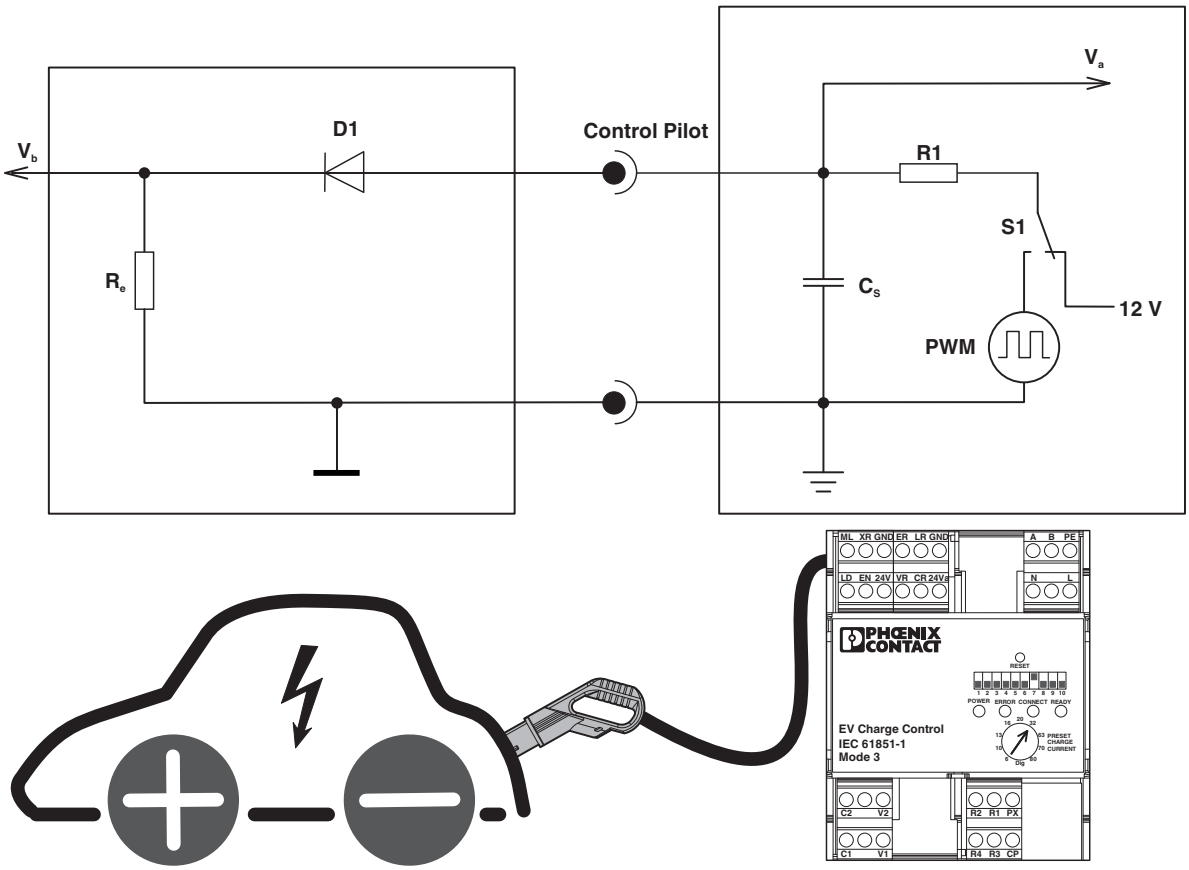


Figure 4-6 Simplified Control Pilot wiring

In simplified mode, interim status B is skipped. The permissible charging current value is limited to 10 A. Resistance value Re corresponds to the parallel connection of resistors R2 and R3 from Figure 4-2. Status C or D can also be reached in simplified mode.

## 4.7 Wake-up sequence

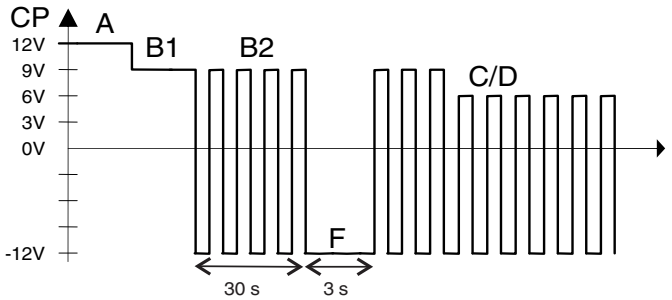


Figure 4-7 CP signal curve for wake-up sequence

If the connected vehicle switches from status B1 (9 V DC) to B2 (9 V PWM) and the vehicle does not enter status C or D within 30 seconds, the charging controller simulates the disconnection of the vehicle from the charging station.

The CP signal is set to -12 V DC for 3 seconds. It then switches back to the PWM signal.

This process is only performed once.

# 5 Wiring of the inputs and outputs

The circuits with lamps and LEDs are only examples. You can also connect other loads (e.g., optocouplers, relays or digital inputs of a controller).

## 5.1 Outputs

In status 0, the outputs are connected to GND and in status 1 they are connected to voltage input 24Va. A power supply of 7.5 V to 30 V DC can be applied at voltage input 24Va.

The maximum current carrying capacity of each switching transistor is 600 mA. The external power supply must be adjusted to the connected power.

**NOTE: Transistor damage**

A supply voltage must never be connected to the outputs, as one of the transistors is controlled at all times and the transistors would be destroyed as a result.

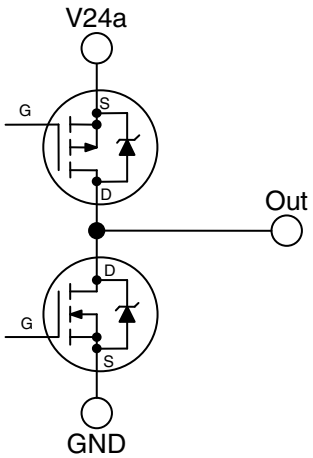


Figure 5-1 Transistor wiring of the outputs

### Connection of high-power loads (e.g., lamps)

The output stages are supplied with the required voltage of 7.5 V DC to 30 V DC maximum via voltage input 24Va. In status 0, the outputs are connected to GND and in status 1 they are connected to 24Va. GND is connected to PE internally. Please note the maximum current capacity of 600 mA per output.

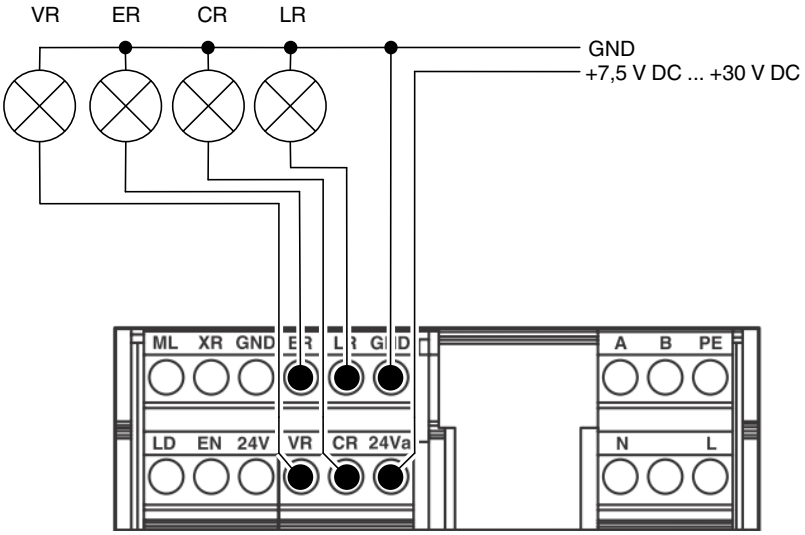


Figure 5-2 Output circuit with lamps

### Connection of loads with low current consumption (e.g., LEDs)

The output stages are supplied with the required 24 V DC voltage from voltage output 24V via voltage input V24a. Voltage output 24V can carry a maximum of 100 mA. In status 0, the outputs are connected to GND and in status 1 they are connected to 24Va. GND is connected to PE internally.

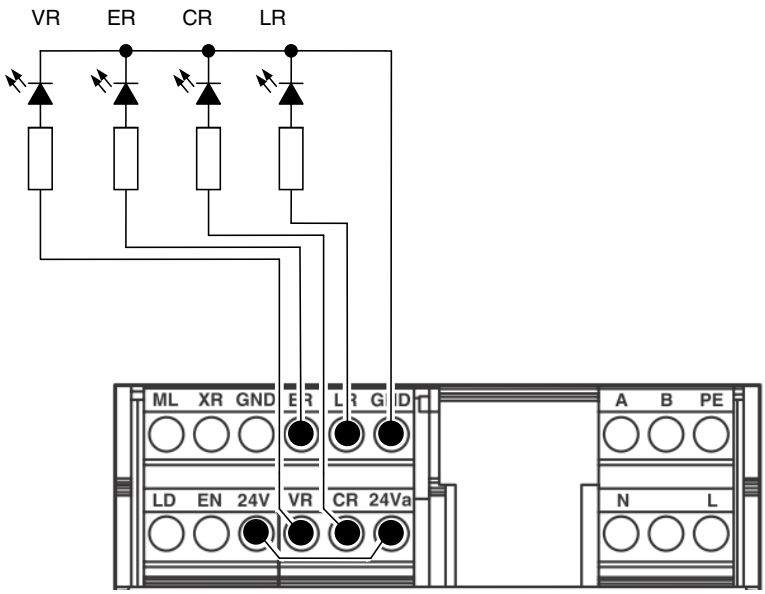


Figure 5-3 Output circuit with LEDs

## 5.2 Inputs

The inputs are designed as voltage dividers for a voltage from -3 V to +30 V.

A current of approximately 8 mA flows across the resistor network at 24 V. Logic 0 is reliably detected at a voltage of -3 V to +5 V. Logic 1 is reliably detected at a voltage of +15 V to +30 V.

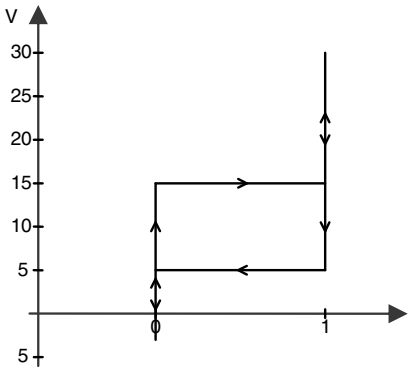


Figure 5-4 Assignment of the logic states to the voltages

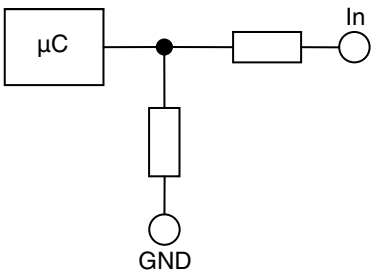


Figure 5-5 Wiring of the digital inputs

The wiring of the inputs is just an example. The inputs with switches can be supplied by the internal voltage source as well as by an external 24 V voltage source which uses GND as the common reference point. The inputs can also be controlled by an external higher-level controller with 24 V outputs. Here too GND is the common reference point.

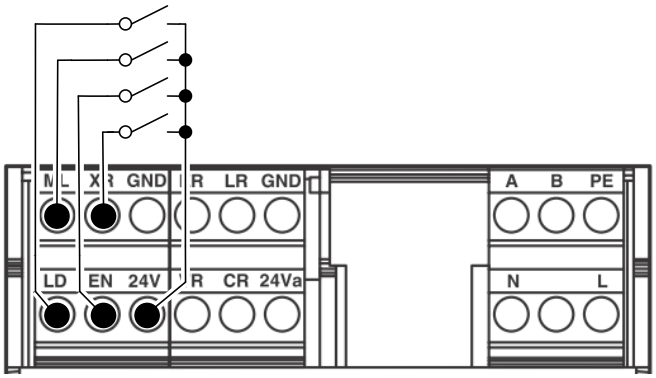


Figure 5-6 Inputs at switches with internal supply

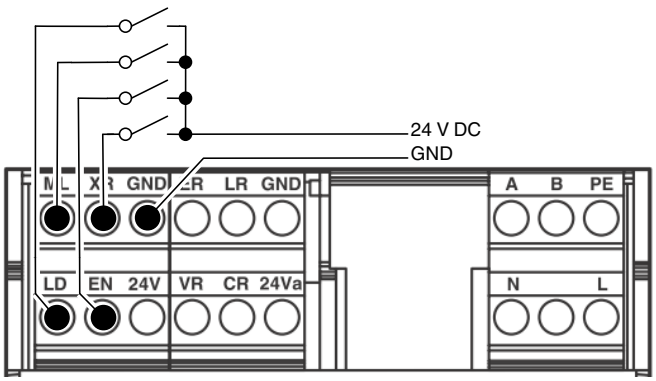


Figure 5-7 Inputs at switches with external supply

## 5.3 Connecting the energy meter to the RS-485 communication interface

Energy meters which have an RS-485 interface and support the Modbus RTU protocol can be connected to the serial interface. For some devices it may be necessary to terminate the cable with a termination resistor.

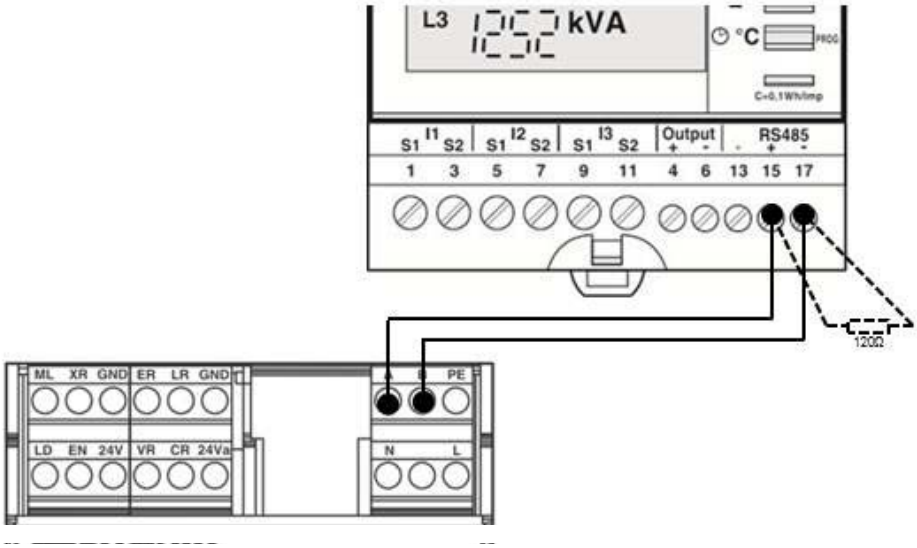


Figure 5-8 Connecting an energy meter using the EEM-MA250 from Phoenix Contact as an example

Connecting energy meters from Phoenix Contact

– EEM-MA250 (Order No. 2901363)

| EM-CP-PP-ETH | EEM-MA 250 |
|---|---|
| A | 15 (+) |
| B | 17 (-) |

– EEM-350-D-MCB (Order No. 2905849)

| EM-CP-PP-ETH | EEM-350-D-MCB |
|---|---|
| A | 42 (B+) |
| B | 41 (A-) |

The connection is configured via the web interface (see “Energy tab” on page 93) or Modbus TCP (“Modbus description” on page 99).

# 6 Connection examples

Table 6-1 Overview of the connection examples

| Example | PX request | Current carrying capacity | Locking | Locking option | Locking confirmation | Enabling of charging depends on | See page |
|---|---|---|---|---|---|---|---|
| 1 | None | – | – | – | – | Input EN | page 36 |
| 2 | None | – | – | – | – | Enable bit in register address 400 | page 37 |
| 3 | PX request | Test | – | – | – | – | page 38 |
| 4 | PX request | – | Automatic | Magnetic | – | – | page 39 |
| 5 | PX request | – | Automatic | Motor-driven | Input LD | – | page 40 |
| 6 | PX request | – | Automatic | Motor-driven | Input LD | Input EN | page 41 |
| 7 | PX request | – | Manual via ML | Motor-driven | Input LD | Input EN | page 42 |
| 8 | PX request | – | Automatic | Magnetic | Input LD | – | page 43 |
| 9 | PX request | – | Automatic | Motor-driven | Input LD | Input EN | page 44 |
| 10 | None | – | – | – | – | Input EN[1] | page 45 |

[1] Additional monitoring of the load contactor via auxiliary contacts

## 6.1 Charging enabled via input EN

DIP 1 = OFF The charging cable is permanently connected.

DIP 7 = ON **Charging is enabled** by the switch via digital input EN.

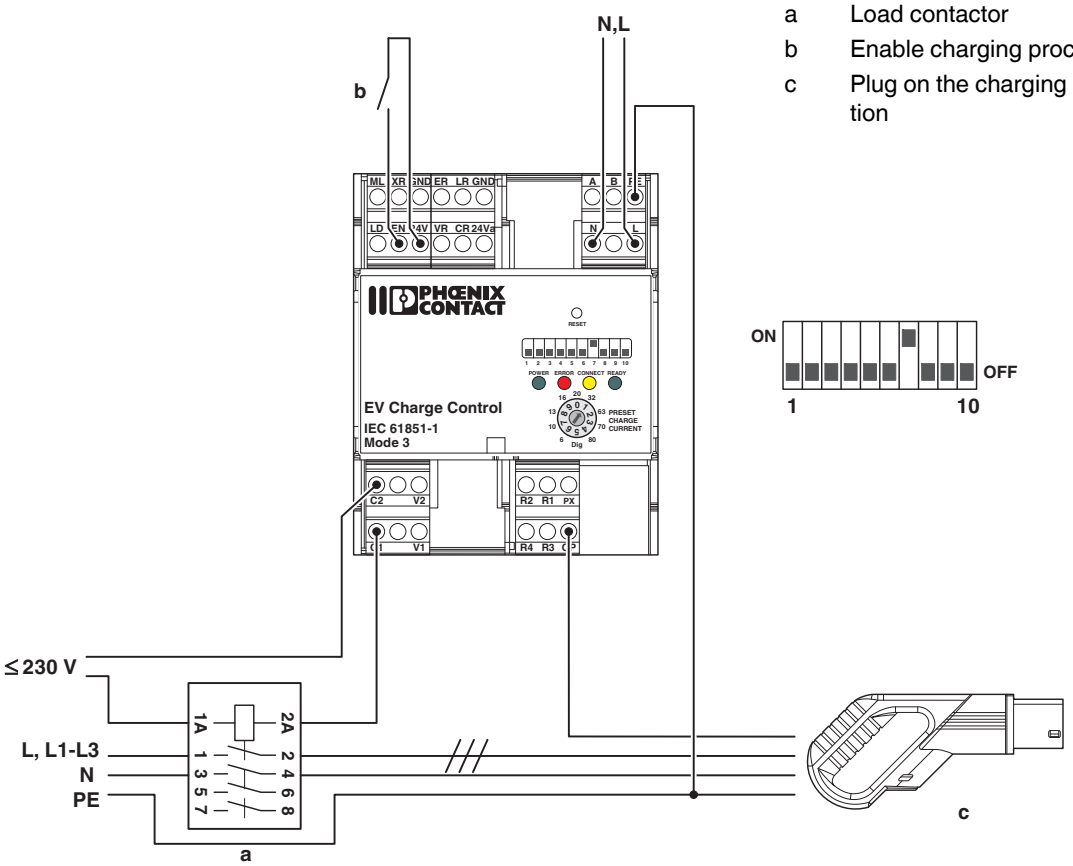


Figure 6-1 Connection example 1

## 6.2 Charging enabled via Ethernet

DIP 1 = OFF The charging cable is permanently connected.

DIP 10 = ON **Charging is enabled** by write access at address 400 via the communication interface or the web interface.

The **charging process** starts automatically:
- When there is a 1 in register address 400
- The vehicle is properly connected
- Status C or D has been detected

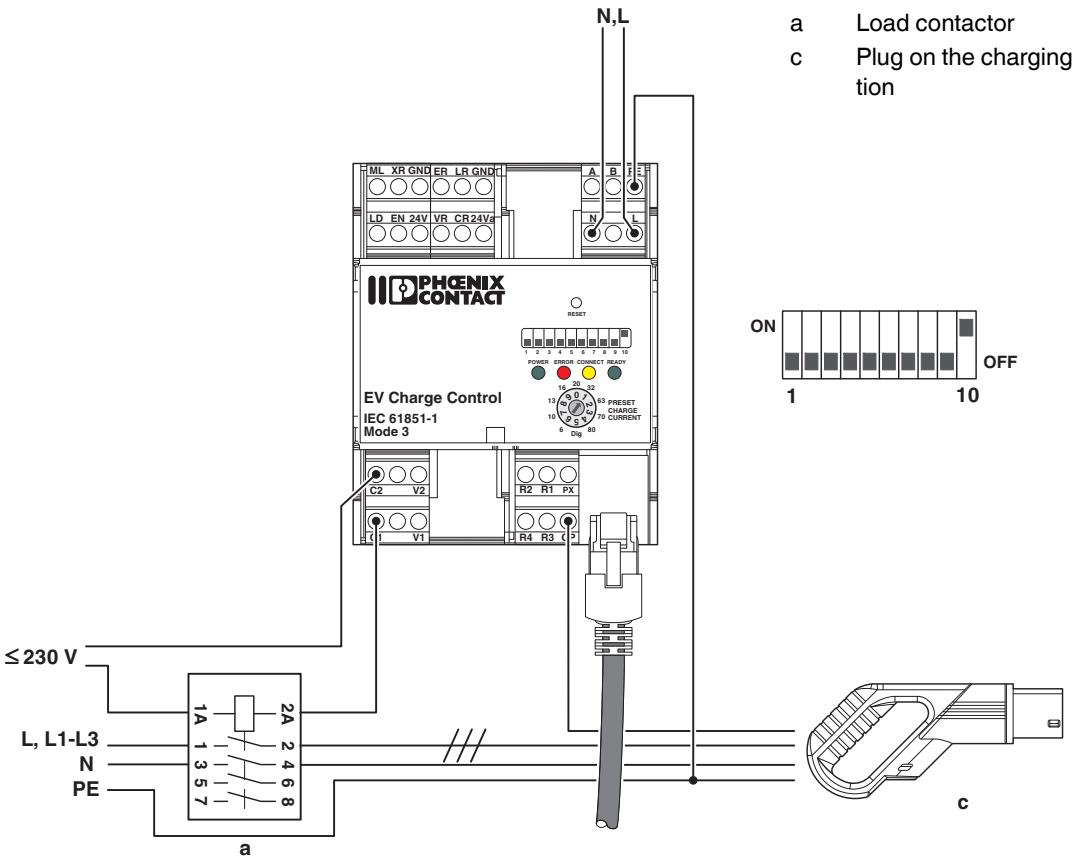


Figure 6-2 Connection example 2

## 6.3 Request of current carrying capacity

DIP 1 = ON — The current carrying capacity of the cable and the plugs is determined via input PX.

DIP 2 = ON
- Option A: a charging cable with a current carrying capacity of 13 A or 20 A is rejected.

DIP 2 + 3 = ON
- Option B: a charging cable with a current carrying capacity of 13 A is rejected.

The **charging process** starts automatically:
- When the current carrying capacity requirements are met (option A/B)
- The vehicle is properly connected
- Status C or D has been detected

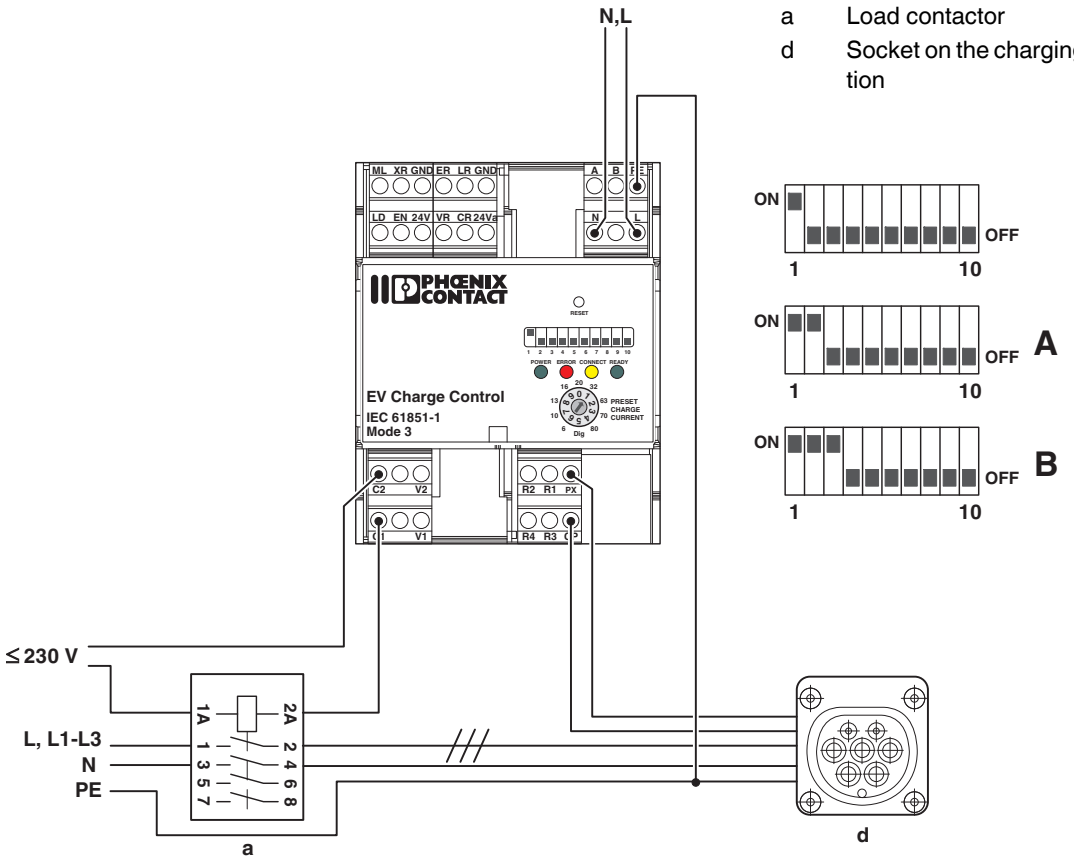


Figure 6-3 Connection example 3

## 6.4 Automatic locking via lifting solenoid

DIP 1 = ON The current carrying capacity of the cable and the plugs is determined via input PX.

DIP 4 = ON Automatic **locking**

DIP 5 = OFF Locking option 0, actuator = lifting solenoid

DIP 6 = OFF No locking confirmation via digital input LD

The **charging process** starts automatically:
- When the vehicle is properly connected
- Status C or D has been detected

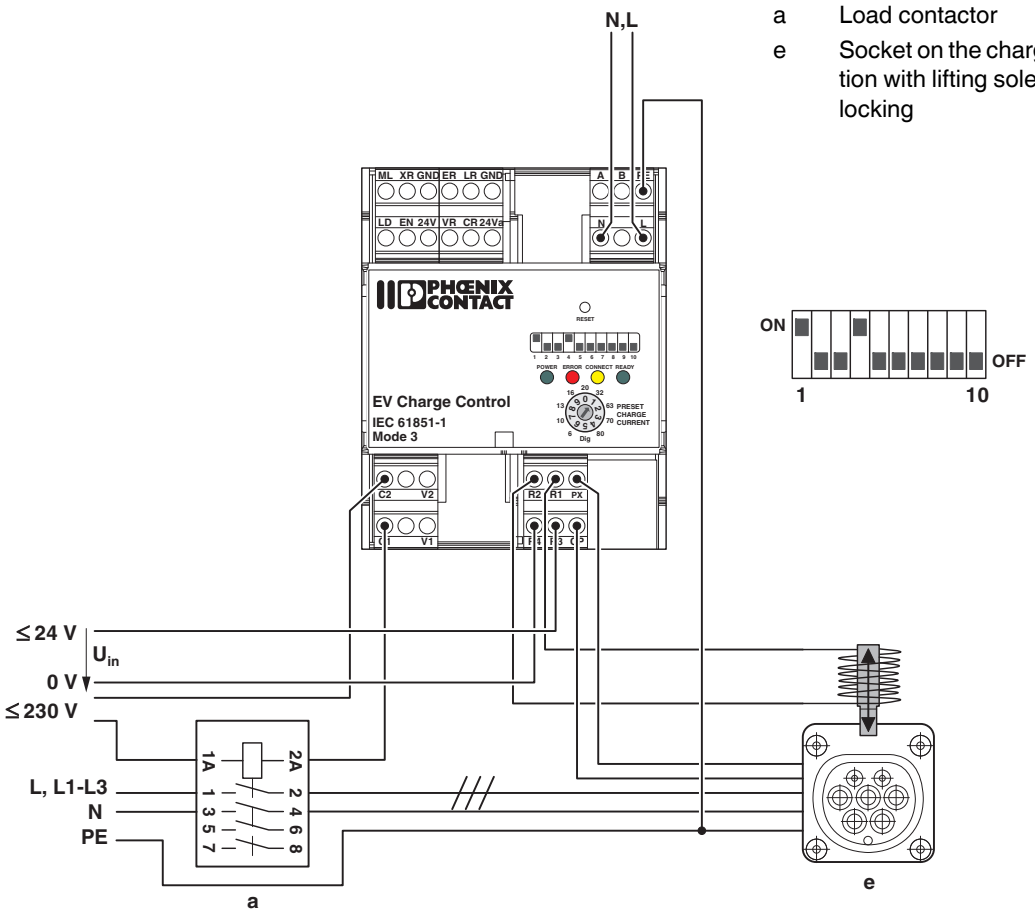


a Load contactor

e Socket on the charging station with lifting solenoid locking

Figure 6-4 Connection example 4

## 6.5 Automatic locking via DC motor with locking confirmation

DIP 1 = ON The current carrying capacity of the cable and the plugs is determined via input PX.

DIP 4 = ON Automatic **locking**

DIP 5 = ON Locking option 1, actuator = DC motor

DIP 6 = ON Locking confirmation via digital input LD

The respective switching times of the actuator are set via the web interface (see “Configuration tab” on page 88).

The **charging process** starts automatically:
- When locking is indicated at input LD
- The vehicle is properly connected
- Status C or D has been detected

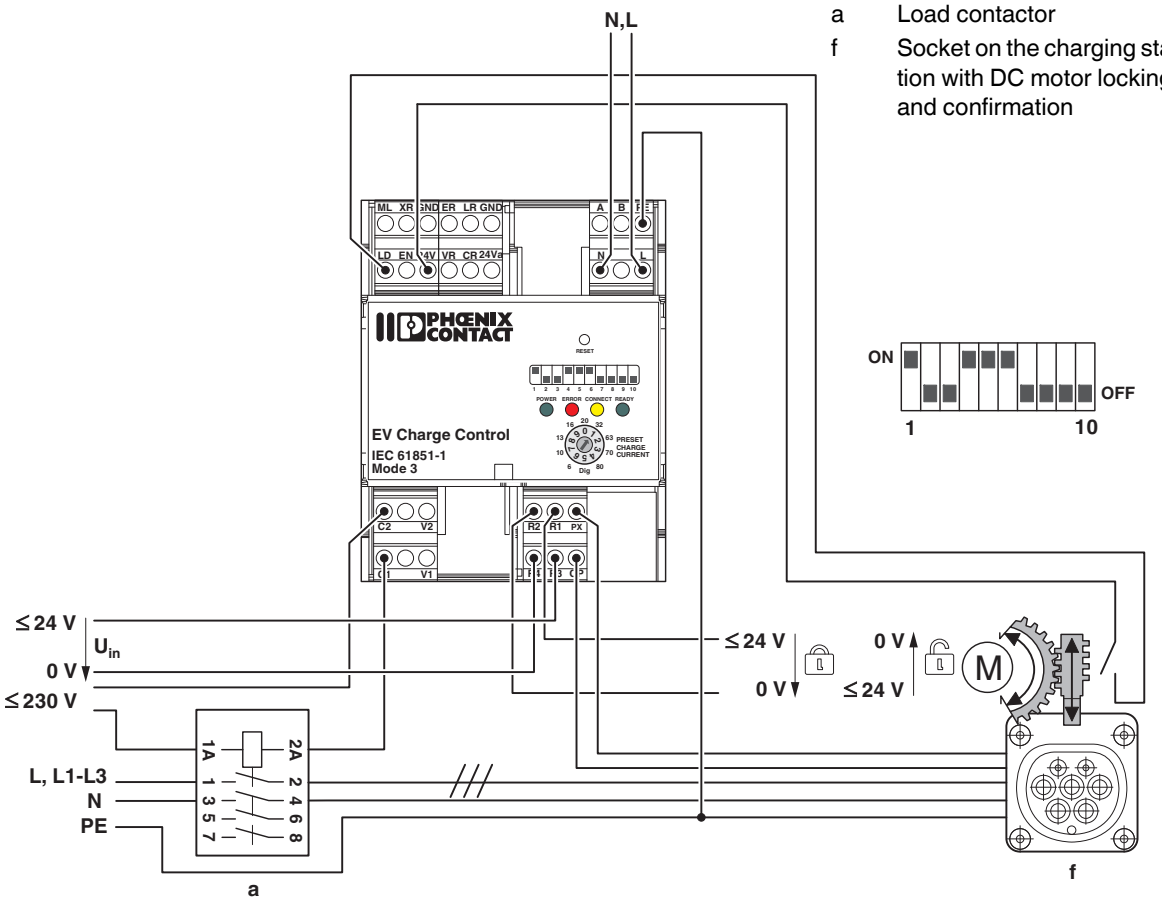


Figure 6-5 Connection example 5

## 6.6 Automatic locking via DC motor with locking confirmation and charging enabled by external controller

DIP 1 = ON — The current carrying capacity of the cable and the plugs is determined via input PX.

DIP 4 = ON — Automatic **locking**

DIP 5 = ON — Locking option 1, actuator = DC motor

DIP 6 = ON — Locking confirmation via digital input LD

The respective switching times of the actuator are set via the web interface (see “Configuration tab” on page 88).

DIP 7 = ON — **Charging is enabled** by external controller via digital input EN and error message at external controller via digital output ER.

The **charging process** starts automatically:
- When input EN is at 24 V
- Locking is indicated at input LD
- The vehicle is properly connected
- Status C or D has been detected

a Load contactor

f Socket on the charging station with DC motor locking and confirmation

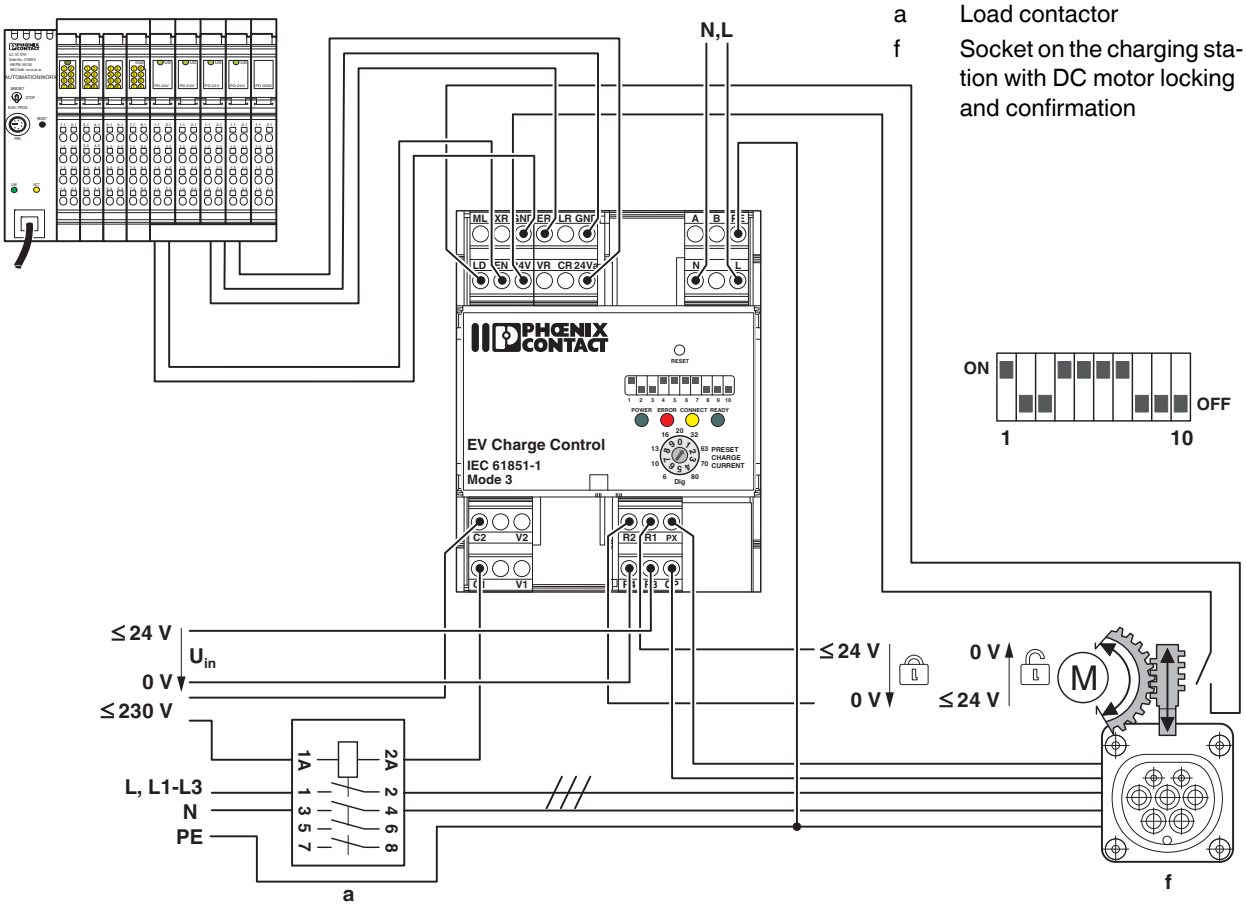


Figure 6-6 Connection example 6

## 6.7 Manual locking via DC motor with locking confirmation and charging enabled via input EN

DIP 1 = ON — The current carrying capacity of the cable and the plugs is determined via input PX.

DIP 4 + 9 = ON — Manual **locking** via button at digital input ML

DIP 5 = ON — Locking option 1, actuator = DC motor

DIP 6 = ON — Locking confirmation via digital input LD

The respective switching times of the actuator are set via the web interface (see “Configuration tab” on page 88).

The plug is locked and unlocked by pulses of at least 200 ms at digital input ML.

DIP 7 = ON — **Charging is enabled** by the switch via digital input EN.

The **charging process** starts automatically:
- When input EN is at 24 V
- Locking is indicated at input LD
- The vehicle is properly connected
- Status C or D has been detected

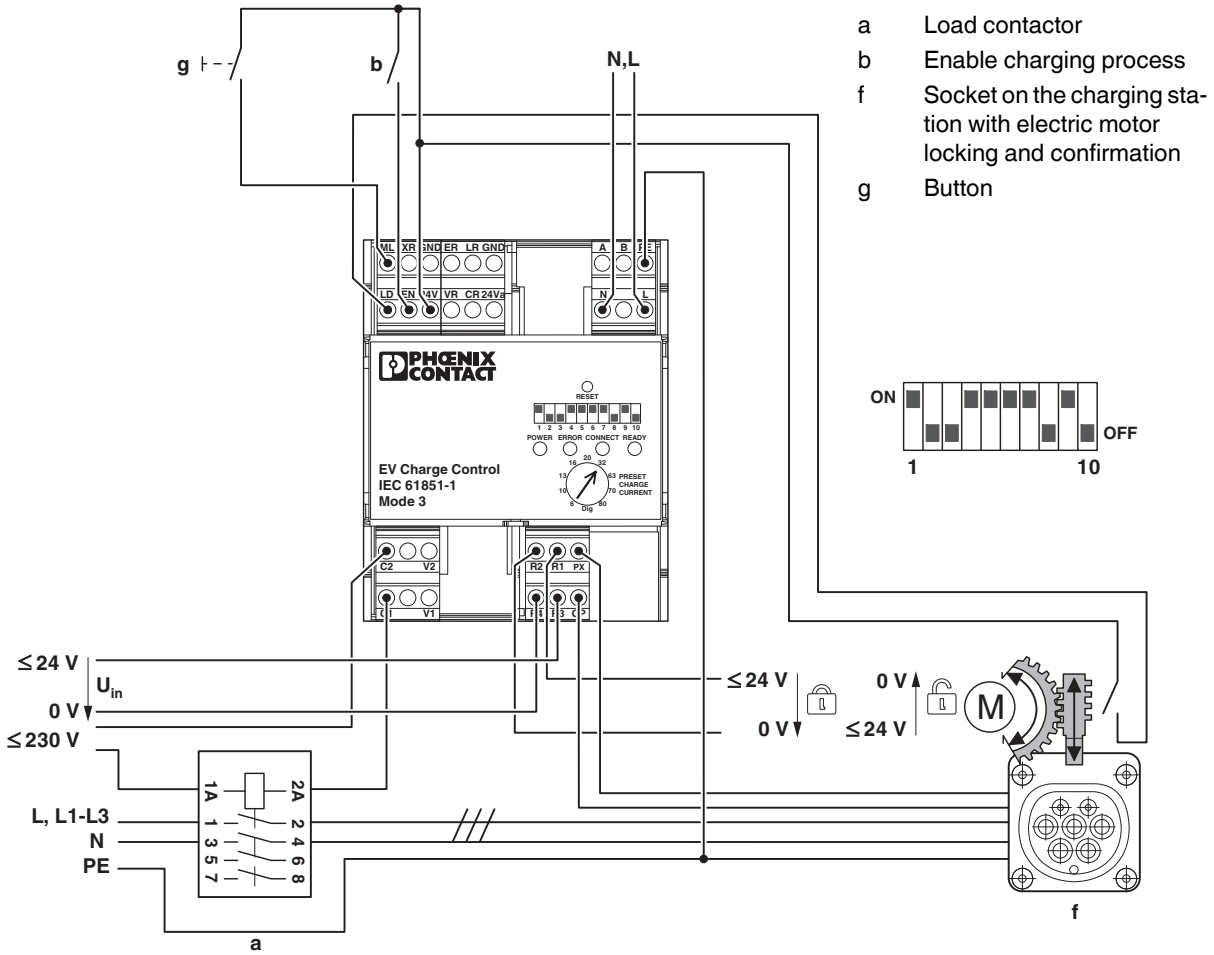


Figure 6-7 Connection example 7

## 6.8 Automatic locking via lifting solenoid with locking confirmation

DIP 1 = ON The current carrying capacity of the cable and the plugs is determined via input PX.

DIP 4 = ON Automatic **locking**

DIP 5 = OFF Locking option 0, actuator = lifting solenoid

DIP 6 = ON Locking confirmation via digital input LD

The **charging process** starts automatically:
- When locking is indicated at input LD
- The vehicle is properly connected
- Status C or D has been detected

a Load contactor

e Socket on the charging station with lifting solenoid locking

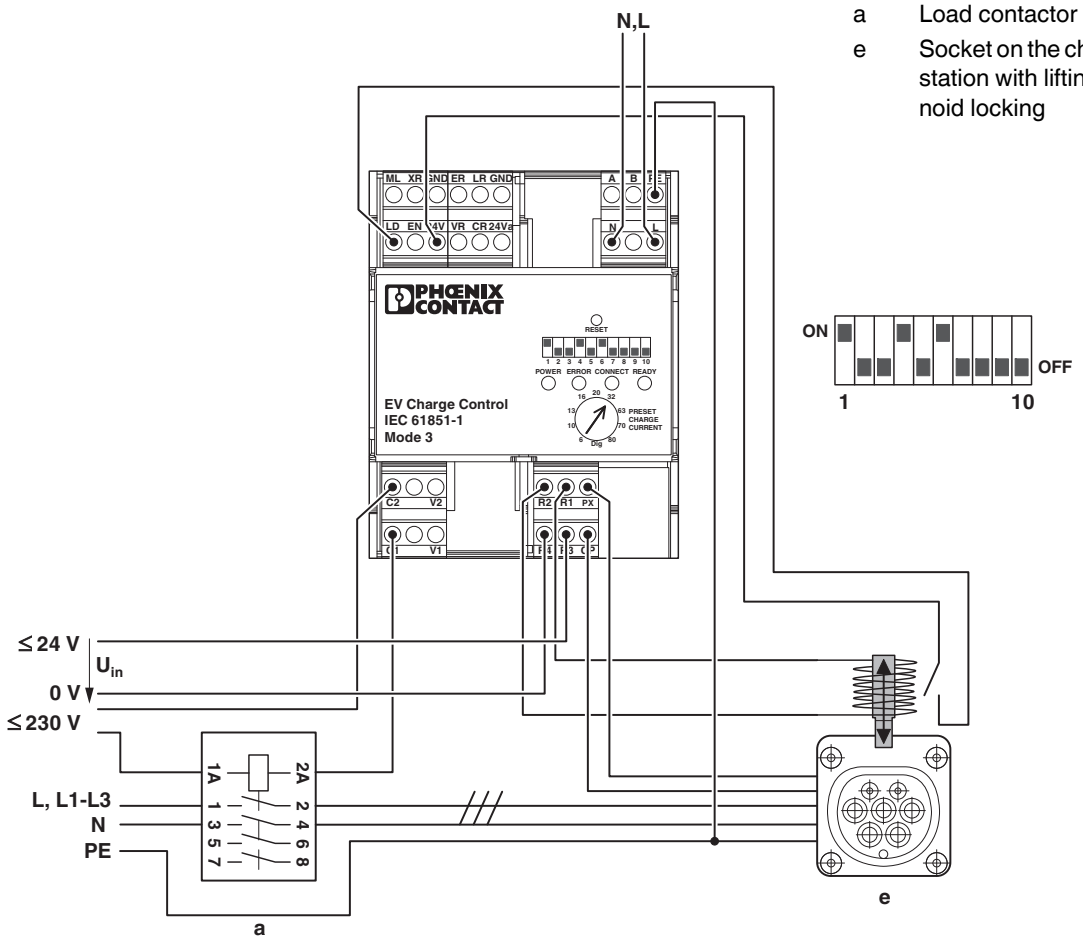


Figure 6-8 Connection example 8

## 6.9 Automatic locking via DC motor with locking confirmation and charging enabled via input EN

DIP 1 = ON The current carrying capacity of the cable and the plugs is determined via input PX.

DIP 4 = ON Automatic **locking**

DIP 5 = ON Locking option 1, actuator = DC motor

DIP 6 = ON Locking confirmation via digital input LD

The respective switching times of the actuator are set via the web interface (see “Configuration tab” on page 88).

DIP 7 = ON **Charging is enabled** by the switch via digital input EN.

The **charging process** starts automatically:
- When input EN is at 24 V
- Locking is indicated at input LD
- The vehicle is properly connected
- Status C or D has been detected

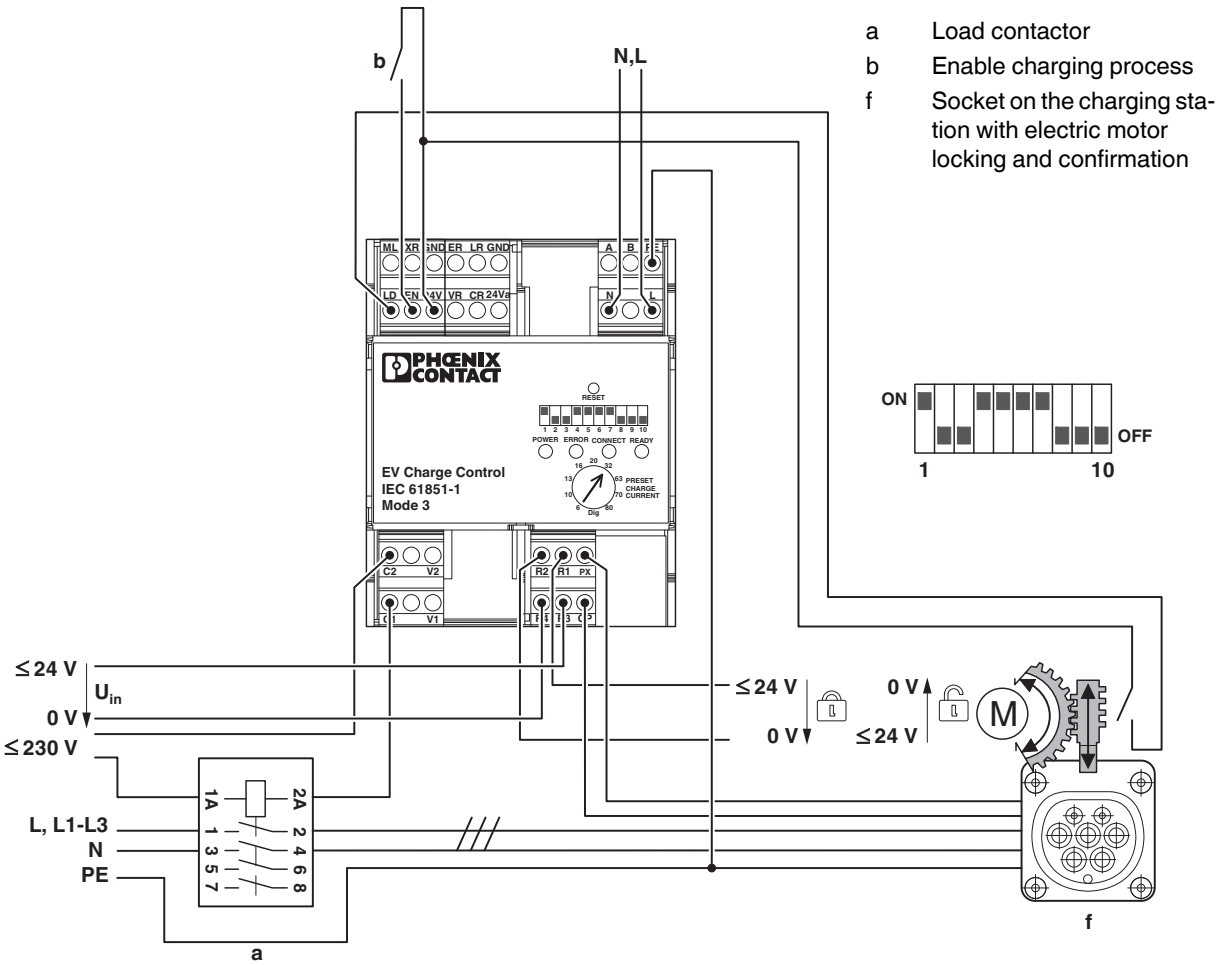


Figure 6-9 Connection example 9

## 6.10 Monitoring the load contactor via auxiliary contacts

DIP 1 = OFF The charging cable is permanently connected.

DIP 7 = ON **Charging is enabled** by the switch via digital input EN.

DIP 8 = OFF Modified evaluation of input XR. The evaluation is configured via the web interface or as an alternative, via Modbus.

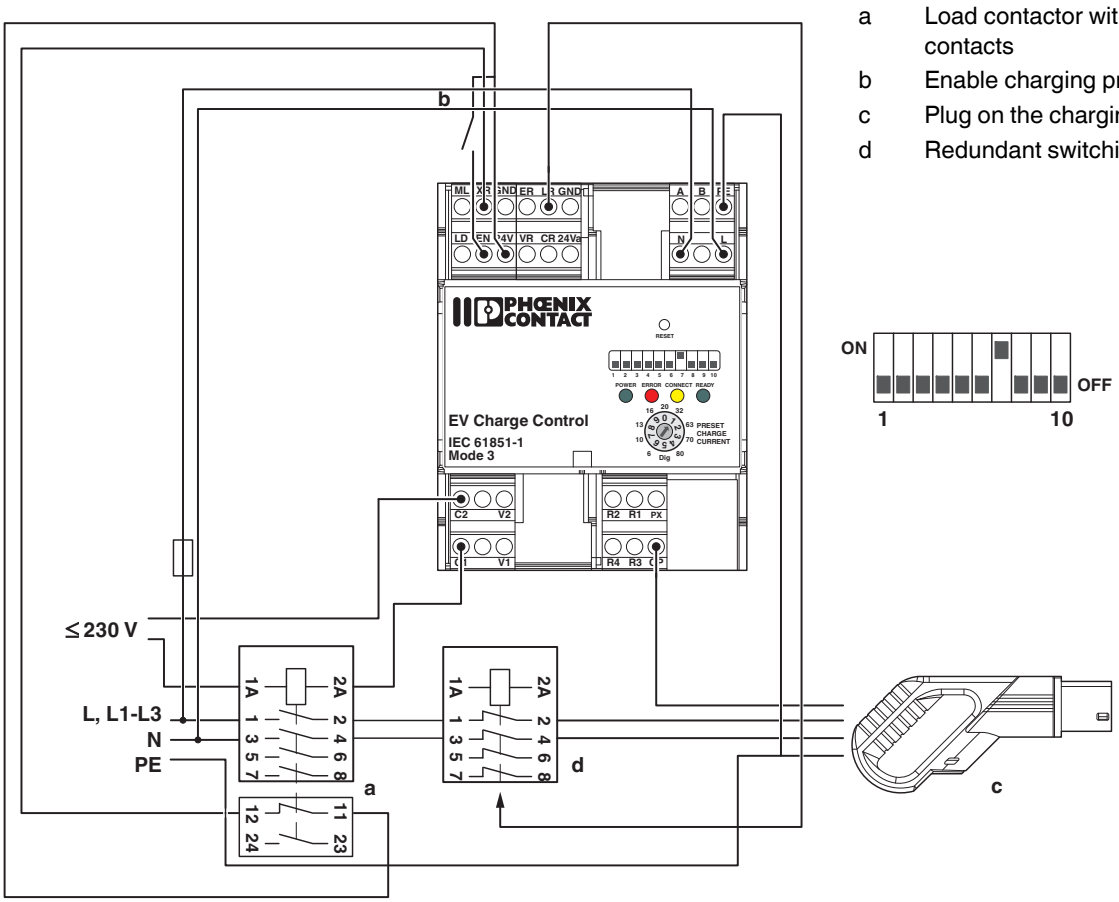


Figure 6-10 Connection example 10

**Web interface**

- Click the “Energy” tab, and then click the “EM Config” button.
- Under “Contactor Monitoring”, select “Aux. Contact NC” (NC = Normally Closed) from the list.
- On the “Status” tab, for output “LR”, select “Contactor Failure” from the list.

**Modbus registers**

| Address | Value | Explanation |
|---|---|---|
| 390 | 3 | Evaluation of the N/C auxiliary contact on the load contactor |
| 519 | 500 | Delay for evaluation of the auxiliary contact, 500 ms (default) |
| 328 | 35 | LR is configured for the event “contactor error” |

# 7 Sequence diagrams for charging process

The examples are based on the default configuration of the digital outputs (““Status” tab” on page 84).

**Default value**

Table 7-1 Preset configuration of the digital outputs

| Digital output | Default value |
|---|---|
| CR | PWM on |
| LR | Locking Request |
| VR | State C or D |
| ER | State E or State F (Error) |

Table 7-2 Overview of the charging sequences

| Charging sequence | PX request | Current carrying capacity | Locking | Locking option | Locking confirmation | Charging station availability | Enabling of charging depends on | See page |
|---|---|---|---|---|---|---|---|---|
| 1 | None | – | – | – | – | – | – | 48 |
| 2 | PX request | – | – | – | – | – | – | 50 |
| 3 | PX request | Test | – | – | – | – | – | 52 |
| 4 | None | – | Manual | Magnetic | – | – | – | 55 |
| 5 | None | – | Automatic | Magnetic | – | – | – | 59 |
| 6 | None | – | Automatic | Motor-driven | – | – | – | 62 |
| 7 | None | – | Automatic | Motor-driven | Input LD | – | – | 65 |
| 8 | None | – | Automatic | Magnetic | – | – | Input EN | 69 |
| 9 | None | – | Automatic | Magnetic | – | Input XR | – | 72 |
| 10 | None | – | Manual | Magnetic | – | – | Input EN<br>Enable bit in register address 400 | 76 |
| 11 | PX request | Test | Manual | Motor-driven | Input LD | Input XR | Input EN<br>Enable bit in register address 400 | 79 |

## 7.1 Charging sequence 1

DIP 1 = OFF **No PX request, permanently connected charging cable (case C with status C and D)**

If the system is switched on, the PW (POWER) LED is constantly lit.

If the system is being initialized, the PW (POWER) LED flashes at 2 Hz. Vehicle status A is reached.

All outputs are at 0. No relay is set. Evaluation of the inputs is started immediately.

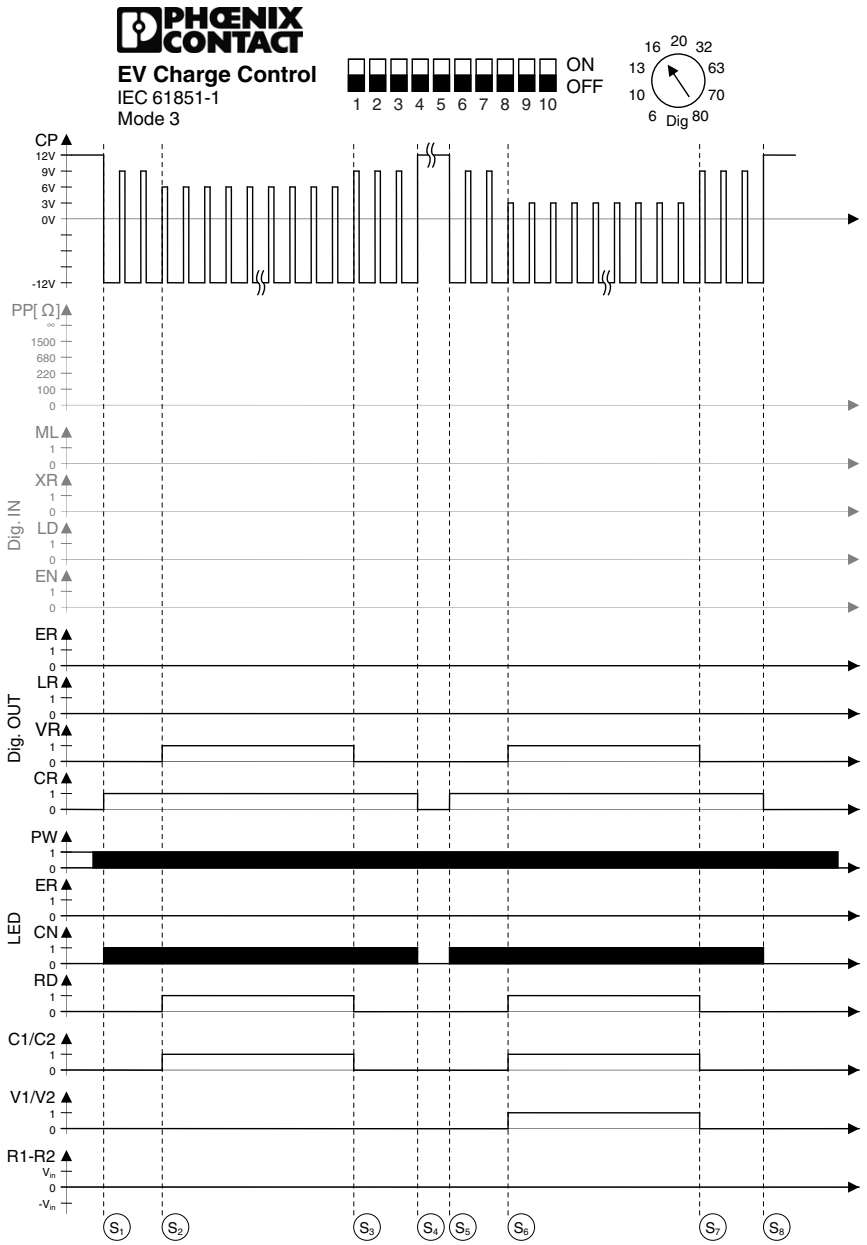


Figure 7-1 Charging sequence 1

| Vehicle status in Figure 7-1 | | Charging sequence 1 |
|---|---|---|
| **With status C, charging without ventilation** | | |
| **S1** | Status B | The charging plug is inserted into the charging socket on the vehicle.<br>The electric vehicle is detected by means of the CP signal (Control Pilot).<br>The voltage at CP drops to 9 V, the PWM signal indicates the maximum permissible charging current to the vehicle.<br>Digital output CR (Charger Ready) is set.<br>The CN (CONNECT) LED flashes at a frequency of 2 Hz. |
| **S2** | Status C | The electric vehicle switches S2 on (see “Control Pilot wiring” on page 22), the voltage at CP drops to 6 V.<br>Digital output VR (Vehicle Ready) is set.<br>The RD (READY) LED is constantly lit.<br>Relay contacts C1 and C2 are closed.<br>The charging process is started. |
| **S3** | Status B | The electric vehicle aborts charging and switches S2 off.<br>The voltage at CP returns to 9 V.<br>Digital output VR (Vehicle Ready) is deleted.<br>The RD (READY) LED is no longer lit.<br>Relay contacts C1 and C2 are opened again. |
| **S4** | Status A | The charging plug is no longer connected to the vehicle.<br>The PWM signal is switched off.<br>The voltage at CP returns to the idling value of 12 V.<br>Digital output CR is deleted.<br>The CN (CONNECT) LED goes out.<br>The device returns to the initial status. |
| **With status D, charging with ventilation** | | |
| **S5** | Status B | See above |
| **S6** | Status D | The electric vehicle switches S2 on, the voltage at CP drops to 3 V.<br>Digital output VR (Vehicle Ready) is set.<br>The RD (READY) LED is constantly lit.<br>Relay contacts C1 and C2 are closed.<br>Relay contacts V1 and V2 are also closed. |
| **S7** | Status B | See above |
| **S8** | Status A | See above |

## 7.2 Charging sequence 2

DIP 1 = ON

**PX request, charging cable with plug on the charger (case B)**

The current carrying capacity of the cable and the plugs is determined via the Proximity Plug and the appropriate resistance circuit in the plug (see “Proximity Plug wiring” on page 21).

If the PRESET CHARGE CURRENT rotary switch is set to a higher current than the Proximity Plug is able to detect, the proximity value limits the current so that the cable or the plugs cannot be overloaded.

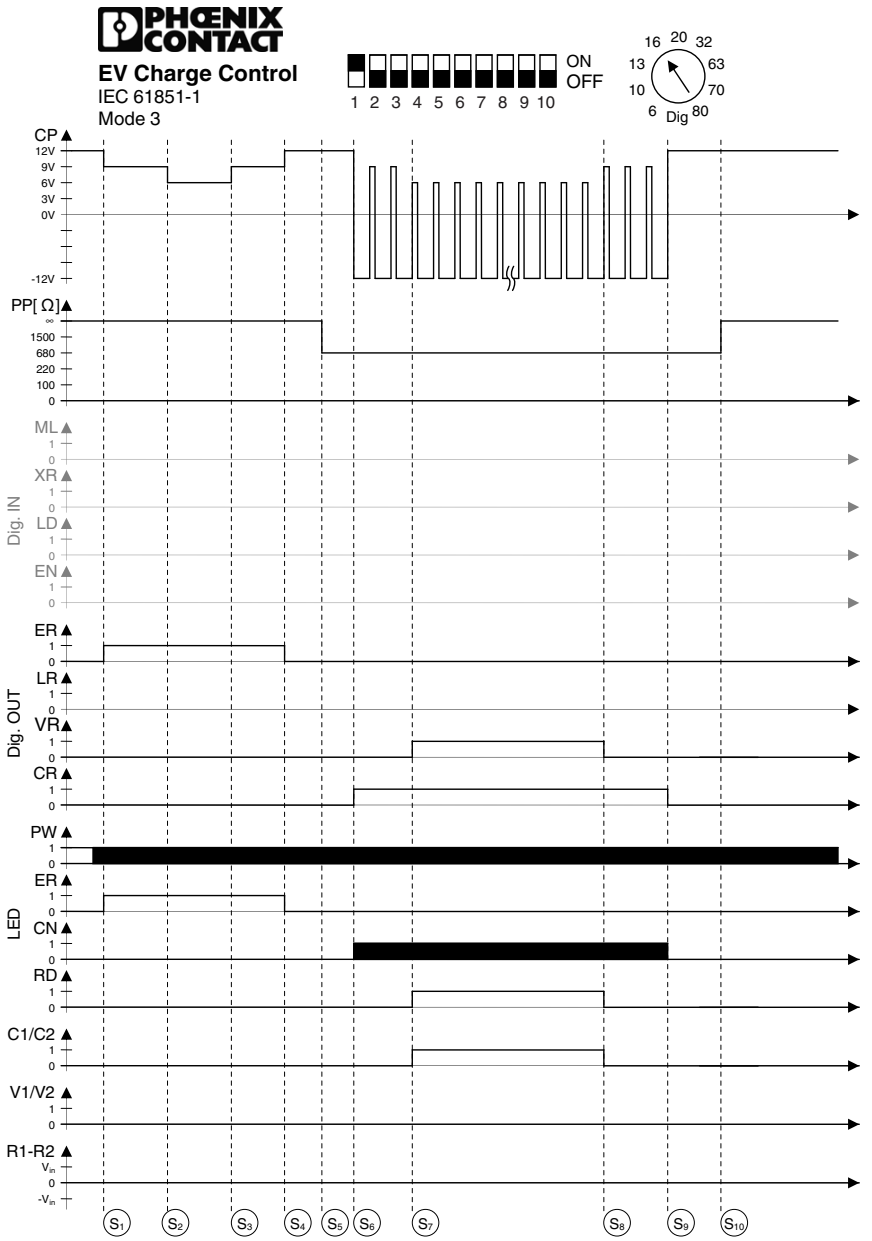


Figure 7-2 Charging sequence 2

| Vehicle status in Figure 7-2 | | Charging sequence 2 |
|---|---|---|
| **S1** | Status E | The charging plug is inserted into the charging socket on the vehicle.<br>The electric vehicle is detected by means of the CP signal (Control Pilot).<br>The voltage at CP drops to 9 V, a PWM signal is not generated because input PX detects an open connection.<br>No Proximity Plug detected in the charging plug or no suitable resistance value.<br>Digital output ER (Error) is set.<br>The ER (ERROR) LED is constantly lit. |
| **S2** | | The electric vehicle switches S2 on (see “Control Pilot wiring” on page 22), the voltage at CP drops to 6 V.<br>No changes at the outputs and LEDs. |
| **S3** | | The electric vehicle aborts charging and switches S2 off.<br>The voltage at CP returns to 9 V.<br>No changes at the outputs and LEDs. |
| **S4** | Status A | The charging plug is no longer connected to the vehicle.<br>Digital output ER (Error) is deleted.<br>The ER (ERROR) LED is switched off.<br>The device returns to the initial status. |
| **S5** | | The charging cable is connected to the device.<br>The resistance value of 680 ohms is detected at the Proximity Plug. This value indicates to the device that the cable or plug has a current carrying capacity of 20 A. |
| **S6** | Status B | The charging plug is inserted into the charging socket on the vehicle.<br>The electric vehicle is detected by means of the CP signal (Control Pilot).<br>The voltage at CP drops to 9 V, the PWM signal indicates the maximum permissible charging current to the vehicle.<br>Digital output CR (Charger Ready) is set.<br>The CN (CONNECT) LED flashes at a frequency of 2 Hz. |
| **S7** | Status C | The electric vehicle switches S2 on (see “Control Pilot wiring” on page 22), the voltage at CP drops to 6 V.<br>Digital output VR (Vehicle Ready) is set.<br>The RD (READY) LED is constantly lit.<br>Relay contacts C1 and C2 are closed. |
| **S8** | Status B | The electric vehicle aborts charging and switches S2 off.<br>The voltage at CP returns to 9 V.<br>Digital output VR (Vehicle Ready) is deleted.<br>The RD (READY) LED is no longer lit.<br>Relay contacts C1 and C2 are opened again. |
| **S9** | Status A | The charging plug is no longer connected to the vehicle.<br>The PWM signal is switched off.<br>The voltage at CP returns to the idling value of 12 V.<br>Digital output CR is deleted. The CN LED goes out.<br>The device returns to the initial status. |
| **S10** | | The charging cable was removed from the charging station.<br>The Proximity Plug detects an open input.<br>The system returns to the initial status. |

## 7.3 Charging sequence 3

DIP 1 = ON **PX request, charging cable with plug on the charger (case B)**

The current carrying capacity of the cable and the plugs is determined via the Proximity Plug and the appropriate resistance circuit in the plug (see “Proximity Plug wiring” on page 21).

If the PRESET CHARGE CURRENT rotary switch is set to a higher current than the Proximity Plug is able to detect, the proximity value limits the current so that the cable or the plugs cannot be overloaded.

DIP 2 = ON **Plug/cable with low current carrying capacity is rejected**

For values below the limit values, an error is issued and charging cannot be started.

DIP 3 = ON **13 A plug/cable is rejected**

Plugs or cables with a current carrying capacity below 32 A are rejected (13 A and 20 A).

DIP 3 = OFF **13 A and 20 A plug/cable is rejected**

Plugs or cables with a current carrying capacity below 20 A are rejected (13 A).

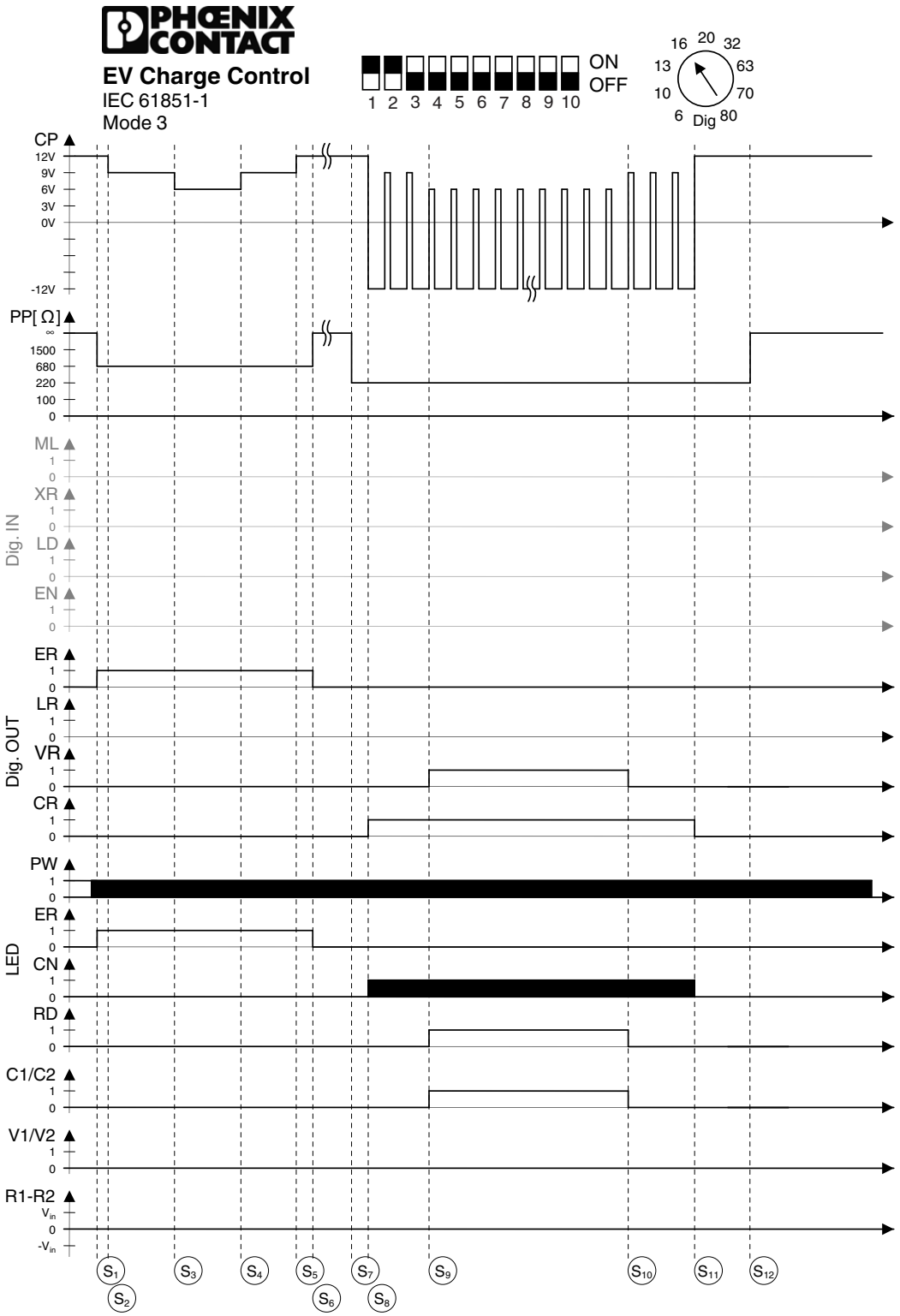


Figure 7-3 Charging sequence 3

| Vehicle status in Figure 7-3 | | Charging sequence 3 |
|---|---|---|
| **S1** | Status E | The charging cable is connected to the device. The resistance value of 680 ohms is detected at the Proximity Plug. This value indicates to the device that the cable or plug has a current carrying capacity of 20 A. Digital output ER (Error) is set. The ER (Error) LED is constantly lit. |
| **S2** | | The charging plug is inserted into the charging socket on the vehicle. The electric vehicle is detected by means of the CP signal (Control Pilot). The voltage at CP drops to 9 V, a PWM signal is not generated because input PX detects a value that is too low. A resistance value is detected for the Proximity Plug in the charging plug that exceeds the permissible value. |
| **S3** | | The electric vehicle switches S2 on (see “Control Pilot wiring” on page 22), the voltage at CP drops to 6 V. No changes at the outputs and LEDs. |
| **S4** | | The electric vehicle aborts charging and switches S2 off. The voltage at CP returns to 9 V. No changes at the outputs and LEDs. |
| **S5** | | The charging plug is no longer connected to the vehicle. |
| **S6** | Status A | The charging cable is no longer connected to the device. The device returns to the initial status. Digital output ER (Error) is deleted. The ER (Error) LED is switched off. |
| **S7** | | The charging cable is connected to the device. The resistance value of 220 ohms is detected at the Proximity Plug. This value indicates to the device that the cable or plug has a current carrying capacity of 32 A. |
| **S8** | Status B | The charging plug is inserted into the charging socket on the vehicle. The electric vehicle is detected by means of the CP signal (Control Pilot). The voltage at CP drops to 9 V, the PWM signal indicates the maximum permissible charging current to the vehicle. Digital output CR (Charger Ready) is set. The CN (Connect) LED flashes at a frequency of 2 Hz. |
| **S9** | Status C | The electric vehicle switches S2 on (see “Control Pilot wiring” on page 22), the voltage at CP drops to 6 V. Digital output VR (Vehicle Ready) is set. The RD (Ready) LED is constantly lit. Relay contacts C1 and C2 are closed. |
| **S10** | Status B | The electric vehicle aborts charging and switches S2 off. The voltage at CP returns to 9 V. Digital output VR (Vehicle Ready) is deleted. The RD (Ready) LED is no longer lit. Relay contacts C1 and C2 are opened again. |
| **S11** | Status A | The charging plug is no longer connected to the vehicle. The PWM signal is switched off. The voltage at CP returns to the idling value of 12 V. Digital output CR is deleted. The CN LED goes out. The device returns to the initial status. |
| **S12** | | The charging cable was removed from the charging station. The Proximity Plug detects an open input. The system returns to the initial status. |

## 7.4 Charging sequence 4

DIP 1 = OFF **No PX request, permanently connected charging cable (case C)**

The Proximity Plug is not evaluated. The charging cable is permanently connected to the charging station.

DIP 4 = ON **Locking is executed**

DIP 5 = OFF **Locking option 0**

- Lifting solenoid
- R1-R3 is controlled (R1 at ≤ 24 V) for as long as locking is required
- R2-R4 remains in the initial status (R2 at 0 V) the entire time

During locking, the locking output is constantly supplied with power, which means that the lifting solenoid is permanently picked up.

DIP 9 = ON **Manual locking: input ML is evaluated**

Input ML is configured on the controller via pulses using the web interface. Locking is switched on/off with every pulse at digital input ML. The pulse must be at least 200 ms long.

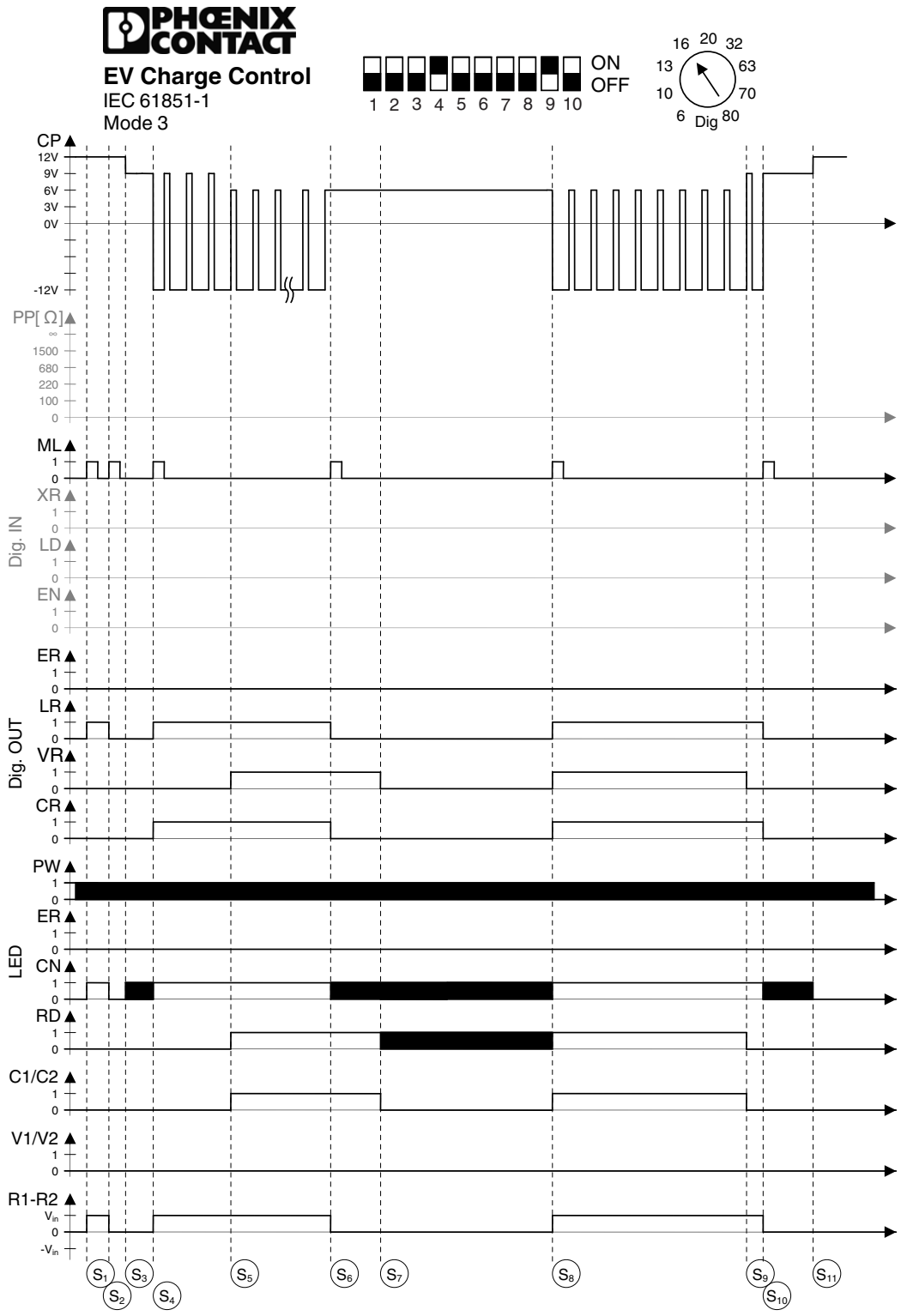


Figure 7-4 Charging sequence 4

| Vehicle status in Figure 7-4 | | Charging sequence 4 |
|---|---|---|
| **S1** | Status A | The system is in the initial status. A signal pulse is generated at digital input ML.<br>Digital output LR (Locking Request) is switched on.<br>The CN (Connect) LED lights up. The voltage at locking output R2-R1 is switched on. |
| **S2** | | A signal pulse is generated at digital input ML.<br>Digital output LR (Locking Request) is switched off again.<br>The CN (Connect) LED is no longer lit.<br>The voltage at locking output R2-R1 is switched off again. |
| **S3** | Status B | The charging plug is inserted into the charging socket on the vehicle.<br>The electric vehicle is detected by means of the CP signal (Control Pilot).<br>The voltage at CP drops to 9 V, a PWM signal is not generated because the plug is not locked.<br>The CN (Connect) LED flashes at a frequency of 2 Hz. |
| **S4** | | A signal pulse is generated at digital input ML.<br>Digital output LR (Locking Request) is switched on.<br>The CN (Connect) LED lights up. The voltage at locking output R2-R1 is switched on.<br>The PWM signal indicates the maximum permissible charging current to the vehicle.<br>Digital output CR (Charger Ready) is set.<br>The CN (Connect) LED flashes at a frequency of 2 Hz. |
| **S5** | | The electric vehicle switches S2 on (see “Control Pilot wiring” on page 22), the voltage at CP drops to 6 V.<br>Digital output VR (Vehicle Ready) is set.<br>The RD (Ready) LED is constantly lit.<br>Relay contacts C1 and C2 are closed. |
| **S6** | Status C | A signal pulse is generated at digital input ML.<br>Digital output LR (Locking Request) is switched off again.<br>Digital output CR (Charger Ready) is switched off again.<br>The CN (Connect) LED flashes at 2 Hz again.<br>The voltage at locking output R2-R1 is switched off again. |
| **S7** | | After a maximum waiting time of 3 s, relay contacts C1 and C2 are opened again.<br>Digital output VR (Vehicle Ready) is reset again.<br>The RD (Ready) LED flashes again. |
| **S8** | | A signal pulse is generated at digital input ML.<br>The PWM signal indicates the maximum permissible charging current to the vehicle again.<br>Digital output LR (Locking Request) is switched on again.<br>Digital output VR (Vehicle Ready) is switched on again.<br>Digital output CR (Charger Ready) is switched on again.<br>The CN (Connect) LED is constantly lit again.<br>The RD (Ready) LED is constantly lit again.<br>Relay contacts C1 and C2 are closed again.<br>The voltage at locking output R2-R1 is switched on again. |

| Vehicle status in Figure 7-4 | | Charging sequence 4 [...] |
|---|---|---|
| **S9** | Status B | The electric vehicle aborts charging and switches S2 off.<br>The voltage at CP returns to 9 V.<br>Digital output VR (Vehicle Ready) is deleted.<br>The RD (Ready) LED is no longer lit.<br>Relay contacts C1 and C2 are opened again. |
| **S10** | | A signal pulse is generated at digital input ML.<br>The PWM signal is switched off.<br>Digital output LR (Locking Request) is switched off again.<br>Digital output CR (Charger Ready) is switched off again.<br>The CN (Connect) LED flashes at 2 Hz again.<br>The voltage at locking output R2-R1 is switched off again. |
| **S11** | Status A | The charging plug is no longer connected to the vehicle.<br>The voltage at CP returns to the idling value of 12 V.<br>The CN LED goes out. The device returns to the initial status. |

## 7.5 Charging sequence 5

DIP 1 = OFF **No PX request, permanently connected charging cable (case C)**

The Proximity Plug is not evaluated. The charging cable is permanently connected to the charging station.

DIP 4 = ON **Locking is executed**

DIP 5 = OFF **Locking option 0**

- Lifting solenoid
- R1-R3 is controlled (R1 at ≤ 24 V) for as long as locking is required
- R2-R4 remains in the initial status (R2 at 0 V) the entire time

During locking, the locking output is constantly supplied with power, which means that the lifting solenoid is permanently picked up.

DIP 9 = OFF **Manual locking: input ML is not evaluated**

Locking is automatic.

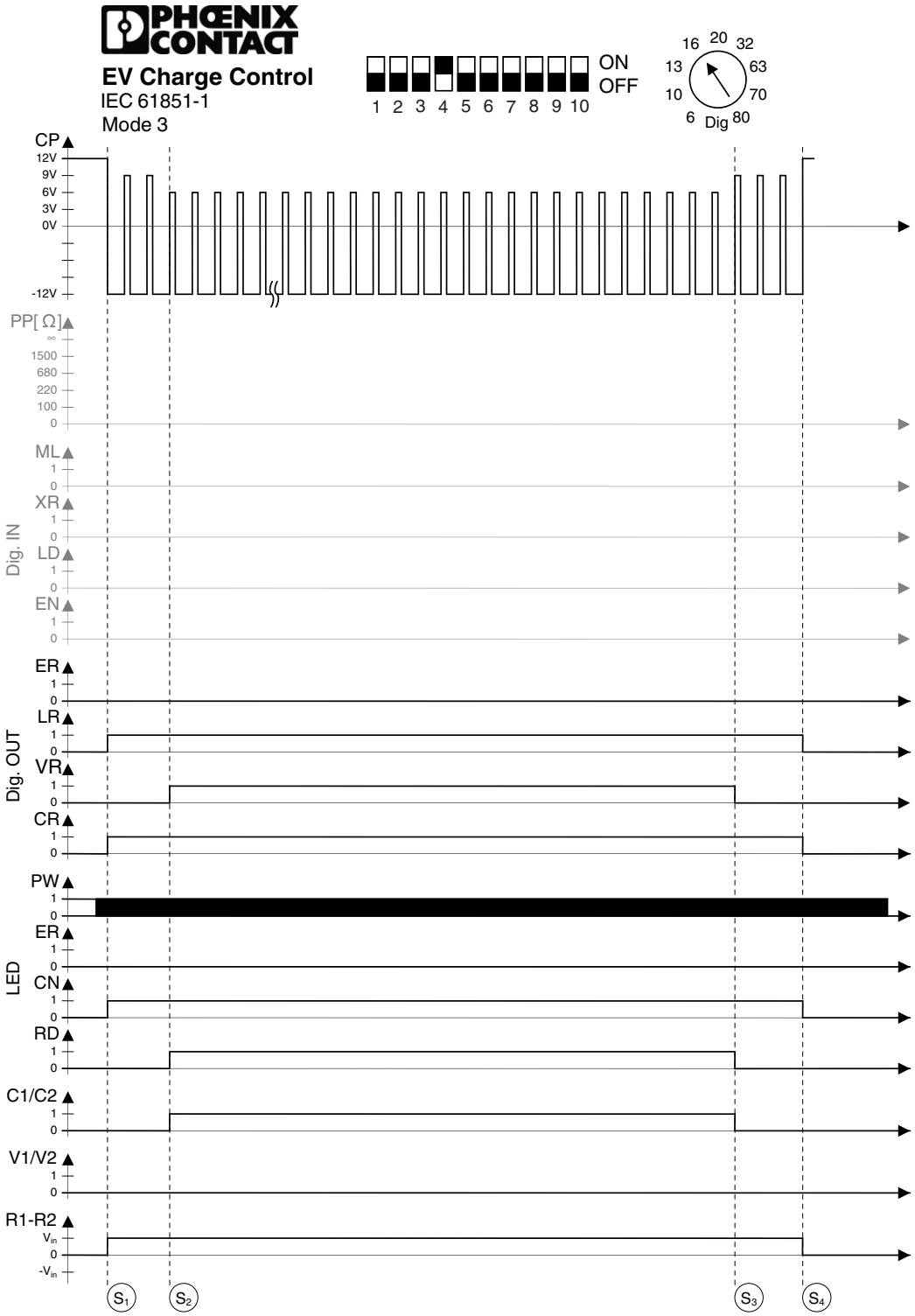


Figure 7-5 Charging sequence 5

| Vehicle status in Figure 7-5 | | Charging sequence 5 |
|---|---|---|
| **S1** | Status B | The charging plug is inserted into the charging socket on the vehicle.<br>The electric vehicle is detected by means of the CP signal (Control Pilot).<br>The voltage at CP drops to 9 V, the PWM signal indicates the maximum permissible charging current to the vehicle.<br>Digital output LR (Locking Request) is set.<br>Digital output CR (Charger Ready) is set.<br>The CN (Connect) LED is constantly lit.<br>The voltage at locking output R2-R1 is switched on. |
| **S2** | Status C | The electric vehicle switches S2 on (see “Control Pilot wiring” on page 22), the voltage at CP drops to 6 V.<br>Digital output VR (Vehicle Ready) is set.<br>The RD (Ready) LED is constantly lit.<br>Relay contacts C1 and C2 are closed. |
| **S3** | Status B | The electric vehicle aborts charging and switches S2 off.<br>The voltage at CP returns to 9 V.<br>Digital output VR (Vehicle Ready) is deleted.<br>The RD (Ready) LED is no longer lit.<br>Relay contacts C1 and C2 are opened again. |
| **S4** | Status A | The charging plug is no longer connected to the vehicle.<br>The PWM signal is switched off.<br>The voltage at CP returns to the idling value of 12 V.<br>Digital output CR is deleted.<br>The CN LED goes out.<br>The voltage at locking output R2-R1 is switched off again.<br>The device returns to the initial status. |

## 7.6 Charging sequence 6

DIP 1 = OFF **No PX request, permanently connected charging cable (case C)**

The Proximity Plug is not evaluated. The charging cable is permanently connected to the charging station.

DIP 4 = ON **Locking is executed**

DIP 5 = ON **Locking option 1**

DC motor: the locking motor is briefly switched on
Locking R1 at ≤ 24 V (R2 remains at 0 V)
Unlocking R2 at ≤ 24 V (R1 remains at 0 V)

**To lock, a positive pulse is output at locking output R2-R1. To unlock, a negative pulse is generated.**

DIP 9 = OFF **Manual locking: input ML is not evaluated**

Locking is automatic.

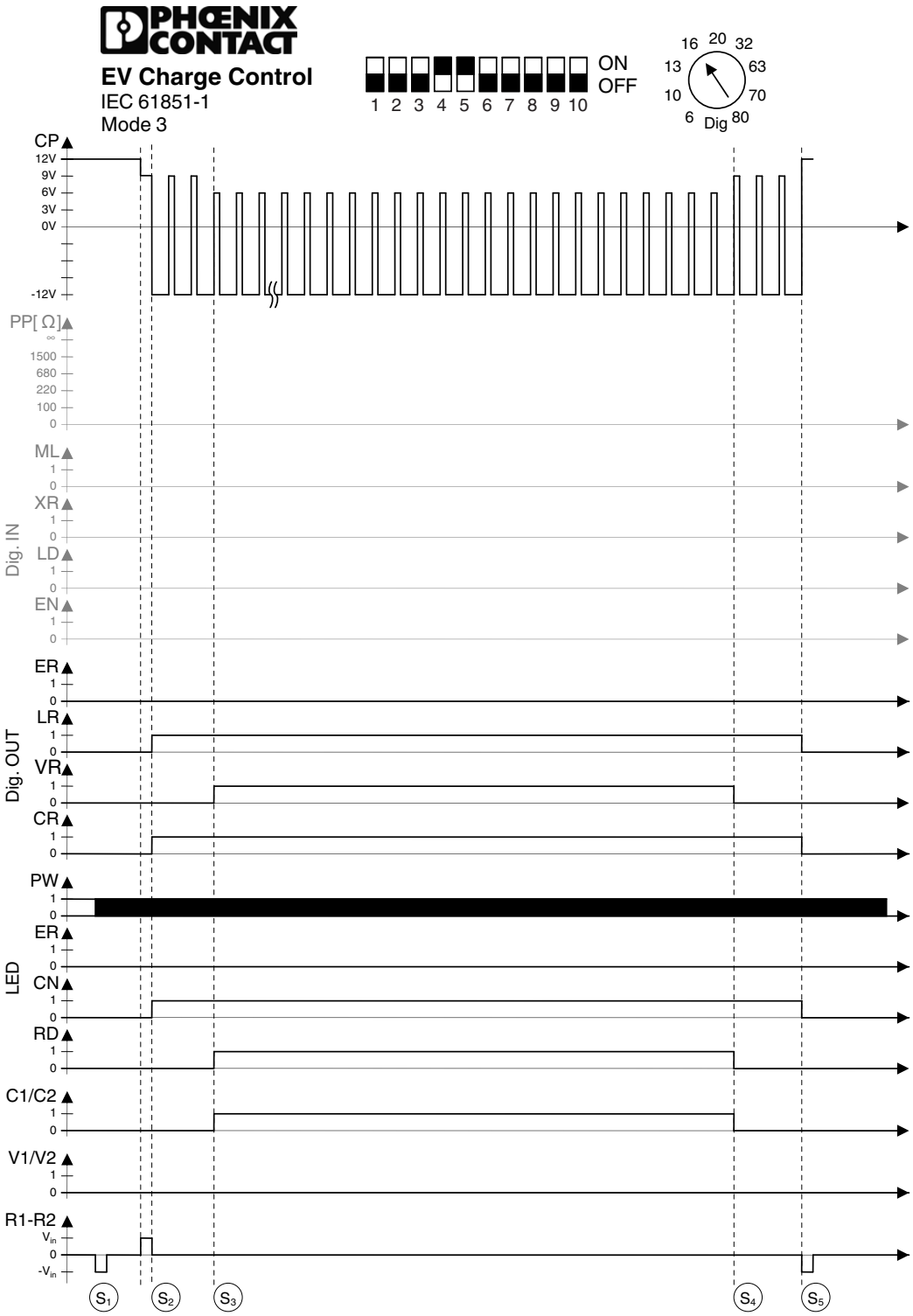


Figure 7-6 Charging sequence 6

| Vehicle status in Figure 7-6 | | Charging sequence 6 |
|---|---|---|
| **S1** | Status A | In this setting, the initialization phase includes an unlocking pulse at locking output R2-R1. |
| **S2** | Status B | The charging plug is inserted into the charging socket on the vehicle.<br>The electric vehicle is detected by means of the CP signal (Control Pilot).<br>The voltage at CP drops to 9 V.<br>A locking pulse is generated at locking output R2-R1.<br>After the locking pulse has elapsed, the PWM signal indicates the maximum permissible charging current to the vehicle.<br>Digital output LR (Locking Request) is set.<br>Digital output CR (Charger Ready) is set.<br>The CN (Connect) LED is constantly lit. |
| **S3** | Status C | The electric vehicle switches S2 on (see “Control Pilot wiring” on page 22), the voltage at CP drops to 6 V.<br>Digital output VR (Vehicle Ready) is set.<br>The RD (Ready) LED is constantly lit. Relay contacts C1 and C2 are closed. |
| **S4** | Status B | The electric vehicle aborts charging and switches S2 off.<br>The voltage at CP returns to 9 V.<br>Digital output VR (Vehicle Ready) is deleted.<br>The RD (Ready) LED is no longer lit.<br>Relay contacts C1 and C2 are opened again. |
| **S5** | Status A | The charging plug is no longer connected to the vehicle.<br>The PWM signal is switched off.<br>The voltage at CP returns to the idling value of 12 V.<br>Digital output CR is deleted.<br>The CN (Connect) LED goes out.<br>An unlocking pulse is generated at locking output R2-R1.<br>The device returns to the initial status. |

## 7.7 Charging sequence 7

DIP 1 = OFF **No PX request, permanently connected charging cable (case C)**

The Proximity Plug is not evaluated. The charging cable is permanently connected to the charging station.

DIP 4 = ON **Locking is executed**

DIP 5 = ON **Locking option 1**

DC motor: the locking motor is briefly switched on
Locking R1 at ≤ 24 V (R2 remains at 0 V)
Unlocking R2 at ≤ 24 V (R1 remains at 0 V)

To lock, a positive pulse is output at locking output R2-R1. To unlock, a negative pulse is generated.

DIP 6 = ON **Locking confirmation at input LD is evaluated**

The system is expecting locking confirmation at digital input LD.

As long as no confirmation is received regarding locking, the system continues trying to enable locking. A locking pulse is sent on each attempt. If unsuccessful, an unlocking pulse is sent and the sequence is repeated. The times for both pulses and the pause can be set via the web interface.

DIP 9 = OFF **Manual locking: input ML is not evaluated**

Locking is automatic.

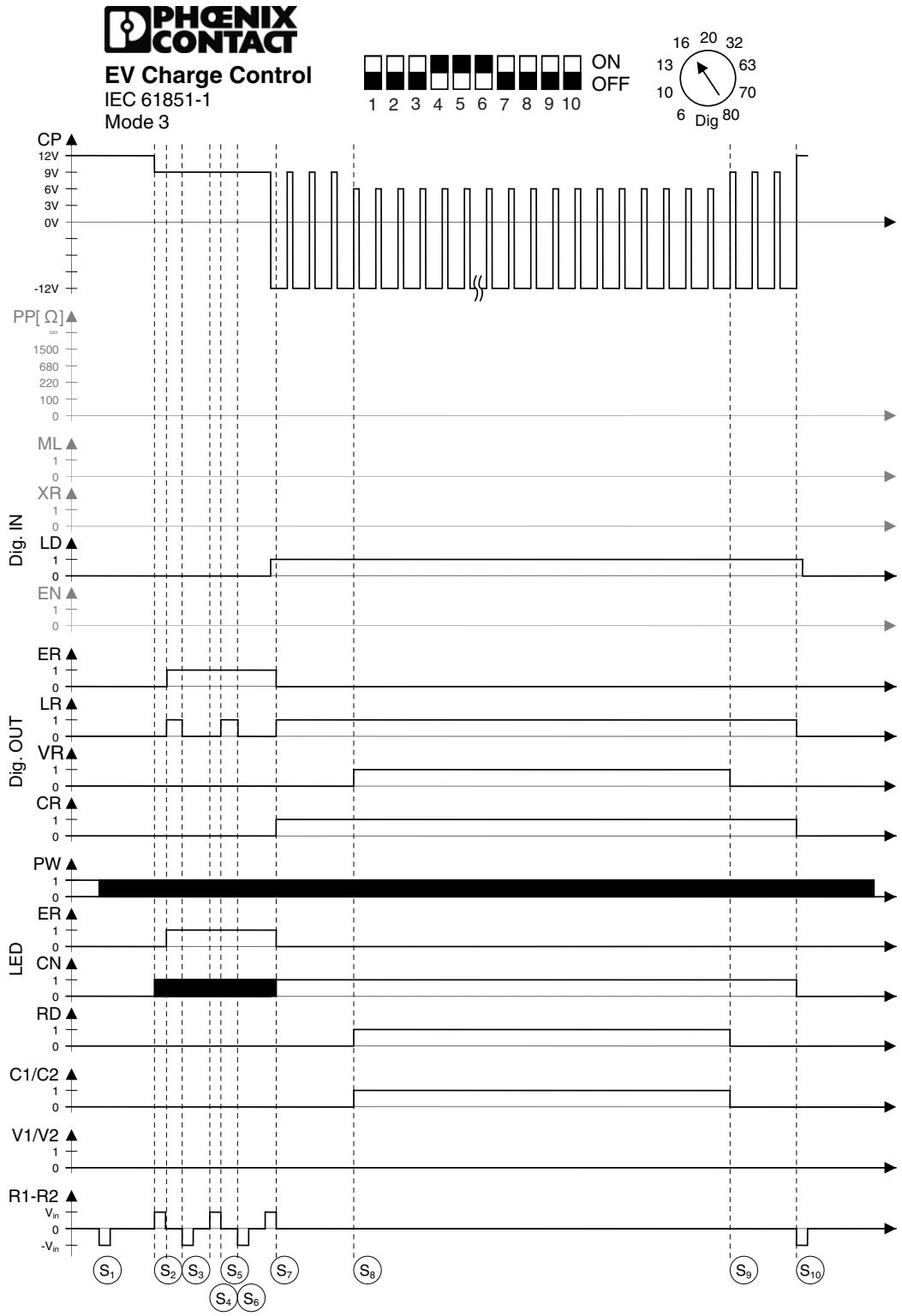


Figure 7-7 Charging sequence 7

| Vehicle status in Figure 7-7 | | Charging sequence 7 |
|---|---|---|
| **S1** | Status A | In this setting, the initialization phase includes an unlocking pulse at locking output R2-R1. |
| **S2** | Status B | The charging plug is inserted into the charging socket on the vehicle.<br>The electric vehicle is detected by means of the CP signal (Control Pilot).<br>The voltage at CP drops to 9 V.<br>A locking pulse is generated at locking output R2-R1.<br>A PWM signal is not generated because the plug is not locked.<br>The CN (Connect) LED flashes at a frequency of 2 Hz.<br>After the locking pulse has elapsed, digital output LR (Locking Request) is set.<br>Digital input LD (Lock Detection) is still at 0. An error is therefore now issued.<br>Digital output ER (Error) is set.<br>The ER (Error) LED is switched on. The status is set to E. |
| **S3** | Status E | After the waiting time has elapsed (time between locking cycles, see “Configuration tab” on page 88), an unlocking pulse is generated at locking output R2-R1.<br>Digital output LR (Locking Request) is deleted.<br>The CN (Connect) LED continues flashing. |
| **S4** | | Digital input LD (Lock Detection) is still set to 0.<br>Another locking pulse is generated.<br>The CN (Connect) LED continues flashing. |
| **S5** | | After the locking pulse has elapsed, digital output LR (Locking Request) is set again. |
| **S6** | | An unlocking pulse is generated again. |
| **S7** | Status B | During the new locking pulse, digital input LD (Lock Detection) is set to 1.<br>After the locking pulse has elapsed, digital output ER (Error) is switched off.<br>Digital output LR (Locking Request) is switched on.<br>Digital output CR (Charger Ready) is set.<br>The ER (Error) LED is switched off.<br>The CN (Connect) LED is constantly lit.<br>The PWM signal indicates the maximum permissible charging current to the vehicle. |

| Vehicle status in Figure 7-7 | | Charging sequence 7 [...] |
|---|---|---|
| **S8** | Status C | The electric vehicle switches S2 on (see “Control Pilot wiring” on page 22), the voltage at CP drops to 6 V.<br>Digital output VR (Vehicle Ready) is set.<br>The RD (Ready) LED is constantly lit.<br>Relay contacts C1 and C2 are closed. |
| **S9** | Status B | The electric vehicle aborts charging and switches S2 off.<br>The voltage at CP returns to 9 V.<br>Digital output VR (Vehicle Ready) is deleted.<br>The RD (Ready) LED is no longer lit.<br>Relay contacts C1 and C2 are opened again. |
| **S10** | Status A | The charging plug is no longer connected to the vehicle.<br>The voltage at CP returns to the idling value of 12 V.<br>Digital output LR (Locking Request) is switched off.<br>Digital output CR (Charger Ready) is deleted.<br>The CN (Connect) LED goes out.<br>An unlocking pulse is generated at locking output R2-R1.<br>Digital input LD (Lock Detection) is reset to zero.<br>The device returns to the initial status.<br>If the locking confirmation does not work correctly here and digital input LD (Lock Detection) is not reset to zero, the unlocking and locking cycles are repeated here as well. |

## 7.8 Charging sequence 8

DIP 1 = OFF **No PX request, permanently connected charging cable (case C)**

The Proximity Plug is not evaluated. The charging cable is permanently connected to the charging station.

DIP 4 = ON **Locking is executed**

DIP 5 = OFF **Locking option 0**

- Lifting solenoid
- R1-R3 is controlled (R1 at ≤ 24 V) for as long as locking is required
- R2-R4 remains in the initial status (R2 at 0 V) the entire time

During locking, the locking output is constantly supplied with power, which means that the lifting solenoid is permanently picked up.

DIP 7 = ON **Enable charging process: input EN is evaluated**

The charging process is enabled via digital input EN (Enable).

DIP 9 = OFF **Manual locking: input ML is not evaluated**

Locking is automatic.

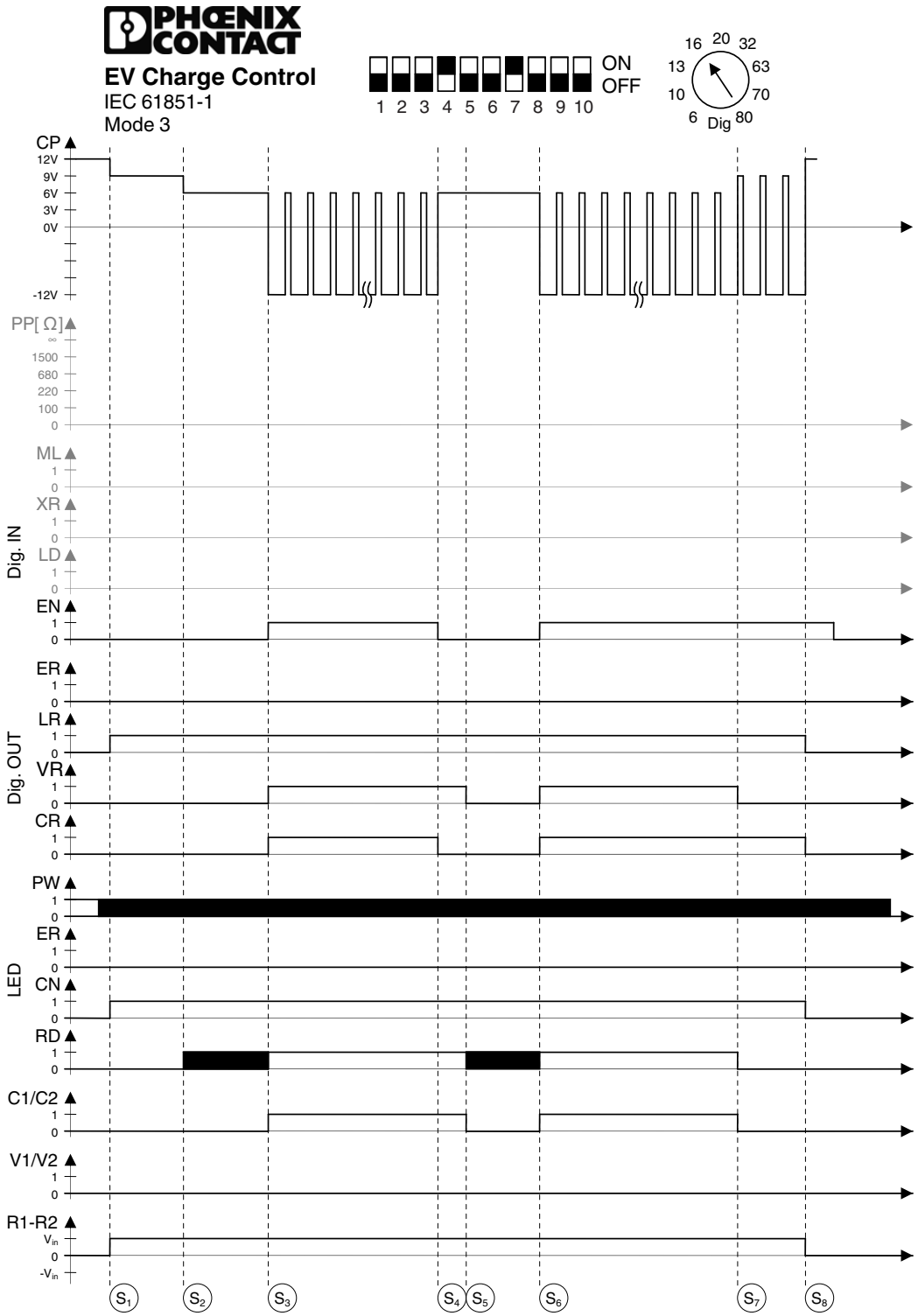


Figure 7-8 Charging sequence 8

| Vehicle status in Figure 7-8 | | Charging sequence 8 |
|---|---|---|
| **S1** | Status B | The charging plug is inserted into the charging socket on the vehicle.<br>The electric vehicle is detected by means of the CP signal (Control Pilot).<br>The voltage at CP drops to 9 V.<br>A PWM signal is not generated because digital input EN (Enable) is still at 0.<br>Digital output LR (Locking Request) is set.<br>The CN (Connect) LED is constantly lit.<br>The voltage at locking output R2-R1 is switched on. |
| **S2** | Status C | The electric vehicle switches S2 on (see “Control Pilot wiring” on page 22), the voltage at CP drops to 6 V.<br>The RD (Ready) LED flashes at a frequency of 2 Hz. |
| **S3** | | Digital input EN (Enable) is set to 1 by a switch or an external controller.<br>Digital output VR (Vehicle Ready) is set.<br>Digital output CR (Charger Ready) is set.<br>The RD (Ready) LED is constantly lit.<br>The PWM signal indicates the maximum permissible charging current to the vehicle.<br>Relay contacts C1 and C2 are switched on. |
| **S4** | | Digital input EN (Enable) is switched off again.<br>Digital output CR (Charger Ready) is switched off again.<br>The PWM signal is switched off. |
| **S5** | | After a maximum waiting time of 3 s (specified internally), relay contacts C1 and C2 are opened again.<br>Digital output VR (Vehicle Ready) is reset again.<br>The RD (Ready) LED flashes again. |
| **S6** | | Digital input EN (Enable) is switched on again.<br>The PWM signal indicates the maximum permissible charging current to the vehicle again.<br>Digital output VR (Vehicle Ready) is switched on again.<br>Digital output CR (Charger Ready) is switched on again.<br>The RD (Ready) LED is constantly lit again.<br>Relay contacts C1 and C2 are closed again. |
| **S7** | Status B | The electric vehicle aborts charging and switches S2 off.<br>The voltage at CP returns to 9 V.<br>Digital output VR (Vehicle Ready) is deleted.<br>The RD (Ready) LED is no longer lit.<br>Relay contacts C1 and C2 are opened again. |
| **S8** | Status A | The charging plug is no longer connected to the vehicle.<br>The PWM signal is switched off.<br>The voltage at CP returns to the idling value of 12 V.<br>Digital output LR (Locking Request) is deleted.<br>Digital output CR (Charger Ready) is deleted.<br>The CN (Connect) LED goes out.<br>The voltage at locking output R2-R1 is switched off again.<br>The device returns to the initial status. |

## 7.9 Charging sequence 9

DIP 1 = OFF **No PX request, permanently connected charging cable (case C)**

The Proximity Plug is not evaluated. The charging cable is permanently connected to the charging station.

DIP 4 = ON **Locking is executed**

DIP 5 = OFF **Locking option 0**

- Lifting solenoid
- R1-R3 is controlled (R1 at ≤ 24 V) for as long as locking is required
- R2-R4 remains in the initial status (R2 at 0 V) the entire time

During locking, the locking output is constantly supplied with power, which means that the lifting solenoid is permanently picked up.

DIP 8 = ON **Charging station availability: input XR is evaluated**

The availability of the device is controlled via digital input XR (External Release).

DIP 9 = OFF **Manual locking: input ML is not evaluated**

Locking is automatic.

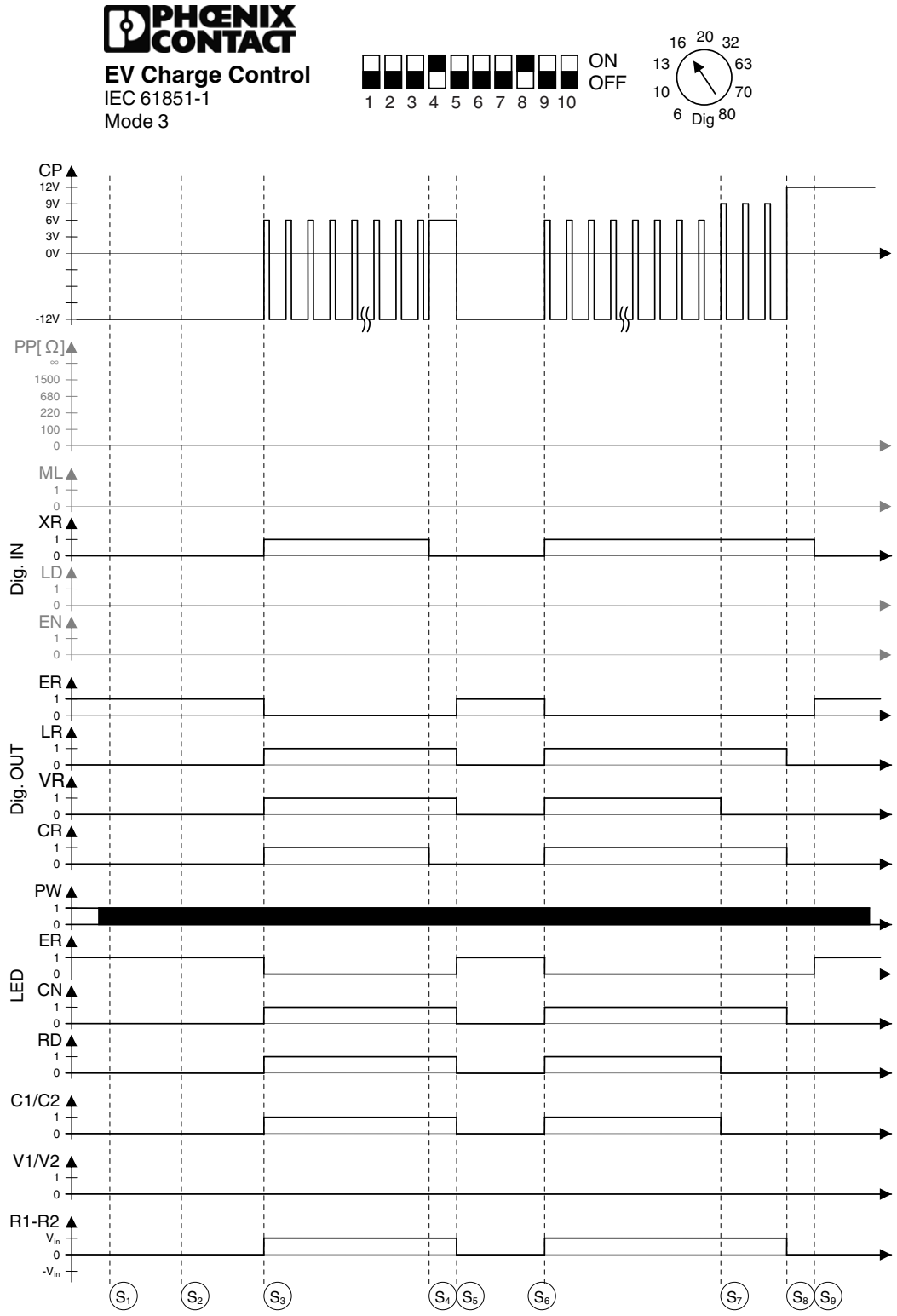


Figure 7-9 Charging sequence 9

| Vehicle status in Figure 7-9 | | Charging sequence 9 |
|---|---|---|
| **S1** | Status F | The charging plug is inserted into the charging socket on the vehicle.<br>The voltage at CP is set to -12 V because digital input XR (External Release) is not set by a switch or an external controller.<br>A PWM signal is not generated.<br>Digital output ER (Error) is set. The ER (ERROR) LED lights up. |
| **S2** | | The electric vehicle switches S2 on (see “Control Pilot wiring” on page 22). |
| **S3** | Status C | Digital input XR (External Release) was set to 1.<br>Digital output ER (Error) is reset. Digital output LR (Locking Request) is set.<br>Digital output VR (Vehicle Ready) is set.<br>Digital output CR (Charger Ready) is set.<br>The ER (ERROR) LED is switched off.<br>The CN (CONNECT) LED is switched on.<br>The RD (READY) LED is switched on.<br>The PWM signal indicates the maximum permissible charging current to the vehicle.<br>Relay contacts C1 and C2 are switched on.<br>The locking voltage at locking output R2-R1 is switched on. |
| **S4** | | Digital input XR (External Release) was deleted.<br>The PWM signal at the CP signal is switched off.<br>Digital output CR (Charger Ready) is switched off again. |
| **S5** | Status F | After a maximum waiting time of 3 s (specified internally), the CP signal is set to -12 V.<br>Digital output ER (Error) is set.<br>Digital output LR (Locking Request) is deleted.<br>Digital output VR (Vehicle Ready) is deleted.<br>The ER (ERROR) LED is switched on.<br>The CN (CONNECT) LED is switched off.<br>The RD (READY) LED is switched off.<br>Relay contacts C1 and C2 are switched off.<br>The locking voltage at locking output R2-R1 is switched off. |
| **S6** | Status C | Digital input XR (External Release) was reset to 1.<br>Digital output ER (Error) is deleted.<br>Digital output LR (Locking Request) is set.<br>Digital output VR (Vehicle Ready) is set.<br>Digital output CR (Charger Ready) is set.<br>The ER (ERROR) LED is switched off.<br>The CN (CONNECT) LED is switched on.<br>The RD (READY) LED is switched on.<br>The PWM signal indicates the maximum permissible charging current to the vehicle.<br>Relay contacts C1 and C2 are switched on.<br>The locking voltage at locking output R2-R1 is switched on. |

| Vehicle status in Figure 7-9 | | Charging sequence 9 [...] |
|---|---|---|
| **S7** | Status B | The electric vehicle aborts charging and switches S2 off.<br>The voltage at CP returns to 9 V.<br>Digital output VR (Vehicle Ready) is deleted.<br>The RD (READY) LED is no longer lit.<br>Relay contacts C1 and C2 are opened again. |
| **S8** | Status A | The charging plug is no longer connected to the vehicle.<br>The PWM signal is switched off.<br>The voltage at CP returns to the idling value of 12 V.<br>Digital output LR (Locking Request) is deleted.<br>Digital output CR (Charger Ready) is deleted.<br>The CN (CONNECT) LED goes out.<br>The voltage at locking output R2-R1 is switched off again.<br>The device returns to the initial status. |
| **S9** | Status F | The voltage at CP is set to -12 V because digital input XR (External Release) is deleted by a switch or an external controller.<br>Digital output ER (Error) is set.<br>The ER (ERROR) LED lights up. |

## 7.10 Charging sequence 10

DIP 1 = OFF **No PX request, permanently connected charging cable (case C)**

The Proximity Plug is not evaluated. The charging cable is permanently connected to the charging station.

DIP 4 = ON **Locking is executed**

DIP 5 = OFF **Locking option 0**

- Lifting solenoid
- R1-R3 is controlled (R1 at ≤ 24 V) for as long as locking is required
- R2-R4 remains in the initial status (R2 at 0 V) the entire time

During locking, the locking output is constantly supplied with power, which means that the lifting solenoid is permanently picked up.

DIP 7 = ON **Enable charging process: input EN is evaluated**

The charging process is enabled via digital input EN (Enable).

DIP 9 = OFF **Manual locking: input ML is evaluated**

Input ML is configured on the controller via pulses using the web interface. Locking is switched on/off with every pulse at digital input ML. The pulse must be at least 200 ms long.

DIP 10 = ON **Enable bit in Modbus register is evaluated**

The charging process is enabled with register address 400 via Ethernet access with Modbus TCP or via the web interface. Both enabling options (input EN and address 400) are ORed.

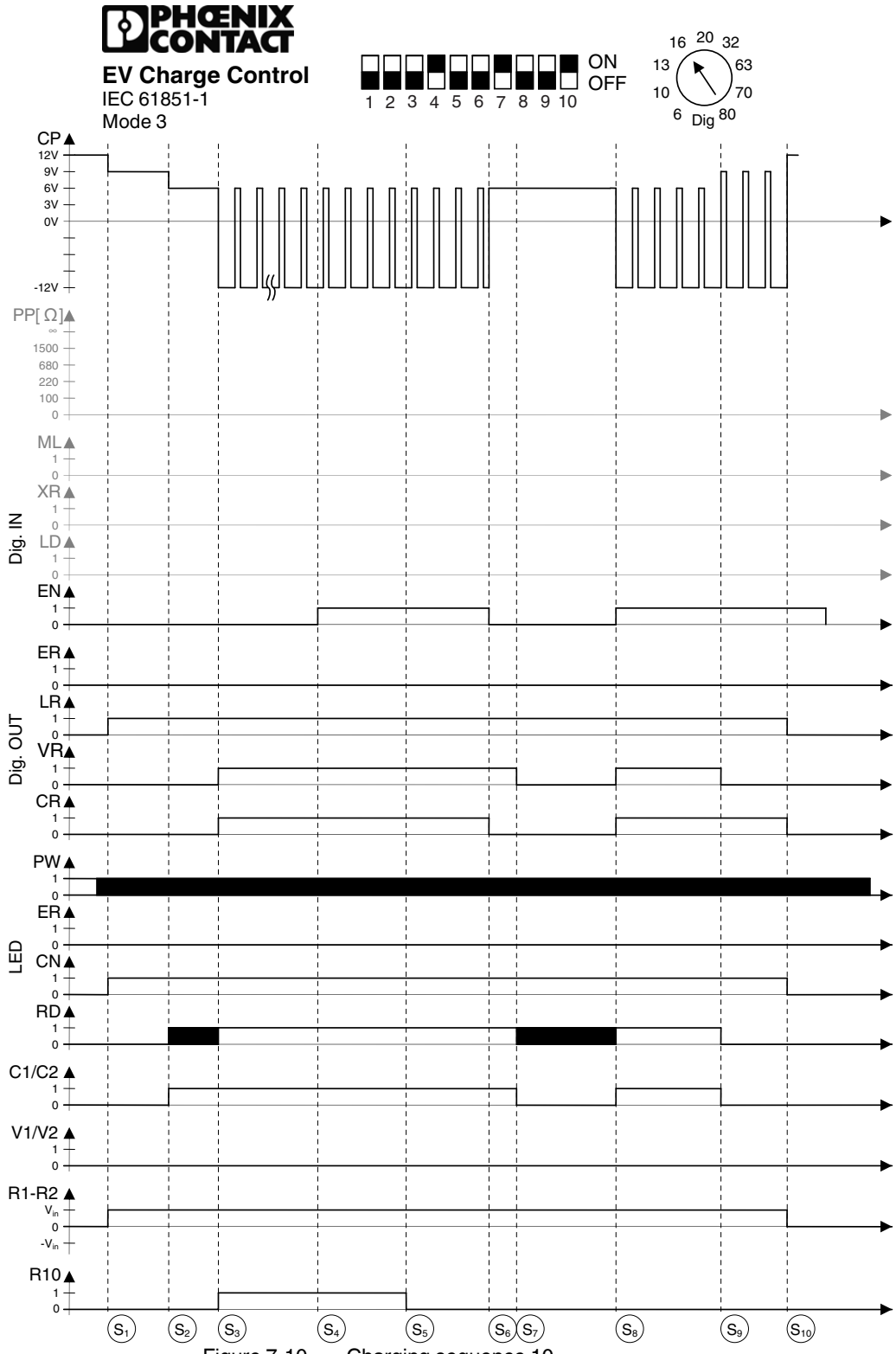


Figure 7-10 Charging sequence 10

| Vehicle status in Figure 7-10 | | Charging sequence 10 |
|---|---|---|
| **S1** | Status B | The charging plug is inserted into the charging socket on the vehicle.<br>The electric vehicle is detected by means of the CP signal (Control Pilot).<br>The voltage at CP drops to 9 V.<br>A PWM signal is not generated because digital input EN (Enable) and register address 400 are still at 0.<br>Digital output LR (Locking Request) is set.<br>The CN (Connect) LED is constantly lit.<br>The voltage at locking output R2-R1 is switched on. |
| **S2** | Status C | The electric vehicle switches S2 on (see “Control Pilot wiring” on page 22), the voltage at CP drops to 6 V.<br>The RD (Ready) LED flashes at a frequency of 2 Hz. |
| **S3** | | Register address 400 is set to 1 by means of write access.<br>Digital output VR (Vehicle Ready) is set.<br>Digital output CR (Charger Ready) is set.<br>The RD (Ready) LED is constantly lit.<br>The PWM signal indicates the maximum permissible charging current to the vehicle.<br>Relay contacts C1 and C2 are switched on. |
| **S4** | | Digital input EN (Enable) is set to 1 by a switch or an external controller.<br>No changes are made due to ORing. |
| **S5** | | Register address 400 is set to 0 by means of write access.<br>No changes are made due to ORing. |
| **S6** | | Digital input EN (Enable) is switched off again.<br>Digital output CR (Charger Ready) is switched off again. |
| **S7** | | After a maximum waiting time of 3 s (specified internally), relay contacts C1 and C2 are opened again.<br>Digital output VR (Vehicle Ready) is reset again.<br>The RD (Ready) LED flashes again. |
| **S8** | | Digital input EN (Enable) is switched on again.<br>The PWM signal indicates the maximum permissible charging current to the vehicle again.<br>Digital output VR (Vehicle Ready) is switched on again.<br>Digital output CR (Charger Ready) is switched on again.<br>The RD (Ready) LED is constantly lit again.<br>Relay contacts C1 and C2 are closed again. |
| **S9** | Status B | The electric vehicle aborts charging and switches S2 off.<br>The voltage at CP returns to 9 V.<br>Digital output VR (Vehicle Ready) is deleted.<br>The RD (Ready) LED is no longer lit.<br>Relay contacts C1 and C2 are opened again. |
| **S10** | Status A | The charging plug is no longer connected to the vehicle.<br>The PWM signal is switched off.<br>The voltage at CP returns to the idling value of 12 V.<br>Digital output LR (Locking Request) is deleted.<br>Digital output CR (Charger Ready) is deleted.<br>The CN (Connect) LED goes out.<br>The voltage at locking output R2-R1 is switched off again.<br>The device returns to the initial status. |

## 7.11 Charging sequence 11

DIP 1 = ON **PX request, charging cable with plug on the charger (case B)**

The current carrying capacity of the cable and the plugs is determined via the Proximity Plug and the appropriate resistance circuit in the plug (see “Proximity Plug wiring” on page 21).

If the PRESET CHARGE CURRENT rotary switch is set to a higher current than the Proximity Plug is able to detect, the proximity value limits the current so that the cable or the plugs cannot be overloaded.

DIP 2 = ON **Plug/cable with low current carrying capacity is rejected**

For values below the limit values, an error is issued and charging cannot be started.

DIP 3 = ON **13 A plug/cable is rejected**

Plugs or cables with a current carrying capacity below 32 A are rejected (13 A and 20 A).

DIP 3 = OFF **13 A and 20 A plug/cable is rejected**

Plugs or cables with a current carrying capacity below 20 A are rejected (13 A).

DIP 4 = ON **Locking is executed**

DIP 5 = ON **Locking option 1**

DC motor: the locking motor is briefly switched on
Locking R1 at ≤ 24 V (R2 remains at 0 V)
Unlocking R2 at ≤ 24 V (R1 remains at 0 V)

To lock, a positive pulse is output at locking output R2-R1. To unlock, a negative pulse is generated.

DIP 6 = ON **Locking confirmation at input LD is evaluated**

The system is expecting locking confirmation at digital input LD.

As long as no confirmation is received regarding locking, the system continues trying to enable locking. A locking pulse is sent on each attempt. If unsuccessful, an unlocking pulse is sent and the sequence is repeated. The times for both pulses and the pause can be set via the web interface.

DIP 7 = ON **Enable charging process: input EN is evaluated**

The charging process is enabled via digital input EN (Enable).

DIP 8 = ON **Charging station availability: input XR is evaluated**

The availability of the device is controlled via digital input XR (External Release).

DIP 9 = ON **Manual locking: input ML is evaluated**

Input ML is configured on the controller via pulses using the web interface. Locking is switched on/off with every pulse at digital input ML. The pulse must be at least 200 ms long.

DIP 10 = ON **Enable bit in Modbus register is evaluated**

The charging process is enabled with register address 400 via Ethernet access with Modbus TCP or via the web interface. Both enabling options (input EN and address 400) are ORed.

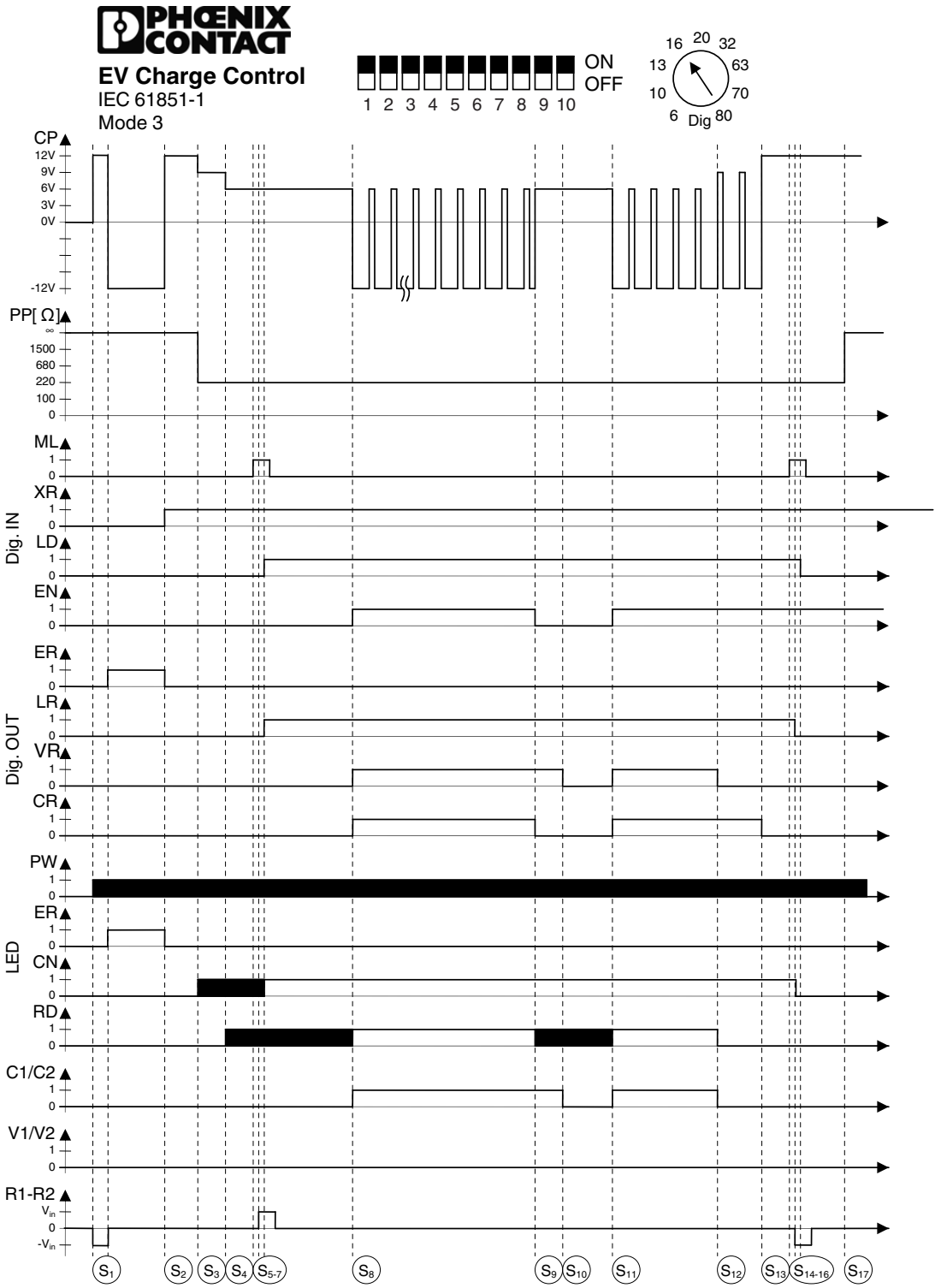


Figure 7-11 Charging sequence 11

| Vehicle status in Figure 7-11 | | Charging sequence 11 |
|---|---|---|
| **S1** | Status F | Following the initialization phase, the voltage at CP is set to -12 V because digital input XR (External Release) is not set by a switch or an external controller.<br>A PWM signal is not generated.<br>Digital output ER (Error) is set.<br>The ER (ERROR) LED lights up. |
| **S2** | Status A | Digital input XR (External Release) was set to 1.<br>Digital output ER (Error) is reset.<br>The ER (ERROR) LED is switched off. |
| **S3** | Status B | The charging cable is connected to the charging station.<br>Input PX (Proximity Plug) detects a resistance value of 220 ohms, which represents a current carrying capacity of 32 A.<br>The charging plug is inserted into the charging socket on the vehicle. The electric vehicle is detected by means of the CP signal (Control Pilot).<br>The voltage at CP drops to 9 V, a PWM signal is not generated because the plug is not locked.<br>The CN (CONNECT) LED flashes at a frequency of 2 Hz. |
| **S4** | Status C | The electric vehicle switches S2 on, the voltage at CP drops to 6 V.<br>The RD (READY) LED flashes at a frequency of 2 Hz. |
| **S5** | | A 0 is generated at digital input ML (Manual Lock) by a button or an external controller. |
| **S6** | | The locking pulse is issued at locking output R2-R1. |
| **S7** | | The locking mechanism indicates correct locking via digital input LD (Lock Detection).<br>Digital output LR (Locking Request) is switched on. The CN (Connect) LED is constantly lit. |
| **S8** | | Digital input EN (Enable) is set to 1 by a switch or an external controller.<br>The PWM signal indicates the maximum permissible charging current to the vehicle.<br>Digital output VR (Vehicle Ready) is set.<br>Digital output CR (Charger Ready) is set.<br>The RD (READY) LED is constantly lit.<br>Relay contacts C1 and C2 are switched on. |
| **S9** | | Digital input EN (Enable) is switched off again.<br>Digital output CR (Charger Ready) is switched off again.<br>The PWM signal is switched off. |
| **S10** | | After a maximum waiting time of 3 s (specified internally), relay contacts C1 and C2 are opened again.<br>Digital output VR (Vehicle Ready) is reset again.<br>The RD (READY) LED flashes again. |
| **S11** | | Digital input EN (Enable) is switched on again.<br>The PWM signal indicates the maximum permissible charging current to the vehicle again.<br>Digital output VR (Vehicle Ready) is switched on again.<br>Digital output CR (Charger Ready) is switched on again.<br>The RD (READY) LED is constantly lit again.<br>Relay contacts C1 and C2 are closed again. |

| Vehicle status in Figure 7-11 | | Charging sequence 11 [...] |
|---|---|---|
| **S12** | Status B | The electric vehicle aborts charging and switches S2 off.<br>The voltage at CP returns to 9 V.<br>Digital output VR (Vehicle Ready) is deleted.<br>The RD (READY) LED is no longer lit.<br>Relay contacts C1 and C2 are opened again. |
| **S13** | Status A | The charging plug is no longer connected to the vehicle.<br>The PWM signal is switched off.<br>The voltage at CP returns to the idling value of 12 V.<br>Digital output LR (Locking Request) is deleted.<br>Digital output CR (Charger Ready) is deleted. |
| **S14** | | A pulse is generated at digital input ML (Manual Lock) by a button or an external controller. |
| **S15** | | The unlocking pulse is issued at locking output R2-R1.<br>Digital output LR (Locking Request) is switched off.<br>The CN (CONNECT) LED is switched off. |
| **S16** | | The locking mechanism indicates the absence of locking via digital input LD (Lock Detection). |
| **S17** | | The charging cable is removed from the charging station.<br>Input PX (Proximity Plug) detects an open input. |

# 8 Configuration via web interface

## 8.1 Connecting to the device

- Connect the charging controller to a PC on which a browser is installed via the Ethernet connection.

  The following are examples of browsers that you can use:

  – Mozilla Firefox 17.0 or later

The software is pre-installed.

IP address 192.168.0.8 is set by default upon delivery of the system.

However, the IP address can also be assigned via DHCP (see “Network tab” on page 91). If a DHCP server is found with this setting, the system can be found in two ways:

– Using the MAC address specified on the rating plate
– If a DNS server is available, the system can be addressed using the device name. The preset device name is EVCC_1.

The system can be reached using the preset IP address if the following settings have been made on your computer (example procedure for **Windows 7**):

**Setting up the IP address**

1. In your system select “Network and Sharing Center” under “Start, Control Panel, Network and Internet”.
2. From the connections available, select the one that is connected to the EV Charge Control charging controller.
3. Click on “Properties”.
4. Select “Internet Protocol Version 4 (TCP/IPv4)” and click on “Properties”.
5. Here you can assign a suitable IP address to your computer, enabling you to use it to establish a direct connection to the charging controller.
6. You can now access and configure the system via your browser.

   To do this, enter http://192.168.0.8 in the address line of your browser.
7. Depending on the setup and network, in the address line of your browser you can also enter the device name or another IP address you have set via the browser.

## 8.2 Status tab

In order to safely transmit the changes, you must click on the “submit” button within the polling cycle (10 seconds). Otherwise, the original values will be restored.

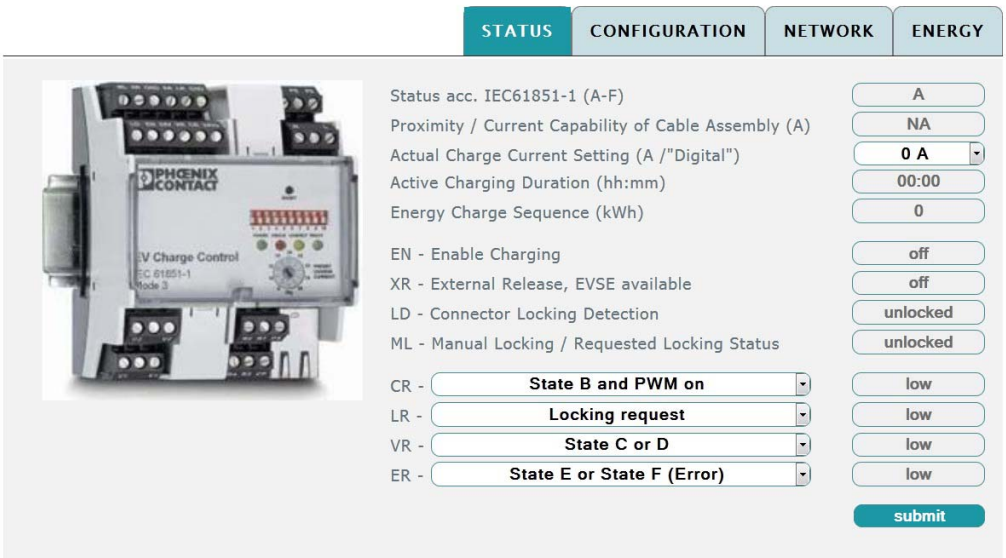


Figure 8-1 “Status” web interface

Table 8-1 “Status” tab

| Parameter | Description |
|---|---|
| **Status acc. IEC 61851 (A-F)** | Current status of the vehicle. “A” to “F” is possible. |
| **Proximity / Current Capability of Cable Assembly (A)** | Displays the current carrying capacity of the plug and cable determined by means of the PX signal (Proximity Plug).<br>If DIP 1 is set to OFF, “NA” appears in this field because the value cannot be determined. |
| **Actual Charge Current Setting (A / “Digital”)** | Represents the actual permissible charging current that is set and determined by the device.<br>The permissible current values can be set via the selection box. The current values that are offered can be reduced using the PRESET CHARGE CURRENT rotary switch, the Proximity Plug or simplified mode. Any changes must be confirmed by clicking on the “submit” button. |
| **Active Charging Duration (hh:mm)** | Displays the charging time for the current charging process.<br>The value is reset again at the start of each charging process. |
| **Energy Charge Sequence (kWh)** | Displays the charged power of the current charging process. The value is reset again at the start of each charging process. This display is only visible if a power meter is connected. |

Table 8-1 “Status” tab [...]

| Parameter | | Description |
|---|---|---|
| **EN** | **Enable Charging** | Displays the status of digital input EN.<br>– “on” stands for logic 1 or 24 V at the input<br>– “off” stands for logic 0 or 0 V at the input |
| **XR** | **External Release, EVSE available** | Displays the status of digital input XR.<br>– “on” stands for logic 1 or 24 V at the input<br>– “off” stands for logic 0 or 0 V at the input |
| **LD** | **Connector Locking Detection** | Displays the status of digital input LD.<br>– “locked” stands for logic 1 or 24 V at the input<br>– “unlocked” stands for logic 0 or 0 V at the input |
| **ML** | **Manual Locking / Requested Locking Status** | Displays the status of digital input ML.<br>– “locked” stands for logic 1 or 24 V at the input<br>– “unlocked” stands for logic 0 or 0 V at the input |
| **CR** | | Displays the status of digital output CR.<br>– “high” stands for logic 1 at the output<br>– “low” stands for logic 0 or 0 V at the output<br>The assignment of the outputs to the signals that are to be output can be programmed via the pull-down menu. The default value is “PWM on”. |
| **LR** | | Displays the status of digital output LR.<br>– “high” stands for logic 1 at the output<br>– “low” stands for logic 0 or 0 V at the output<br>The assignment of the outputs to the signals that are to be output can be programmed via the pull-down menu. The default value is “Locking request”. |
| **VR** | | Displays the status of digital output VR.<br>– “high” stands for logic 1 at the output<br>– “low” stands for logic 0 or 0 V at the output<br>The assignment of the outputs to the signals that are to be output can be programmed via the pull-down menu. The default value is “State C or D”. |
| **ER** | | Displays the status of digital output ER.<br>– “high” stands for logic 1 at the output<br>– “low” stands for logic 0 or 0 V at the output<br>The assignment of the outputs to the signals that are to be output can be programmed via the pull-down menu. The default value is “State E or State F (Error)”. |
| **Button** | | |
| **submit** | | The modified configuration data is transmitted to the charging controller using this button, otherwise the changes to the settings are not applied. |

The following options can be set for the outputs using the pull-down menu.

Table 8-2 “Status” tab, options for outputs CR, LR, VR, and ER

| Display in pull-down menu | Output High | Output Low | Default |
|---|---|---|---|
| **State A** | Device in status A | Device in status B - F | |
| **State B** | Device in status B | Device in status A or C - F | |
| **State B and PWM on** | Device in status B and PWM ON | Device in status A, C - F or PWM OFF | |
| **State B and PWM off** | Device in status B and PWM OFF | Device in status A, C - F or PWM ON | |
| **State C** | Device in status C | Device in status A - B or D - F | |
| **State D** | Device in status D | Device in status A - C or E - F | |
| **State E** | Device in status E | Device in status A - D or F | |
| **State F** | Device in status F | Device in status A - E | |
| **State A or State B** | Device in status A or B | Device in status C - F | |
| **State A or State B and PWM on** | Device in status A or B and PWM ON | Device in status C - F or B and PWM OFF | |
| **State A or State B and PWM off** | Device in status A or B and PWM OFF | Device in status C - F or B and PWM ON | |
| **State A or State B or State C** | Device in status A - C | Device in status D - F | |
| **State A or State B or State D** | Device in status A - B or D | Device in status C or E - F | |
| **State A or State B or State C or State D** | Device in status A - D | Device in status E - F | |
| **State E or State F (Error)** | Device in status E - F | Device in status A - D | Default for ER |
| **State C or D** | Device in status C or D | Device in status A, B, E, F | Default for VR |
| **PWM on** | Device PWM ON | Device in status A, PWM OFF, E, F | Default for CR |
| **Valid Proximity Plug** | Valid PX value detected | Invalid PX value detected | |
| **Invalid Proximity Plug** | Invalid PX value detected | Valid PX value detected | |
| **13 A at Proximity Plug** | 13 A plug detected at PX | OFF for all other values | |
| **20 A at Proximity Plug** | 20 A plug detected at PX | OFF for all other values | |
| **32 A at Proximity Plug** | 32 A plug detected at PX | OFF for all other values | |
| **63 A at Proximity Plug** | 63 A plug detected at PX | OFF for all other values | |
| **13 A or 20 A at Proximity Plug** | 13 A or 20 A plug detected at PX | OFF for all other values | |
| **13 A or 20 A or 32 A at Proximity Plug** | 13 A or 20 A or 32 A plug detected at PX | OFF for all other values | |
| **Rejected plug with low current carrying capacity** | Device rejects EV charging because current carrying capacity of charging cable is too low | OFF for all other PP values | |
| **Contactor C1C2 on** | Device switches the “charging contactor” relay ON | Otherwise OFF | |

Table 8-2 “Status” tab, options for outputs CR, LR, VR, and ER **[...]**

| Display in pull-down menu | Output High | Output Low | Default |
|---|---|---|---|
| **Ventilation V1V2 on** | Device switches the “ventilator” relay ON | Otherwise OFF | |
| **Locking request** | Locking is active | Locking is not active | Default for LR |
| **Register Output1** | The “Output1” register has been set via Modbus (logic 1) | The “Output1” register has been deleted via Modbus | |
| **Register Output2** | The “Output2” register has been set via Modbus (logic 1) | The “Output2” register has been deleted via Modbus | |
| **Register Output3** | The “Output3” register has been set via Modbus (logic 1) | The “Output3” register has been deleted via Modbus | |
| **Register Output4** | The “Output4” register has been set via Modbus (logic 1) | The “Output4” register has been deleted via Modbus | |
| **Overcurrent Detection** | A vehicle has been charged with a higher current than specified by the PWM signal | The specifications of the PWM signal have been observed by the vehicle | |
| **State A/B Voltage Detection** | In status A or B, a connected energy meter still measured a voltage > 200 V after switch off | In status A and B, a connected energy meter did not measure a voltage > 200 V after switch off | |
| **Contactor Monitoring** | The contactor monitoring has detected a status that could lead to live voltage at the charging station, even with the charging station in the off state. | The contactor monitoring has not detected any statuses out of the ordinary. | |
| **State D rejected** | A vehicle that charges in status D has been detected and rejected | No vehicle that charges in status D detected | |
| **State B or State C or State D** | A vehicle is connected to the charging station. | No vehicle is connected to the charging station or there is an error (status A, E, or F). | |

## 8.3 Configuration tab

In order to safely transmit the changes, you must click on the “submit” button within the polling cycle (10 seconds). Otherwise, the original values will be restored.

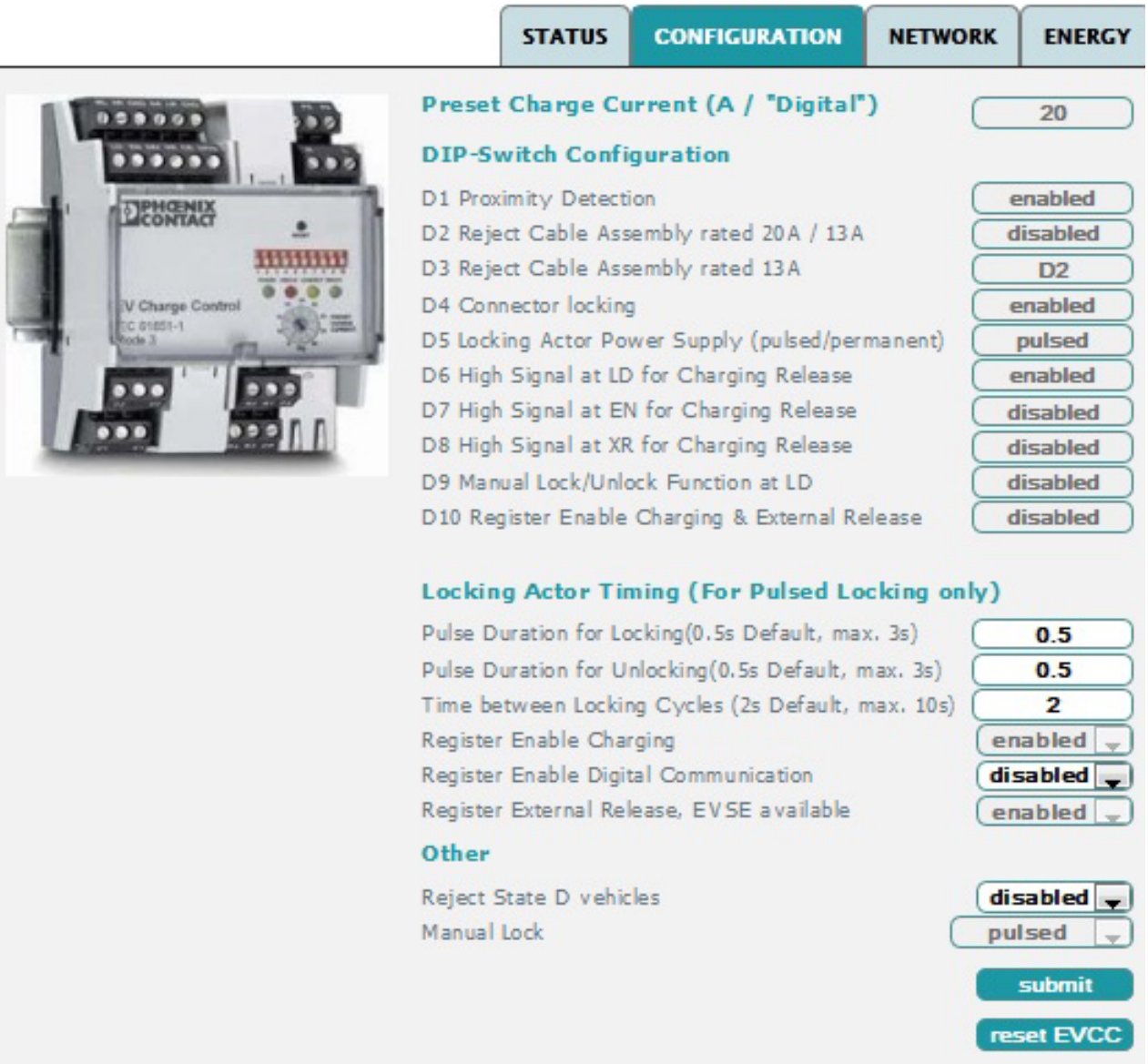


Figure 8-2 “Configuration” web interface

Table 8-3 “Configuration” tab

| Parameter | | Description |
|---|---|---|
| **Preset Charge Current (A / “Digital”)** | | The maximum permissible charging current is displayed here, which is set via the PRESET CHARGE CURRENT rotary switch on the front of the device. |
| **DIP-Switch Configuration** | | The device settings are displayed here as they are set on the front of the device using the DIP switches (see item 19 in “Function elements” on page 11). |
| **D1** | **Proximity Detection** | Select Proximity Plug request |
| **D2** | **Reject Cable Assembly rated 20A / 13A** | ≤ 20 A or ≤ 13 A current carrying capacity selection (only when DIP 1 is set to ON) |
| **D3** | **Reject Cable Assembly rated 13A** | ≤ 13 A current carrying capacity selection (only when DIP 1 is set to ON) |
| **D4** | **Connector locking** | Select locking function |
| **D5** | **Locking Actor Power Supply (pulsed/permanent)** | Select locking option (only when DIP 4 is set to ON) |
| **D6** | **High Signal at LD for Charging Release** | Locking confirmation (only when DIP 4 is set to ON) |
| **D7** | **High Signal at EN for Charging Release** | Select enabling function for charging process |
| **D8** | **High Signal at XR for Charging Release** | Select charging station availability |
| **D9** | **Manual Lock/Unlock Function at LD** | Select manual locking option (only when DIP 4 is set to ON) |
| **D10** | **Register Enable Charging & External Release** | Select enabling function via register address 400<br>Can be enabled via Modbus or web interface. |
| **Locking Actor Timing (For Pulsed Locking only)** | | Here you can set the times the system uses for the locking output signals when the “pulsed” locking option (D5) is set. |
| **Pulse Duration for Locking (0.5s Default, max. 3s)** | | Duration of the locking pulse<br>Any changes must be confirmed by clicking on the “submit” button. |
| **Pulse Duration for Unlocking (0.5s Default, max. 3s)** | | Duration of the unlocking pulse<br>Any changes must be confirmed by clicking on the “submit” button. |
| **Time between Locking Cycles (2s Default, max. 10s)** | | Waiting time between the locking and unlocking pulses if errors occur while the automatic locking option is running.<br>Any changes must be confirmed by clicking on the “submit” button. |

Table 8-3 “Configuration” tab [...]

| Parameter | Description |
|---|---|
| | |
| **Register Enable Charging** | This field corresponds to register address 400. The charging process is enabled with the “enable” setting if this option was selected via DIP 10.<br>Any changes must be confirmed by clicking on the “submit” button. |
| **Register Enable Digital Communication** | The “Digital Communication” function is selected in this field. This selection corresponds to the “Dig” setting on the PRESET CHARGE CURRENT rotary switch.<br>Any changes must be confirmed by clicking on the “submit” button. |
| **Register External Release, EVSE available** | This field corresponds to digital input XR (External Release) and is ORed to it. If the field is set to “enabled” OR digital input XR is set to High, the system is enabled.<br>Any changes must be confirmed by clicking on the “submit” button. |
| **Other** | |
| **Reject State D vehicles** | If this function is set to “enabled”, vehicles that charge in status D are rejected. (Status D = positive value of PWM signal on the Control Pilot = 3 V.) The device enters an error status and can only be reset via status A. (Status A = disconnection of the vehicle from the charging station.) |
| **Manual Lock** | This selection box is only active when DIP 9 = ON.<br>This function can be used to select whether digital input ML is operated with pulses (“pulsed”) or continuous signals (“permanent”).<br>– “pulsed”: with each pulse (> 200 ms) at input ML, it switches between locking and unlocking.<br>– “permanent”: locked as long as a logic 1 is present at input ML; unlocked on a logic 0. |
| **Buttons** | |
| **submit** | The modified configuration data is transmitted to the charging controller using this button, otherwise the changes to the settings are not applied. |
| **reset EVCC** | This button restarts the charging controller. |

## 8.4 Network tab

In order to safely transmit the changes, you must click on the “submit” button within the polling cycle (10 seconds). Otherwise, the original values will be restored.




Figure 8-3 “Network” web interface

Table 8-4 “Network” tab

| Parameter | Description |
|---|---|
| **MAC Address** | MAC address of the device. The MAC address is fixed, unique, and cannot be changed. |
| **IP Address Assignment DHCP** | This field allows you to choose between a fixed IP address and a DHCP request.<br>– “disabled”: a fixed IP address including subnet mask and standard gateway is set.<br>– “enabled”: a DHCP request is executed. If there is a DHCP server in the network, an IP address is assigned to the device. If there is also a DNS server in the network, the device can be accessed via the device name.<br>Any changes must be confirmed by clicking on the “submit” button. |
| **IP Address** | Here you can set the IP address of the device which is used if there is no active DHCP service.<br>Any changes must be confirmed by clicking on the “submit” button. |
| **Subnetmask** | Here you can set the subnet mask of the device which is used if there is no active DHCP service.<br>Any changes must be confirmed by clicking on the “submit” button. |

Table 8-4 “Network” tab [...]

| Parameter | Description |
|---|---|
| **Standard Gateway** | Here you can set the IP address of the standard gateway which is used if there is no active DHCP service.<br>Any changes must be confirmed by clicking on the “submit” button. |
| **Device Name** | You can access the system via the device name if a DNS server in the network can resolve the name. The default value is “EVCC_1”.<br>Any changes must be confirmed by clicking on the “submit” button. |
| **Serial Number** | The serial number of the device is fixed, unique, and cannot be changed. |
| **Button** | |
| **submit** | The modified configuration data is transmitted to the charging controller using this button, otherwise the changes to the settings are not applied. |

## 8.5 Energy tab

Energy meters which support the Modbus RTU protocol can be connected to the charging controller via the RS-485 interface. The energy meters must provide Integer data with a maximum of two data words in Little Endian or Big Endian format.

The measured values that are relevant for the charging process are cyclically read by the charging controller and displayed in the web interface. In addition, they are provided in the Modbus TCP registers for reading via the Ethernet interface.

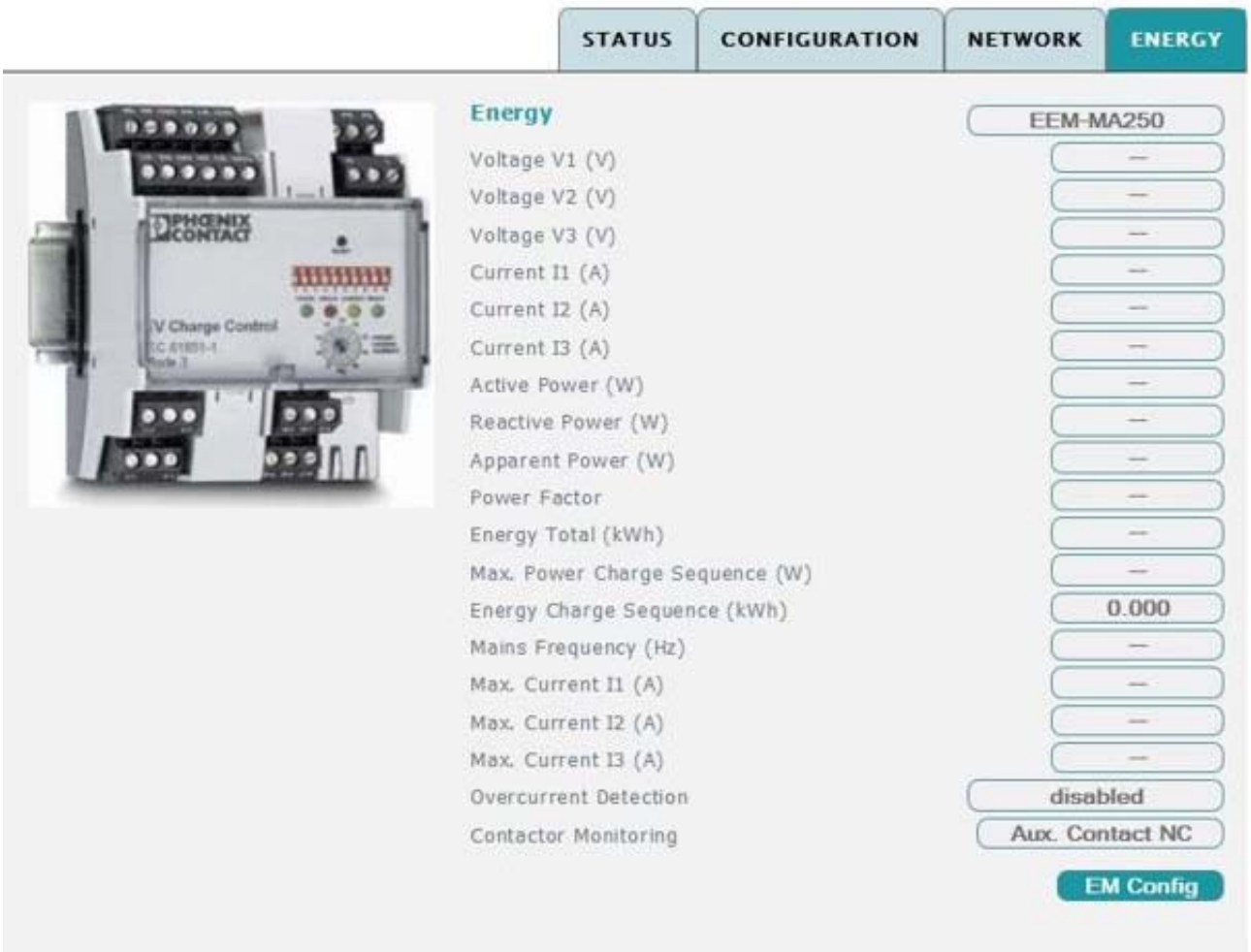


Figure 8-4 “Energy” web interface

The configuration of the energy meters allows measured values to be assigned to the display fields in various ways.

Deviations from the table are possible and may be necessary for some meters. It depends on the data that is provided by the meter. Please also refer to the documentation for the energy meter used.

Table 8-5 “Energy” tab

| Display value | Description |
|---|---|
| **Energy** | |
| **Voltage V1 - V3 (V)** | Voltage at the three phases in volts, either as outer conductor voltage or voltage to neutral conductor, depends on the configuration and the data provided by the meter. |
| **Current I1 - I3 (A)** | Current of the three phases in A |
| **Active Power (W)** | Real power in watts |
| **Reactive Power (W)** | Reactive power |
| **Apparent Power (W)** | Apparent power |
| **Power Factor** | Power factor/cos phi |
| **Energy Total (kWh)** | Reading value in kWh of a meter that cannot be reset |
| **Max. Power Charge Sequence (W)** | Maximum power of the current charging process in W |
| **Energy Charge Sequence (kWh)** | Energy transmitted for the current charging process in kWh |
| **Mains Frequency (Hz)** | Current mains frequency |
| **Max. Current I1 - I3 (A)** | Maximum measured current on conductors L1 - L3 during the current charging process |
| **Overcurrent Detection** | Monitoring of charging currents<br>– “enabled”: the charging controller compares the measured charging currents with the maximum permissible charging currents specified by the PWM signal on the Control Pilot.<br>In the event of an overcurrent of 10% ... 20%, the charging process is aborted after 100 s.<br>In the event of an overcurrent > 20%, it is switched off after 10 s. The charging controller enters an error state, the reset condition is status A.<br>– “disabled”: no monitoring of charging currents. |
| **Contactor Monitoring** | With this function, it is possible to check whether the load contactor switched the input free of voltage after the end of the charging process. If an error is detected, the charging control goes to error status. The error status can only be canceled by resetting the charging controller.<br>The following configurations are possible:<br>– “disabled”: the load contactor is not checked.<br>– “Voltage Measurement”: By means of an attached measuring device, it is possible to measure the voltage at the charging station output. In order to use this configuration, the dynamic response of the connected meter must be known. The charging controller evaluates the voltage that is read after four polling cycles (“Polling cycle” parameter).<br>– “Aux. Contact NO”/”Aux. Contact NC”: The charging controller evaluates the N/O or N/C auxiliary contacts of the load contactor. The evaluation takes place 500 ms after the load contactor is switched off. The length of time can be adjusted using the Modbus register 519. |
| **Buttons** | |
| **EM Config** | The configuration for the connection between the meter and charging controller can be accessed using this button. |

### 8.5.1 Energy, EM Configuration tab

Different energy meters can be connected to the charging controller which can be configured via the web interface or Modbus TCP. Configuration via the web interface is supported by the option that allows a complete parameter record to be read with the aid of an xml file and then transmitted to the device.

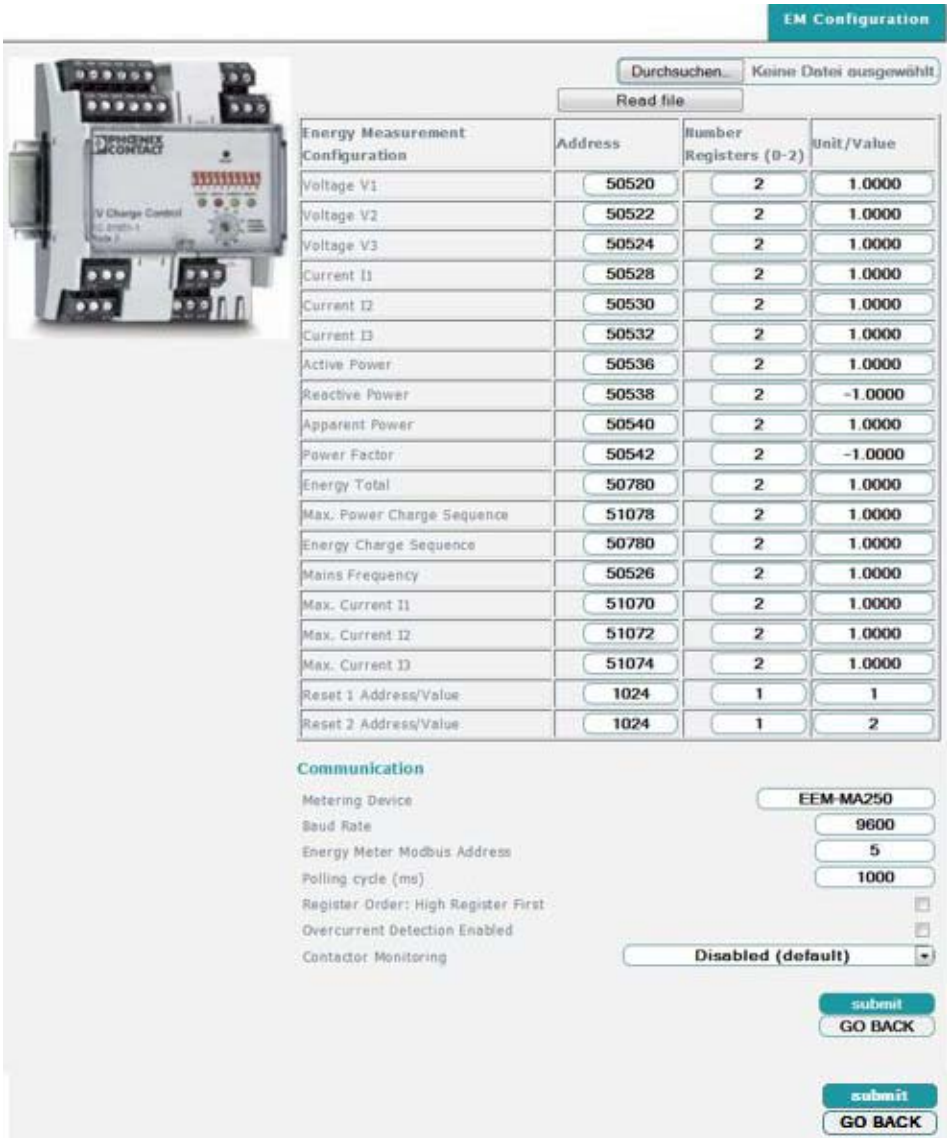


Figure 8-5 “Energy, EM Configuration” web interface

Each display value is parameterized using its Modbus address, the data length, and a conversion factor. For parameterization, familiarize yourself with the Modbus communication of your energy meter.

By default, the interface is configured so that the Phoenix Contact EEM-MA250 energy meter (Order No. 2901363) can be connected.

Table 8-6 “Energy, EM Configuration” tab

| Parameter | Description |
|---|---|
| **Energy Measurement Configuration** | |
| **Voltage V1**<br>**...**<br>**Max. Current I3** | **Address**: address of the corresponding measured value in the device in decimal notation<br>**Number Registers (0-2)**: number of data words the measured value in the meter is provided with. If “0” is entered here, the corresponding value is not read. This is necessary if the meter does not provide the corresponding values. Meters that code measured values in more than two data words cannot be read with the charging controller.<br>**Unit/Value**: conversion factor for read measured values for display in the web interface.<br>Depending on the manufacturer type, the measured values on the meters are provided with different bit values.<br>This factor is used to adapt to the specified units (V, A, W, kWh, Hz) for display in the web interface.<br>The measured values are stored independently of this value in the Modbus registers of the charging controller, the data is stored as raw values here. When starting up a new meter for the first time with the charging controller, we recommend carrying out a plausibility check for the displayed measured values and adapting the conversion factors, if necessary. |
| **Reset 1 Address/Value and Reset 2 Address/Value** | Certain measured values can be reset in the meter by writing defined values (max. 2 data word long) to the specified address area. For example, with the EEM-MA250, writing the value 1 to address 1024 resets the maximum value of currents I1 - I3. The charging controller automatically writes this value after the charging process has been completed (State A). If the value 0 is entered for number registers (0-2), no values are reset. |
| **Communication** | |
| **Metering Device** | The designation identifying the meter used can be freely selected. The designation is displayed on the “Energy” tab during operation. |
| **Baud Rate** | Transmission speed between the charging controller and meter (2.4 kbps; 4.8 kbps; 9.6 kbps; 19.2 kbps; 38.4 kbps). The value set here must match the value set on the meter. |
| **Energy Meter Modbus Address** | Address of the energy meter (0 ... 254). The value set here must match the value set on the meter. |
| **Polling cycle (ms)** | Time between two polling cycles. Please note that if the selected cycle time is too short, this may adversely affect system performance, such as Ethernet communication. |
| **Register Order: High Register First** | This field must be selected if the data in the meter is represented in Big Endian byte sequence. The most significant bit is stored at the smallest memory address. |
| **Overcurrent Detection Enabled** | This field must be selected if surge current monitoring is to be activated. |

Table 8-6 “Energy, EM Configuration” tab [...]

| Parameter | Description |
|---|---|
| **Contactor Monitoring** | This function can be used to activate the load contactor monitoring.<br>The following configurations are possible:<br>– “disabled”: the load contactor is not checked.<br>– “Voltage Measurement”: By means of an attached measuring device, it is possible to measure the voltage at the charging station output. In order to use this configuration, the dynamic response of the connected meter must be known. The charging controller evaluates the voltage that is read after four polling cycles (“Polling cycle” parameter).<br>– “Aux. Contact NO”/”Aux. Contact NC”: The charging controller evaluates the N/O or N/C auxiliary contacts of the load contactor. The evaluation takes place 500 ms after the load contactor is switched off. The length of time can be adjusted using the Modbus register 519. |
| **Buttons** | |
| **submit** | This button transmits the parameters from the charging controller. |
| **GO BACK** | This button takes you back to the “Energy” tab. |

## 8.5.2 Configuration file

To simplify the configuration of the connection of energy meters to the charging controller, the parameters can be imported with the aid of an xml file via the web interface. Tested configuration files can be downloaded in the Download area of the Phoenix Contact website (phoenixcontact.net/products) for certain energy meters.

```
<?xml version="1.0"?>
<EVCCConfig>
<EVCCRegAd>
        <pV1>50520</pV1>
        <pV2>50522</pV2>
        <pV3>50524</pV3>
        <pI1>50528</pI1>
        <pI2>50530</pI2>
        <pI3>50532</pI3>
        <pACP>50536</pACP>
        <pRP>50538</pRP>
        <pAPP>50540</pAPP>
        <pAF>50542</pAF>
        <pESS>50780</pESS>
        <pMP>51078</pMP>
        <pAAE>50780</pAAE>
        <pNF>50526</pNF>
        <pI1M>51070</pI1M>
        <pI2M>51072</pI2M>
        <pI3M>51074</pI3M>
        <pReset1>1024</pReset1>
        <vReset1>1</vReset1>
        <pReset2>1024</pReset2>
        <vReset2>2</vReset2>
    </EVCCRegAd>
    <EVCCReadReg>
        <rV1>2</rV1>
        <rV2>2</rV2>
        <rV3>2</rV3>
        <rI1>2</rI1>
        <rI2>2</rI2>
        <rI3>2</rI3>
        <rACP>2</rACP>
        <rRP>2</rRP>
        <rAPP>2</rAPP>
        <rAF>2</rAF>
        <rESS>2</rESS>
        <rMP>2</rMP>
        <rAAE>2</rAAE>
        <rNF>2</rNF>
        <rI1M>2</rI1M>
        <rI2M>2</rI2M>
        <rI3M>2</rI3M>
        <rReset1>1</rReset1>
        <rReset2>1</rReset2>
    </EVCCReadReg>
                    ...
                    ...
    <EVCCUnits>
            <uV1>1.0000</uV1>
            <uV2>1.0000</uV2>
            <uV3>1.0000</uV3>
            <uI1>1.0000</uI1>
            <uI2>1.0000</uI2>
            <uI3>1.0000</uI3>
            <uACP>1.0000</uACP>
            <uRP>-1.0000</uRP>
            <uAPP>1.0000</uAPP>
            <uAF>-1.0000</uAF>
            <uESS>1.0000</uESS>
            <uMP>1.0000</uMP>
            <uAAE>1.0000</uAAE>
            <uNF>1.0000</uNF>
            <uI1M>1.0000</uI1M>
            <uI2M>1.0000</uI2M>
            <uI3M>1.0000</uI3M>
        </EVCCUnits>
        <EVCCCfg>
            <pBaudrate>9600</pBaudrate>
            <pModBus>5</pModBus>
            <pPollcycleTm>1000</pPollcycleTm>
            <pName>EEM-MA250</pName>
            <hrf>false</hrf>
            <vOverICutOff>false</vOverICutOff>
            <vABVolDet>true</vABVolDet>
            <vContMon>3</vContMon>
        </EVCCCfg>
</EVCCConfig>
```

Figure 8-6 Configuration file

Table 8-7 Explanation of the configuration file

| Data area | Values in the order of the Energy tab (see Figure 8-4 on page 93) |
|---|---|
| **EVCCRegAd** | Addresses of the values to be read |
| **EVCCReadReg** | Number of data words for the measured values to be read |
| **EVCCUnits** | Conversion factors for the measured values to be read |
| **EVCCCfg** | Configuration and communication parameters |

# 9 Modbus description

You can access the device registers via Modbus. The device operates as a Modbus slave using address 180. It waits for incoming Modbus/TCP requests at port 502.

## 9.1 Register types

Modbus supports four register types which are used as follows.

Table 9-1 Modbus register

| Modbus register type | Value | Access |
|---|---|---|
| Input | 16 bit | Read |
| Discrete | 1 bit | Read |
| Holding | 16 bit | Read/write |
| Coils | 1 bit | Read/write |



You can combine several “Input” and “Holding” registers in order to transmit 32-bit data. Little Endian format is used to code this data, i.e., the word with the least significant element is listed first.

## 9.2 Register assignment

The following table shows how the device registers are assigned registers that can be accessed via Modbus.

Table 9-2 Register assignment

| Type | Address | Value | Access | Function | Coding |
|---|---|---|---|---|---|
| Input | 100 | 16 bit | Read | EV status | ASCII (8 bit), A ... F |
| | 101 | 16 bit | Read | Proximity charging current | Integer, amperes |
| | 102 | 32 bit | Read | Charging time | Integer, seconds |
| | 103 | | | | |
| | 104 | 16 bit | Read | DIP switch configuration | Binary, DIP 1 = LSB<br>Every switch corresponds to one bit. |
| | 105 | 32 bit | Read | Firmware version | Decimal, e.g., 0.4.30 = 430<br>FW[0] = 0; FW[1] = 4; FW[2] = 22;<br>FW[2] + FW[1] * 100 +<br>FW[0] * 10,000 |
| | 106 | | | | |
| | 107 | 16 bit | Read | Error codes | Hexadecimal<br>Bit Error<br>1. Cable rejection 13 A and 20 A<br>2. Cable rejection 13 A<br>3. Invalid PP value<br>4. Invalid CP value<br>5. Status F due to no charging station availability<br>6. Locking<br>7. Unlocking<br>8. LD unavailable during locking<br>9. Overcurrent shutdown<br>10. Communication problem between charging controller and meter when overcurrent shutdown is activated<br>11. Status D, vehicle rejected<br>12. Contactor failure detected<br>13. No diode in the Control Pilot circuit on the vehicle side |
| | 108 | 32 bit | Read | Display meter voltage V1 | Decimal |
| | 109 | | | | |
| | 110 | 32 bit | Read | Display meter voltage V2 | Decimal |
| | 111 | | | | |
| | 112 | 32 bit | Read | Display meter voltage V3 | Decimal |
| | 113 | | | | |
| | 114 | 32 bit | Read | Display meter current I1 | Decimal |
| | 115 | | | | |

Table 9-2 Register assignment [...]

| Type | Address | Value | Access | Function | Coding |
|---|---|---|---|---|---|
| Input | 116 | 32 bit | Read | Display meter current I2 | Decimal |
| | 117 | | | | |
| | 118 | 32 bit | Read | Display meter current I3 | Decimal |
| | 119 | | | | |
| | 120 | 32 bit | Read | Display meter real power | Decimal |
| | 121 | | | | |
| | 122 | 32 bit | Read | Display meter reactive power | Decimal |
| | 123 | | | | |
| | 124 | 32 bit | Read | Display meter apparent power | Decimal |
| | 125 | | | | |
| | 126 | 32 bit | Read | Display meter power factor | Decimal |
| | 127 | | | | |
| | 128 | 32 bit | Read | Display meter energy | Decimal |
| | 129 | | | | |
| | 130 | 32 bit | Read | Display meter maximum power | Decimal |
| | 131 | | | | |
| | 132 | 32 bit | Read | Energy of current charging process | Decimal |
| | 133 | | | | |
| | 134 | 32 bit | Read | Display meter mains frequency | Decimal |
| | 135 | | | | |
| | 136 | 32 bit | Read | Display meter maximum current I1 | Decimal |
| | 137 | | | | |
| | 138 | 32 bit | Read | Display meter maximum current I2 | Decimal |
| | 139 | | | | |
| | 140 | 32 bit | Read | Display meter maximum current I3 | Decimal |
| | 141 | | | | |
| | 142 | 16 bit | Read | Status of overcurrent shutdown | 1: overcurrent shutdown triggered |
| Discrete | 200 | 1 bit | Read | Digital input EN (Enable) | 1 bit |
| | 201 | 1 bit | Read | Digital input XR (External Release) | 1 bit |
| | 202 | 1 bit | Read | Digital input LD (Lock Detection) | 1 bit |
| | 203 | 1 bit | Read | Digital input ML (Manual Lock) | 1 bit |
| | 204 | 1 bit | Read | Digital output CR (Charger Ready) | 1 bit |
| | 205 | 1 bit | Read | Digital output LR (Locking Request) | 1 bit |
| | 206 | 1 bit | Read | Digital output VR (Vehicle Ready) | 1 bit |
| | 207 | 1 bit | Read | Digital output ER (Error) | 1 bit |

Table 9-2 Register assignment [...]

| Type | Address | Value | Access | Function | Coding |
|---|---|---|---|---|---|
| Holding | 300 | 1 x 16 bit | Read/write | Set charging current (PWM signal) | Integer, 6 ... 80 amperes |
| | 301<br>302<br>303 | 3 x 16 bit | Read | MAC address | Hexadecimal<br>E.g., 00:A0:45:66:4F:40<br>0X00A0 0X4566 0X4F40 |
| | 304<br>305<br>306<br>307<br>308<br>309 | 6 x 16 bit | Read | Serial number | ASCII, hexadecimal coded characters<br>E.g., EVCC10000041<br>0X4556 0X4343 0X3130<br>0X3030 0X3030 0X3431 |
| | 310<br>311<br>312<br>313<br>314 | 5 x 16 bit | Read/write | Device name | ASCII, hexadecimal coded characters<br>E.g., STATION123<br>0X5354 0X4154 0X494F<br>0X4E31 0X3233<br>The first character must not be a number. |
| | 315<br>316<br>317<br>318 | 4 x 16 bit | Read/write | IP address | Decimal<br>E.g., 192.168.0.8<br>192 168 0 8 |
| | 319<br>320<br>321<br>322 | 4 x 16 bit | Read/write | Subnet mask | Decimal<br>E.g., 255.255.255.0<br>255 255 255 0 |
| | 323<br>324<br>325<br>326 | 4 x 16 bit | Read/write | Gateway | Decimal<br>E.g., 192.168.0.1<br>192 168 0 1 |

Table 9-2 Register assignment [...]

| Type | Address | Value | Access | Function | Coding |
|---|---|---|---|---|---|
| Holding | 327 | 16 bit | Read/write | Definition of output CR | Decimal, see Table 9-3 “Function assignment of output registers for the digital outputs” |
| | 328 | 16 bit | | Definition of output LR | |
| | 329 | 16 bit | | Definition of output VR | |
| | 330 | 16 bit | | Definition of output ER | |
| | **Register addresses for connecting an energy meter** | | | | |
| | 331 | 16 bit | Read/write | Voltage V1 | Integer, according to the documentation for the connected energy meter |
| | 332 | 16 bit | | Voltage V2 | |
| | 333 | 16 bit | | Voltage V3 | |
| | 334 | 16 bit | | Current I1 | |
| | 335 | 16 bit | | Current I2 | |
| | 336 | 16 bit | | Current I3 | |
| | 337 | 16 bit | | Real power | |
| | 338 | 16 bit | | Reactive power | |
| | 339 | 16 bit | | Apparent power | |
| | 340 | 16 bit | | Power factor | |
| | 341 | 16 bit | | Energy meter total | |
| | 342 | 16 bit | | Maximum power (current charging process) | |
| | 343 | 16 bit | | Energy meter can be reset | |
| | 344 | 16 bit | | Mains frequency | |
| | 345 | 16 bit | | Maximum current I1 | |
| | 346 | 16 bit | | Maximum current I2 | |
| | 347 | 16 bit | | Maximum current I3 | |
| | 348 | 16 bit | | Reset register 1 | |
| | 349 | 16 bit | | Reset value 1 | |
| | 350 | 16 bit | | Reset register 2 | |
| | 351 | 16 bit | | Reset value 2 | |
| | **Conversion factors of values from the energy meter** | | | | |
| | 352 | 32 bit | Read/write | Voltage V1 | FLOAT (IEEE 754) |
| | 353 | | | | |
| | 354 | 32 bit | | Voltage V2 | |
| | 355 | | | | |
| | 356 | 32 bit | | Voltage V3 | |
| | 357 | | | | |
| | 358 | 32 bit | | Current I1 | |
| | 359 | | | | |
| | 360 | 32 bit | | Current I2 | |
| | 361 | | | | |

Table 9-2 Register assignment [...]

| Type | Address | Value | Access | Function | Coding |
|---|---|---|---|---|---|
| Holding | 362 | 32 bit | Read/write | Current I3 | FLOAT (IEEE 754) |
| | 363 | | | | |
| | 364 | 32 bit | | Real power | |
| | 365 | | | | |
| | 366 | 32 bit | | Reactive power | |
| | 367 | | | | |
| | 368 | 32 bit | | Apparent power | |
| | 369 | | | | |
| | 370 | 32 bit | | Power factor | |
| | 371 | | | | |
| | 372 | 32 bit | | Energy meter total | |
| | 373 | | | | |
| | 374 | 32 bit | | Maximum power (current charging process) | |
| | 375 | | | | |
| | 376 | 32 bit | | Energy meter can be reset | |
| | 377 | | | | |
| | 378 | 32 bit | | Mains frequency | |
| | 379 | | | | |
| | 380 | 32 bit | | Maximum current I1 | |
| | 381 | | | | |
| | 382 | 32 bit | | Maximum current I2 | |
| | 383 | | | | |
| | 384 | 32 bit | | Maximum current I3 | |
| | 385 | | | | |

Table 9-2 Register assignment [...]

| Type | Address | Value | Access | Function | Coding |
|---|---|---|---|---|---|
| Holding | 386 | 32 bit | Read/write | Baud rate for communication to energy meter | Integer, default = 9600 |
| | 387 | | | | |
| | 388 | 16 bit | | Modbus address of energy meter | Integer, default = 5 |
| | 389 | 16 bit | | Polling cycle of energy meter | Integer (ms), default = 1000 |
| | 390 | 16 bit | | Activation of the charging contactor | Integer<br>0: Contactor monitoring disabled<br>1: Voltage measurement in status A/B<br>2: Evaluating N/O auxiliary contact<br>3: Evaluating N/C auxiliary contact |
| | 391 | 8 x 16 bit | | Name of energy meter | ASCII hex.-coded, 15 characters + F68 |
| | 392 | | | | |
| | 393 | | | | |
| | 394 | | | | |
| | 395 | | | | |
| | 396 | | | | |
| | 397 | | | | |
| | 398 | | | | |

Table 9-2 Register assignment [...]

| Type | Address | Value | Access | Function | Coding |
|---|---|---|---|---|---|
| Coils | 400 | 1 bit | Read/write | Enable charging process | 1 bit |
| | 401 | 1 bit | | Request digital communication | 1 bit |
| | 402 | 1 bit | | Charging station available | 1 bit |
| | 403 | 1 bit | | Manual locking | 1 bit |
| | 404 | 1 bit | | Switch DHCP on/off | 1 bit (after switching, it can take up to 10 s before the system can be reached again.) |
| | 405 | 1 bit | | Output 1 | 1 bit, see “Function assignment of output registers for the digital outputs” on page 108 |
| | 406 | 1 bit | | Output 2 | |
| | 407 | 1 bit | | Output 3 | |
| | 408 | 1 bit | | Output 4 | |
| | 409 | 1 bit | | Activate overcurrent shutdown | 1 bit |
| | 410 | 1 bit | | Byte sequence | 1 bit, 0 = Little Endian, 1 = Big Endian |
| | 411 | 1 bit | | “Voltage in status A/B detected” function activated | 1 bit |
| | 412 | 1 bit | | “Status D, reject vehicle” function activated | 1 bit |
| | 413 | 1 bit | | Reset charging controller | 1 bit |
| | 414 | 1 bit | | Voltage in status A/B detected | 1 bit |
| | 415 | 1 bit | | Status D, vehicle rejected | 1 bit |
| | 416 | 1 bit | | Configuration of input ML | 1 bit<br>0 = pulsed input signals<br>1 = permanent input signals |

Table 9-2 Register assignment [...]

| Type | Address | Value | Access | Function | Coding |
|---|---|---|---|---|---|
| Holding | **Number of data words for the measured values** | | | | |
| | 500 | 16 bit | Read/write | Voltage V1 | Integer (0 - 2) |
| | 501 | 16 bit | | Voltage V2 | |
| | 502 | 16 bit | | Voltage V3 | |
| | 503 | 16 bit | | Current I1 | |
| | 504 | 16 bit | | Current I2 | |
| | 505 | 16 bit | | Current I3 | |
| | 506 | 16 bit | | Real power | |
| | 507 | 16 bit | | Reactive power | |
| | 508 | 16 bit | | Apparent power | |
| | 509 | 16 bit | | Power factor | |
| | 510 | 16 bit | | Energy meter total | |
| | 511 | 16 bit | | Maximum power (current charging process) | |
| | 512 | 16 bit | | Energy meter can be reset | |
| | 513 | 16 bit | | Mains frequency | |
| | 514 | 16 bit | | Maximum current I1 | |
| | 515 | 16 bit | | Maximum current I2 | |
| | 516 | 16 bit | | Maximum current I3 | |
| | 517 | 16 bit | | Reset 1 | |
| | 518 | 16 bit | | Reset 2 | |
| Holding | 519 | 16 bit | Read/write | Delay before contactor monitoring after ending the charging process | Integer (ms), default = 500 |

Table 9-3 Function assignment of output registers for the digital outputs

| Value | Function |
|---|---|
| ≤ 0 | Not permitted |
| 1 | Charging controller in status A |
| 2 | Charging controller in status B |
| 3 | Charging controller in status A and PWM ON |
| 4 | Charging controller in status B and PWM OFF |
| 5 | Charging controller in status C |
| 6 | Charging controller in status D |
| 7 | Charging controller in status E |
| 8 | Charging controller in status F |
| 9 | Charging controller in status A or B |
| 10 | Charging controller in status A or (B and PWM ON) |
| 11 | Charging controller in status A or (B and PWM OFF) |
| 12 | Charging controller in status A - C |
| 13 | Charging controller in status A - B or D |
| 14 | Charging controller in status A - D |
| 15 | Charging controller in status E - F |
| 16 | Charging controller in status C or D |
| 17 | PWM “on” |
| 18 | Charging controller has detected a valid PP |
| 19 | Charging controller has detected an invalid PP |
| 20 | Charging controller has detected a 13 A PP at the EV |
| 21 | Charging controller has detected a 20 A PP at the EV |
| 22 | Charging controller has detected a 32 A PP at the EV |
| 23 | Charging controller has detected a 63 A PP at the EV |
| 24 | Charging controller has detected a 13 A or 20 A PP at the EV |
| 25 | Charging controller has detected a 13 A or 20 A or 32 A PP |
| 26 | Insufficient current carrying capacity of the PP |
| 27 | Charging controller switches the “charging contactor” relay ON |
| 28 | Charging controller switches the “ventilator” relay ON |
| 29 | Locking active |
| 30 | The “Output1” register is set via Modbus |
| 31 | The “Output2” register is set via Modbus |
| 32 | The “Output3” register is set via Modbus |
| 33 | The “Output4” register is set via Modbus |
| 34 | Overcurrent detected |
| 35 | Contactor failure |
| 36 | State D, vehicle rejected |
| 37 | State B – D |
| ≥ 38 | Not permitted |