SOLID CONTACT PART NUMBER (6)	SIZE TYPE	WIRE SIZE AWG [mm²]	REF. ONLY CRIMP TENSILE LBS [N]	RECOMMENDED STRIP LENGTH INCH [mm]	CONTACT IDENTIFICATION INFO & NOTES
0460-204-12** 0460-211-12** 0460-220-12** 0460-235-12** 0460-258-12** 0462-203-12** 0462-210-12** 0462-214-12** 0462-215-12**	12 PIN 12 PIN 12 PIN 12 PIN 12 PIN 12 SOC 12 SOC 12 SOC 12 SOC	12 AWG 3.0 mm² 2.5 mm²	75 [334]	.222-.284 [5.64-7.21]	0462-215-12** MARKING 1 GRAY BAND, NARROW 1 BROWN BAND, NARROW 1 BROWN BAND, BROAD
		14 AWG 2.0 mm²	70 [311]		
0460-256-12**	12 PIN	1.5 mm² 16 AWG 1.0 mm²	35 [156]	.222-.284 [5.64-7.21]	
		18 AWG 0.75 mm²	25 [111]		
0460-215-16** 0462-209-16**	16 PIN 16 SOC	14 AWG 2.0 mm²	70 [311]	.250-.312 [6.35-7.92]	1 GREEN BAND, BROAD 1 GREEN BAND, BROAD
0460-002-16** 0460-202-16** 0460-211-16** 0460-230-16** 0460-235-16** 0460-247-16** 2325529-1 0462-004-16** 0462-007-16** 0462-201-16** 0462-214-16** 0462-221-16** 0462-222-16** 2325584-1	16 PIN 16 PIN 16 PIN 16 PIN 16 PIN 16 PIN 16 PIN 16 SOC 16 SOC 16 SOC 16 SOC 16 SOC 16 SOC 16 SOC	1.5 mm² 16 AWG 1.0 mm²	35 [156]	.250-.312 [6.35-7.92]	2325529-1 MARKING 3 BROWN BANDS 2325584-1 MARKING 2 BROWN BANDS 1 BLUE BAND 0460-002-1631 AND 0462-004-1631 MARKING 1 BLUE BAND, BROAD
		18 AWG 0.75 mm²	25 [111]		
		20 AWG 0.50 mm²	20 [89]		
0462-001-16**	16 SOC	16 AWG 1.0 mm²	35 [156]	.250-.312 [6.35-7.92]	1 BLUE BAND, NARROW
0462-223-16**	16 SOC	1.5 mm² 16 AWG 1.0 mm²	35 [156]	.117-.237 [4.49-6.02]	USE 2.0 mm² DIAL SET
0460-010-20** 0462-005-20**	20 PIN 20 SOC	16 AWG 1.00 mm² 18 AWG 0.75 mm²	20 [89]	.156-.218 [3.96-5.54]	1 PURPLE BAND, BROAD
2325531-1 0460-202-20** 0462-201-20** 2325530-1	20 PIN 20 PIN 20 SOC 20 SOC	20 AWG 0.50 mm²	20 [89]	.156-.218 [3.96-5.54]	2325531-1 MARKING 2 BROWN BANDS 1 BLACK BAND 2325530-1 MARKING 2 BROWN BANDS 1 GREEN BAND
		22 AWG 0.35 mm²	10 [44]		
112349 112352	12 PIN 12 SOC	12 AWG 3.0 mm² 2.5 mm²	75 [334]	.222-.284 [5.64-7.21]	SLOTTED (SPLIT) PIN (3) (4)
		14 AWG 2.0 mm²	70 [311]		
0460-201-1690 0461-201-1690	16 PIN 16 SOC	1.5 mm² 16 AWG 1.0 mm²	35 [156]	.222-.284 [5.64-7.21]	SLOTTED (SPLIT) PIN
		18 AWG 0.75 mm²	25 [111]		
8960-025-12603 8962-014-12603	12 PIN 12 SOC	4.0 mm² 12 AWG 3.0 mm² 2.5 mm²	75 [334]	.222-.284 [5.64-7.21]	(11)
8960-020-16603 8962-011-16603	16 PIN 16 SOC	1.5 mm² 16 AWG 1.0 mm²	35 [156]	.250-.312 [6.35-7.92]	
		18 AWG 0.75 mm²	25 [111]		
		20 AWG 0.50 mm²	20 [89]		

(5) DEPTH ADJUSTING SCREW P/N 0426-209-0000 INCLUDES JAM NUT.

(4) USE 2.5/14 SETTING FOR THIS PART WITH 12 AWG.

(3) USE 1.5 SETTING FOR THIS PART WITH 14 AWG.

(2) CAUTION: NEVER CLOSE TOOL ON GAGE G454. CLOSE TOOL FIRST AND THEN INSERT GAGE.

(1) USE GAGE G454 IN DIAL POSITION 1.0/16 TO CHECK WEAR ANNUALLY. CHECK OFTEN IF USED FOR FREQUENT CRIMPING.

NOTES: UNLESS OTHERWISE SPECIFIED

REV M2 HDT-48-00

REVISIONS

SYM	DESCRIPTION	DATE	APPROVED
M2	ECR-17-018412	12/2017	CM

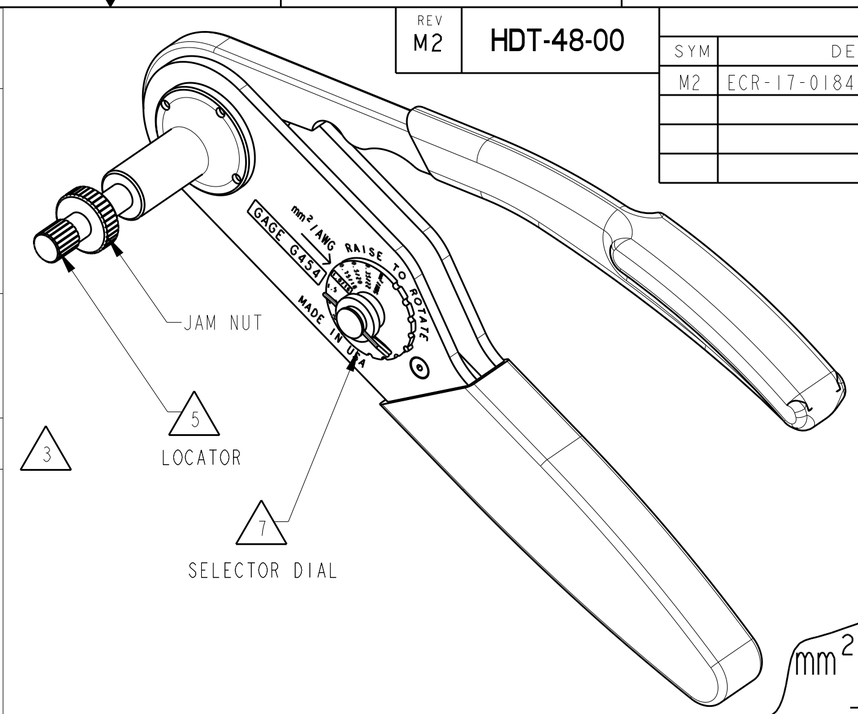

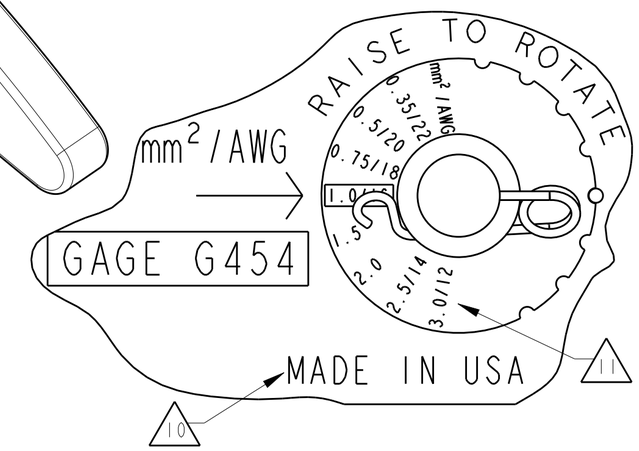

SOLID CONTACT PART NUMBER (6)	SIZE TYPE	WIRE SIZE AWG [mm²]	REF. ONLY CRIMP TENSILE LBS [N]	RECOMMENDED STRIP LENGTH INCH [mm]	CONTACT IDENTIFICATION INFO & NOTES
4060-002-12** 4062-002-12**	12 PIN 12 SOC	12 AWG 3.0 mm² 2.5 mm²	75 [334]	.250-.312 [6.35-7.92]	(3) (4)
		14 AWG 2.0 mm²	70 [311]		
4060-001-16** 4062-001-16**	16 PIN 16 SOC	1.5 mm² 16 AWG 1.0 mm²	35 [156]	.240-.302 [6.10-7.67]	
		18 AWG 0.75 mm²	25 [111]		

(11) USE 3.0/12 SETTING FOR THIS PART WITH 4.0mm².

(10) COUNTRY OF ORIGIN "MADE IN USA" SHOWN AS EXAMPLE.

9. SEE 0425-071-0000 INSTRUCTION GUIDE, SHIPPED WITH TOOL.

8. OVERALL TOOL LENGTH IS APPROXIMATELY 9.90 [251.46].

(7) CYCLE TOOL TO OPEN HANDLES. REMOVE LOCK CLIP. RAISE AND ROTATE DIAL TO SELECT WIRE SIZE. REPLACE LOCK CLIP.

(6) WHEN **= 31, PLATING IS GOLD.
WHEN **=141, PLATING IS NICKEL.

	SIGNATURE & DATE
DR	J.APOSTOL 21FEB2007
CHK	
PE	
APPD	
SCALE NONE	WT

TOOL, HAND CRIMP FOR SIZE 20, 16 & 12 SOLID CONTACTS

ENVELOPE

EP — MATL. CODE

DEUTSCH INDUSTRIAL
3850 INDUSTRIAL AVE.
HEMET, CA 92545

C — HDT-48-00

DWG SIZE — CODE 4AFU8 — SHEET 1 OF 1