Panel feed-through terminal block - VDFK 4/K - 0709233

Please be informed that the data shown in this PDF Document is generated from our Online Catalog. Please find the complete data in the user's documentation. Our General Terms of Use for Downloads are valid (http://download.phoenixcontact.com)



Panel feed-through terminal block, Connection method: Screw connection, Solder connection, Load current : 32 A, Cross section: 0.2 mm² - 6 mm², AWG 24 - 12, Connection direction of the conductor to plug-in direction: 0 °, Width: 10 mm, Color: gray

Product Features

- Easy fixing using plastic knurled nut or quick mounting wedge
- Touch-proof insulating housing
- Spacer plates increase air and creepage distances
- Terminal blocks can be grouped
- Universal screw connection with screw locking

Key commercial data

package_quantity	50
GTIN	4017918117023

Technical data

General

Number of levels	1
Number of connections	2
Color	gray
Insulating material	PA
Inflammability class according to UL 94	V0

General

Rated surge voltage	6 kV
Pollution degree	3
Surge voltage category	III
Insulating material group	I
Connection in acc. with standard	IEC 60947-7-1
Nominal current I_N	32 A
Nominal voltage U_N	500 V
Open side panel	nein
Number of positions	1

Dimensions

Width	10 mm
Length	25.5 mm

Panel feed-through terminal block - VDFK 4/K - 0709233

Technical data

Connection data

Connection side	Outside
Connection method	Screw connection
Conductor cross section solid min.	0.2 mm²
Conductor cross section solid max.	6 mm²
Conductor cross section stranded min.	0.2 mm²
Conductor cross section stranded max.	4 mm²
Conductor cross section AWG/kcmil min.	24
Conductor cross section AWG/kcmil max	10
Conductor cross section stranded, with ferrule without plastic sleeve min.	0.25 mm²
Conductor cross section stranded, with ferrule without plastic sleeve max.	4 mm²
Conductor cross section stranded, with ferrule with plastic sleeve min.	0.25 mm²
Conductor cross section stranded, with ferrule with plastic sleeve max.	4 mm²
2 conductors with same cross section, solid min.	0.2 mm²
2 conductors with same cross section, solid max.	1.5 mm²
2 conductors with same cross section, stranded min.	0.2 mm²
2 conductors with same cross section, stranded max.	1.5 mm²
2 conductors with same cross section, stranded, ferrules without plastic sleeve, min.	0.25 mm²
2 conductors with same cross section, stranded, ferrules without plastic sleeve, max.	1.5 mm²
2 conductors with same cross section, stranded, TWIN ferrules with plastic sleeve, min.	0.5 mm²
2 conductors with same cross section, stranded, TWIN ferrules with plastic sleeve, max.	1.5 mm²
Stripping length	8 mm
Internal cylindrical gage	A4
Screw thread	M3
Tightening torque, min	0.6 Nm
Tightening torque max	0.8 Nm
Connection side	Inside
Connection method	Solder connection

classifications

eCl@ss

eCl@ss 4.0	27141131
eCl@ss 4.1	27141131
eCl@ss 5.0	27141134
eCl@ss 5.1	27141134
eCl@ss 6.0	27141134

Panel feed-through terminal block - VDFK 4/K - 0709233

classifications

eCl@ss

eCl@ss 7.0	27141134
eCl@ss 8.0	27141134

ETIM

ETIM 2.0	EC001283
ETIM 3.0	EC001283
ETIM 4.0	EC001283
ETIM 5.0	EC001283

UNSPSC

UNSPSC 6.01	30211811
UNSPSC 7.0901	39121410
UNSPSC 11	39121410
UNSPSC 12.01	39121410
UNSPSC 13.2	39121410

approvals

CSA / CSA / UL Recognized / KEMA-KEUR / cUL Recognized / IECEE CB Scheme / GOST / GOST / cULus Recognized /

Approval details

CSA

Nominal voltage UN	300 V
Nominal current IN	30 A
mm²/AWG/kcmil	28-10

Usegroups	**B**	**D**	
Nominal voltage UN	300 V	300 V	300 V
Nominal current IN	30 A	10 A	30 A
mm²/AWG/kcmil	28-10	28-10	28-10

UL Recognized

Usegroups	**B**	**C**	**D**
Nominal voltage UN	300 V	150 V	300 V

Panel feed-through terminal block - VDFK 4/K - 0709233

approvals

Usegroups	B	C	D
Nominal current IN	30 A	30 A	10 A
mm²/AWG/kcmil	30-10	30-10	30-10

KEMA-KEUR

Nominal voltage UN	500 V
Nominal current IN	32 A
mm²/AWG/kcmil	4

cUL Recognized

Usegroups	B	C	D
Nominal voltage UN	300 V	150 V	300 V
Nominal current IN	30 A	30 A	10 A
mm²/AWG/kcmil	30-10	30-10	30-10

IECEE CB Scheme

Nominal voltage UN	500 V
Nominal current IN	32 A
mm²/AWG/kcmil	4

GOST

cULus Recognized

Drawings

Panel feed-through terminal block - VDFK 4/K - 0709233

Dimensioned drawing

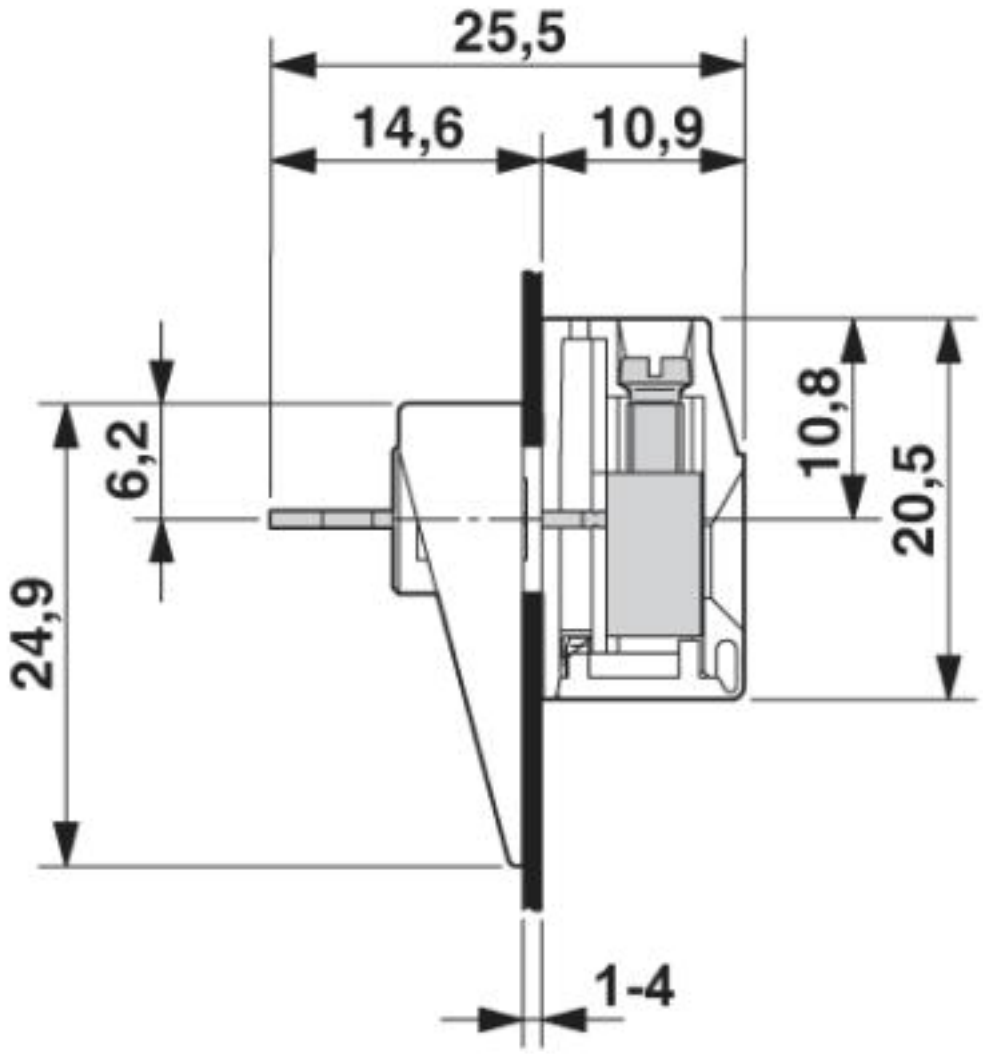

Panel feed-through terminal block - VDFK 4/K - 0709233

Dimensioned drawing

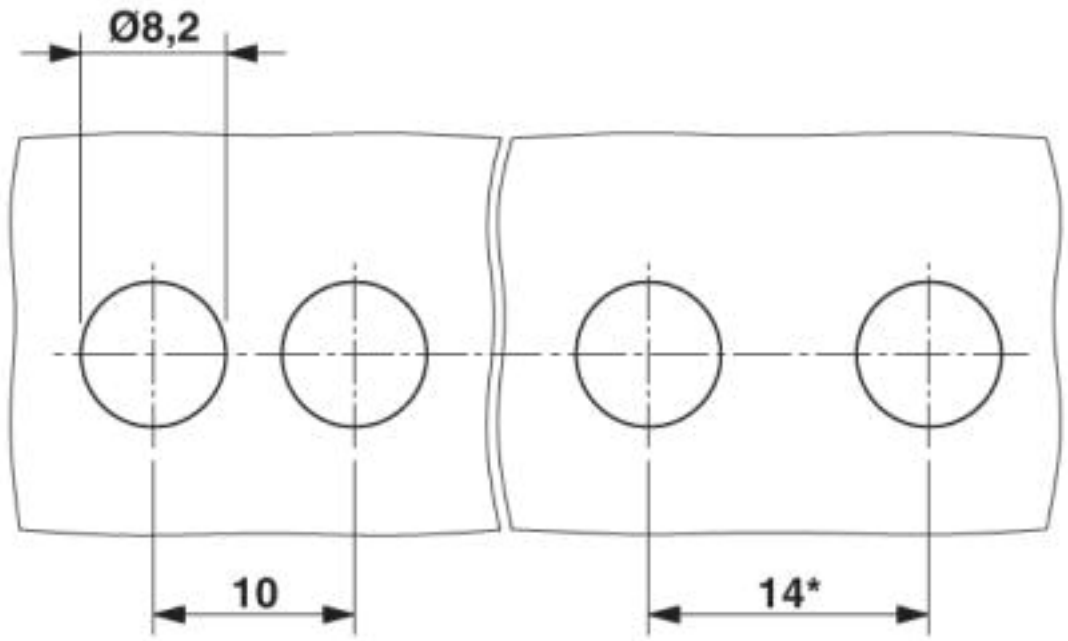

* Dimensions when using the DP-VDFK 4/4 spacer plate

© Phoenix Contact 2013 - all rights reserved
http://www.phoenixcontact.com