PCB terminal block - MKDSP 10N/ 3-10,16 - 1774137

Please be informed that the data shown in this PDF Document is generated from our Online Catalog. Please find the complete data in the user's documentation. Our General Terms of Use for Downloads are valid (http://download.phoenixcontact.com)



PCB terminal block, Nominal current: 76 A, Nom. voltage: 1000 V, Pitch: 10.16 mm, Number of positions: 3, Connection method: Screw connection, Mounting: Soldering, Conductor/PCB connection direction: 0 °, Color: green, The article can be aligned to create different nos. of positions!

Product Features

- Integrated test connection
- High-capacity PCB terminal blocks with screw connection up to 16 mm², stranded, and a current carrying capacity of 76 A
- Terminal block bases that can be mounted side by side to create any number of positions
- Individual adjustment of voltage requirements using RZ pitch spacers

Key commercial data

package_quantity	50
GTIN	4046356481588

Technical data

Dimensions

Length	18.8 mm
Height	31 mm
Pitch	10.16 mm
Dimension a	20.32 mm
Pin dimensions	1 x 0,9 mm
Hole diameter	1.5 mm

General

Range of articles	MKDSP 10N
Insulating material group	I
Rated surge voltage (III/3)	8 kV
Rated surge voltage (III/2)	8 kV
Rated surge voltage (II/2)	6 kV
Rated voltage (III/3)	690 V
Rated voltage (III/2)	1000 V
Rated voltage (II/2)	1000 V
Connection in acc. with standard	EN-VDE
Nominal current I_N	76 A
Nominal cross section	10 mm²
Maximum load current	76 A (with 16 mm² conductor cross section)

PCB terminal block - MKDSP 10N/ 3-10,16 - 1774137

Technical data

General

Insulating material	PA
Solder pin surface	Sn
Inflammability class according to UL 94	V0
Internal cylindrical gage	B 6
Stripping length	10 mm
Number of positions	3
Screw thread	M4
Tightening torque, min	1.2 Nm
Tightening torque max	1.5 Nm

Connection data

Conductor cross section solid min.	0.5 mm²
Conductor cross section solid max.	16 mm²
Conductor cross section stranded min.	0.5 mm²
Conductor cross section stranded max.	16 mm²
Conductor cross section stranded, with ferrule without plastic sleeve min.	0.5 mm²
Conductor cross section stranded, with ferrule without plastic sleeve max.	16 mm²
Conductor cross section stranded, with ferrule with plastic sleeve min.	0.5 mm²
Conductor cross section stranded, with ferrule with plastic sleeve max.	16 mm²
Conductor cross section AWG/kcmil min.	20
Conductor cross section AWG/kcmil max	6
2 conductors with same cross section, solid min.	0.5 mm²
2 conductors with same cross section, solid max.	4 mm²
2 conductors with same cross section, stranded min.	0.5 mm²
2 conductors with same cross section, stranded max.	4 mm²
2 conductors with same cross section, stranded, ferrules without plastic sleeve, min.	0.5 mm²
2 conductors with same cross section, stranded, ferrules without plastic sleeve, max.	2.5 mm²
2 conductors with same cross section, stranded, TWIN ferrules with plastic sleeve, min.	0.5 mm²
2 conductors with same cross section, stranded, TWIN ferrules with plastic sleeve, max.	6 mm²
Minimum AWG according to UL/CUL	20
Maximum AWG according to UL/CUL	6

classifications

eCl@ss

eCl@ss 4.0	27141109
eCl@ss 4.1	27141109

PCB terminal block - MKDSP 10N/ 3-10,16 - 1774137

classifications

eCl@ss

eCl@ss 5.0	27141190
eCl@ss 5.1	27141190
eCl@ss 6.0	27261101
eCl@ss 7.0	27440401
eCl@ss 8.0	27440401

ETIM

ETIM 3.0	EC001121
ETIM 4.0	EC002643
ETIM 5.0	EC002643

UNSPSC

UNSPSC 6.01	30211801
UNSPSC 7.0901	39121432
UNSPSC 11	39121432
UNSPSC 12.01	39121432
UNSPSC 13.2	39121432

approvals

UL Recognized / cUL Recognized / GOST / VDE Gutachten mit Fertigungsüberwachung / CCA / IECEE CB Scheme / GOST / cULus Recognized /

Approval details

UL Recognized

Usegroups	**B**	**C**	**D**
Nominal voltage UN	300 V	300 V	600 V
Nominal current IN	60 A	60 A	5 A
mm²/AWG/kcmil	20-6	20-6	20-6

cUL Recognized

Usegroups	**B**	**C**	**D**
Nominal voltage UN	300 V	300 V	600 V
Nominal current IN	60 A	60 A	5 A
mm²/AWG/kcmil	20-6	20-6	20-6

PCB terminal block - MKDSP 10N/ 3-10,16 - 1774137

approvals

GOST

VDE Gutachten mit Fertigungsüberwachung

Nominal voltage UN	1000 V
Nominal current IN	76 A
mm²/AWG/kcmil	0.5-16

CCA

Nominal voltage UN	1000 V
Nominal current IN	76 A
mm²/AWG/kcmil	0.5-16

IECEE CB Scheme

Nominal voltage UN	1000 V
Nominal current IN	76 A
mm²/AWG/kcmil	0.5-16

cULus Recognized

accessories

Test plug terminal block

MPS-MT - 0201744



PCB terminal block - MKDSP 10N/ 3-10,16 - 1774137

accessories

RPS - 0201647



Screwdriver tools

SZS 0,6X3,5 - 1205053



accessories

SK 10/5: 0-9 - 0804688

Drawings

PCB terminal block - MKDSP 10N/ 3-10,16 - 1774137

Drilling diagram

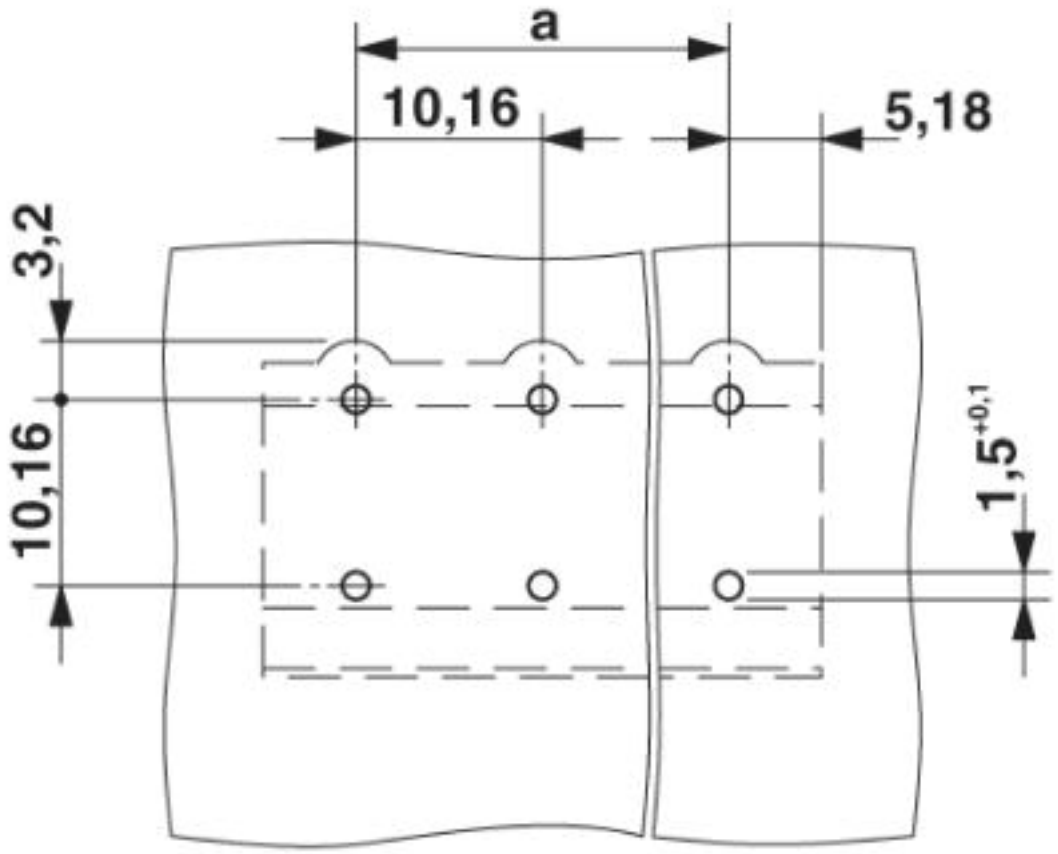

PCB terminal block - MKDSP 10N/ 3-10,16 - 1774137

Diagram

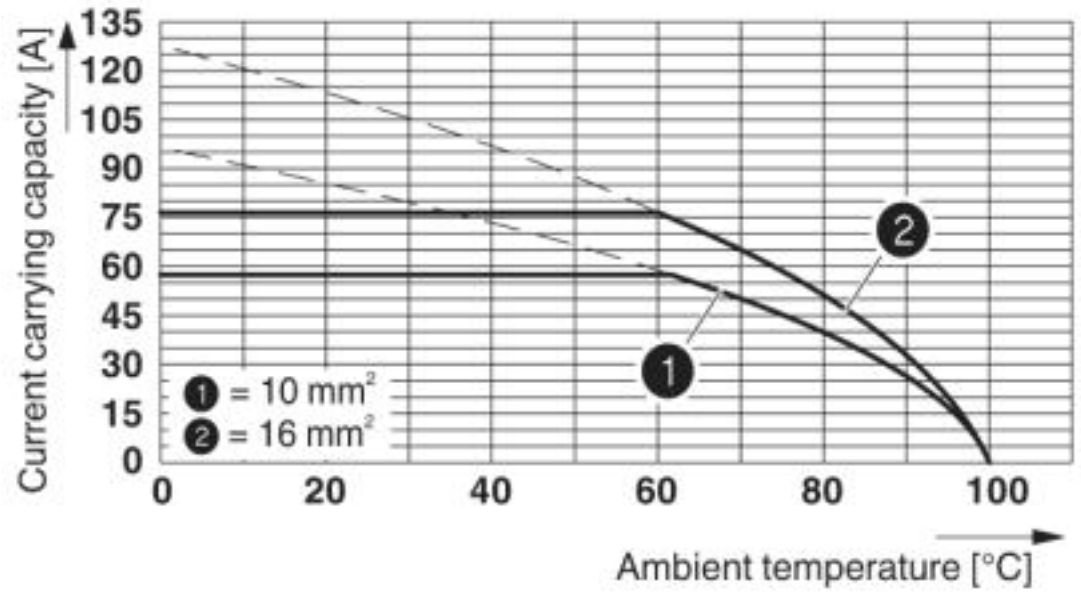

Type: MKDSP 10N/...-10,16Tested in accordance with DIN EN 60512-5-2:2003-01Reduction factor = 1No. of positions: 5

Dimensioned drawing

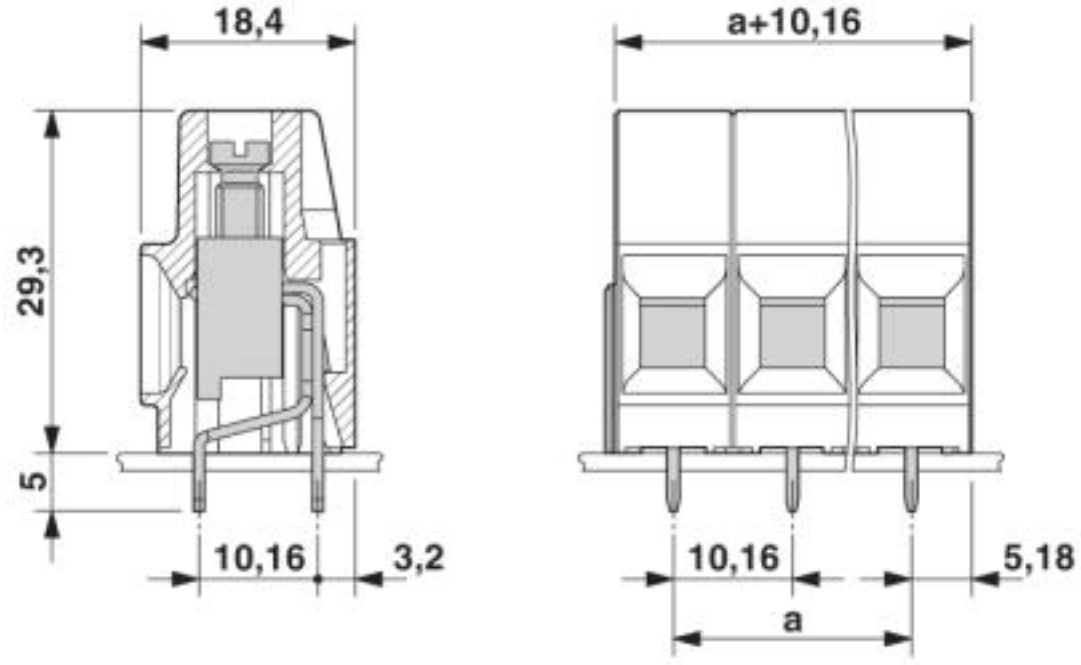

© Phoenix Contact 2013 - all rights reserved
http://www.phoenixcontact.com