# Printed-circuit board connector - FKC 2,5/18-ST-5,08 - 1875917

Please be informed that the data shown in this PDF Document is generated from our Online Catalog. Please find the complete data in the user's documentation. Our General Terms of Use for Downloads are valid (http://download.phoenixcontact.com)

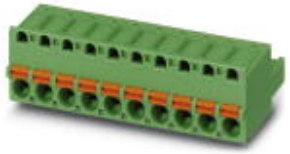

The figure shows a 10-position version of the product

Plug component, Nominal current: 12 A, Rated voltage (III/2): 320 V, Number of positions: 18, Pitch: 5.08 mm, Connection method: Spring-cage conn., Color: green, Contact surface: Tin

## Key commercial data

| | |
|---|---|
| **package_quantity** | 50 |
| **GTIN** | 4017918246518 |

## Technical data

### Dimensions

| | |
|---|---|
| **Pitch** | 5.08 mm |
| **Dimension a** | 86.36 mm |

### General

| | |
|---|---|
| **Range of articles** | FKC 2,5/..-ST |
| **Insulating material group** | I |
| **Rated surge voltage (III/3)** | 4 kV |
| **Rated surge voltage (III/2)** | 4 kV |
| **Rated surge voltage (II/2)** | 4 kV |
| **Rated voltage (III/3)** | 250 V |
| **Rated voltage (III/2)** | 320 V |
| **Rated voltage (II/2)** | 630 V |
| **Connection in acc. with standard** | EN-VDE |
| **Nominal current $I_N$** | 12 A |
| **Nominal cross section** | 2.5 mm² |
| **Maximum load current** | 12 A |
| **Insulating material** | PA |
| **Inflammability class according to UL 94** | V0 |
| **Internal cylindrical gage** | A2 |
| **Stripping length** | 10 mm |
| **Number of positions** | 18 |

### Connection data

| | |
|---|---|
| **Conductor cross section solid min.** | 0.2 mm² |

# Printed-circuit board connector - FKC 2,5/18-ST-5,08 - 1875917

## Technical data

### Connection data

| | |
|---|---|
| **Conductor cross section solid max.** | 2.5 mm² |
| **Conductor cross section stranded min.** | 0.2 mm² |
| **Conductor cross section stranded max.** | 2.5 mm² |
| **Conductor cross section stranded, with ferrule without plastic sleeve min.** | 0.25 mm² |
| **Conductor cross section stranded, with ferrule without plastic sleeve max.** | 2.5 mm² |
| **Conductor cross section stranded, with ferrule with plastic sleeve min.** | 0.25 mm² |
| **Conductor cross section stranded, with ferrule with plastic sleeve max.** | 2.5 mm² |
| **Conductor cross section AWG/kcmil min.** | 24 |
| **Conductor cross section AWG/kcmil max** | 12 |
| **2 conductors with same cross section, stranded, TWIN ferrules with plastic sleeve, min.** | 0.5 mm² |
| **2 conductors with same cross section, stranded, TWIN ferrules with plastic sleeve, max.** | 1.5 mm² |
| **Minimum AWG according to UL/CUL** | 26 |
| **Maximum AWG according to UL/CUL** | 12 |

## classifications

### eCl@ss

| | |
|---|---|
| **eCl@ss 4.0** | 272607xx |
| **eCl@ss 4.1** | 27260701 |
| **eCl@ss 5.0** | 27260701 |
| **eCl@ss 5.1** | 27260701 |
| **eCl@ss 6.0** | 27260704 |
| **eCl@ss 7.0** | 27440402 |
| **eCl@ss 8.0** | 27440402 |

### ETIM

| | |
|---|---|
| **ETIM 3.0** | EC001121 |
| **ETIM 4.0** | EC002638 |
| **ETIM 5.0** | EC002638 |

### UNSPSC

| | |
|---|---|
| **UNSPSC 6.01** | 30211810 |
| **UNSPSC 7.0901** | 39121409 |
| **UNSPSC 11** | 39121409 |
| **UNSPSC 12.01** | 39121409 |
| **UNSPSC 13.2** | 39121409 |

# Printed-circuit board connector - FKC 2,5/18-ST-5,08 - 1875917

## approvals

UL Recognized / VDE Gutachten mit Fertigungsüberwachung / cUL Recognized / GOST / IECEE CB Scheme / GOST / CCA / cULus Recognized /

### Approval details

**UL Recognized**

| Usegroups | B | D |
|---|---|---|
| Nominal voltage UN | 300 V | 300 V |
| Nominal current IN | 10 A | 10 A |
| mm²/AWG/kcmil | 26-12 | 26-12 |

**VDE Gutachten mit Fertigungsüberwachung**

| | |
|---|---|
| Nominal voltage UN | 250 V |
| Nominal current IN | 12 A |
| mm²/AWG/kcmil | 0.2-2.5 |

**cUL Recognized**

| Usegroups | B | D |
|---|---|---|
| Nominal voltage UN | 300 V | 300 V |
| Nominal current IN | 10 A | 10 A |
| mm²/AWG/kcmil | 26-12 | 26-12 |

**GOST**

**IECEE CB Scheme**

| | |
|---|---|
| Nominal voltage UN | 250 V |
| Nominal current IN | 12 A |
| mm²/AWG/kcmil | 0.2-2.5 |

# Printed-circuit board connector - FKC 2,5/18-ST-5,08 - 1875917

## approvals

| CCA | |
|---|---|
| | |
| Nominal voltage UN | 250 V |
| Nominal current IN | 12 A |
| mm²/AWG/kcmil | 0.2-2.5 |

cULus Recognized

## accessories

**Coding element**

CP-MSTB - 1734634



**Test plug terminal block**

MPS-MT - 0201744



RPS - 0201647



**Insulating sleeve**

# Printed-circuit board connector - FKC 2,5/18-ST-5,08 - 1875917

## accessories

MPS-IH WH - 0201663



MPS-IH RD - 0201676



MPS-IH BU - 0201689



MPS-IH GN - 0201702



**Screwdriver tools**

SZS 0,6X3,5 - 1205053



**Labeled terminal marker**

# Printed-circuit board connector - FKC 2,5/18-ST-5,08 - 1875917

## accessories

SK 5,08/3,8:FORTL.ZAHLEN - 0804293



**Terminal marking**

SK 5,08/3,8:UNBEDRUCKT - 0805412



**Marker pen**

B-STIFT - 1051993



## accessories

STZ 4-FKC-5,08 - 1876877



STZ 8-FKC-5,08 - 1876880

# Printed-circuit board connector - FKC 2,5/18-ST-5,08 - 1875917

## accessories

SK 5,08/3,8:SO - 0805085



## Drawings

Dimensioned drawing

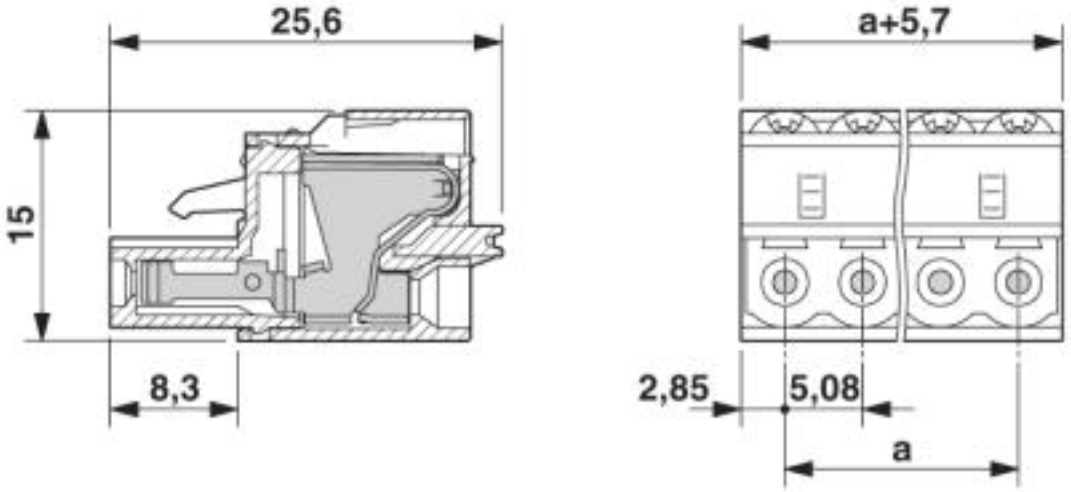


© Phoenix Contact 2013 - all rights reserved
http://www.phoenixcontact.com