PCB terminal block - PTSA 0,5/12-2,5-Z - 1990106

Please be informed that the data shown in this PDF Document is generated from our Online Catalog. Please find the complete data in the user's documentation. Our General Terms of Use for Downloads are valid (http://download.phoenixcontact.com)



The figure shows a 10-position version of the product

PCB terminal block, Nominal current: 2 A, Nom. voltage: 250 V, Pitch: 2.5 mm, Number of positions: 12, Connection method: Spring-cage conn., Mounting: Soldering, Conductor/PCB connection direction: 45 °, Color: green, Offset soldering legs, two-rowed

Product Features

- Compact design with easy actuation and direct plug-in technology
- 2.5 mm pitch
- Dielectric strength and mechanical stability increased thanks to zigzag pinning. Pinning always starts at the front right position. Special pinning versions are available on request.
- Color coding and mixed pitches as an option

Key commercial data

package_quantity	50
GTIN	4017918973674

Technical data

Dimensions

Length	12 mm
Height	13.1 mm
Pitch	2.5 mm
Dimension a	27.5 mm
Pin dimensions	0,4 x 0,75
Pin spacing	2.5 mm
Hole diameter	1 mm

General

Range of articles	PTSA 0,5
Insulating material group	I
Rated surge voltage (III/3)	2.5 kV
Rated surge voltage (III/2)	2.5 kV
Rated surge voltage (II/2)	2.5 kV
Rated voltage (III/3)	160 V
Rated voltage (III/2)	250 V
Rated voltage (II/2)	400 V
Connection in acc. with standard	EN-VDE

PCB terminal block - PTSA 0,5/12-2,5-Z - 1990106

Technical data

General

Nominal current I_N	2 A
Nominal cross section	0.5 mm²
Maximum load current	2 A
Insulating material	PA
Solder pin surface	Sn
Inflammability class according to UL 94	V0
Stripping length	9 mm
Number of positions	12

Connection data

Conductor cross section solid min.	0.14 mm²
Conductor cross section solid max.	0.5 mm²
Conductor cross section stranded min.	0.2 mm²
Conductor cross section stranded max.	0.5 mm²
Conductor cross section AWG/kcmil min.	24
Conductor cross section AWG/kcmil max	20
Minimum AWG according to UL/CUL	26
Maximum AWG according to UL/CUL	20

classifications

eCl@ss

eCl@ss 4.0	272607xx
eCl@ss 4.1	27260701
eCl@ss 5.0	27141190
eCl@ss 5.1	27141190
eCl@ss 6.0	27261101
eCl@ss 7.0	27440401
eCl@ss 8.0	27440401

ETIM

ETIM 3.0	EC001121
ETIM 4.0	EC002643
ETIM 5.0	EC002643

UNSPSC

UNSPSC 6.01	30211801
UNSPSC 7.0901	39121432
UNSPSC 11	34131203
UNSPSC 12.01	39121432
UNSPSC 13.2	39121432

PCB terminal block - PTSA 0,5/12-2,5-Z - 1990106

approvals

UL Recognized / VDE Gutachten mit Fertigungsüberwachung / cUL Recognized / CCA / GOST / GOST / cULus Recognized /

Approval details

UL Recognized

Usegroups	B	D
Nominal voltage UN	300 V	300 V
Nominal current IN	2 A	2 A
mm²/AWG/kcmil	26-20	26-20

VDE Gutachten mit Fertigungsüberwachung

Nominal voltage UN	250 V
Nominal current IN	2 A
mm²/AWG/kcmil	0.5

cUL Recognized

Usegroups	B	D
Nominal voltage UN	300 V	300 V
Nominal current IN	2 A	2 A
mm²/AWG/kcmil	26-20	26-20

CCA

Nominal voltage UN	
Nominal current IN	2 A
mm²/AWG/kcmil	0.5

GOST

PCB terminal block - PTSA 0,5/12-2,5-Z - 1990106

approvals

cULus Recognized

Drawings

Drilling diagram

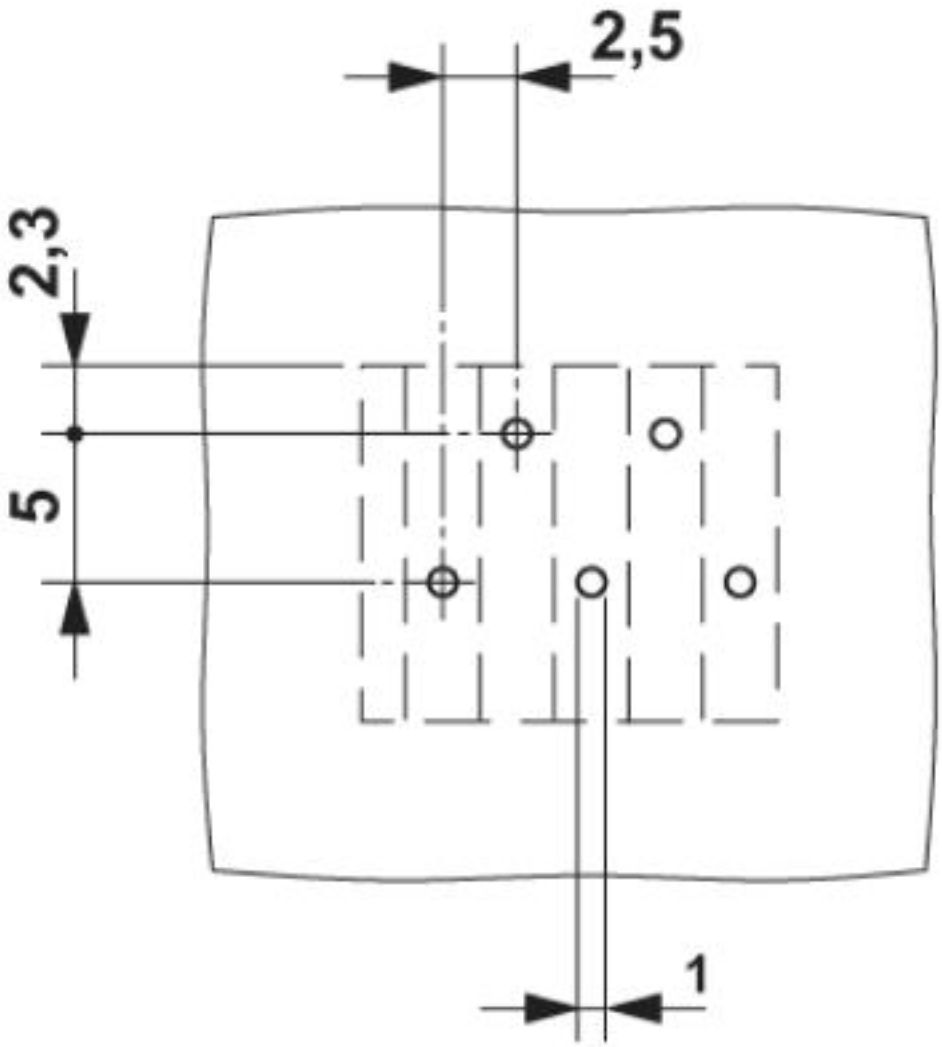

The illustration shows the 5-pos. version – Zig-zag pinning starts at the right-hand position. Other pinning available on request.

PCB terminal block - PTSA 0,5/12-2,5-Z - 1990106

Diagram

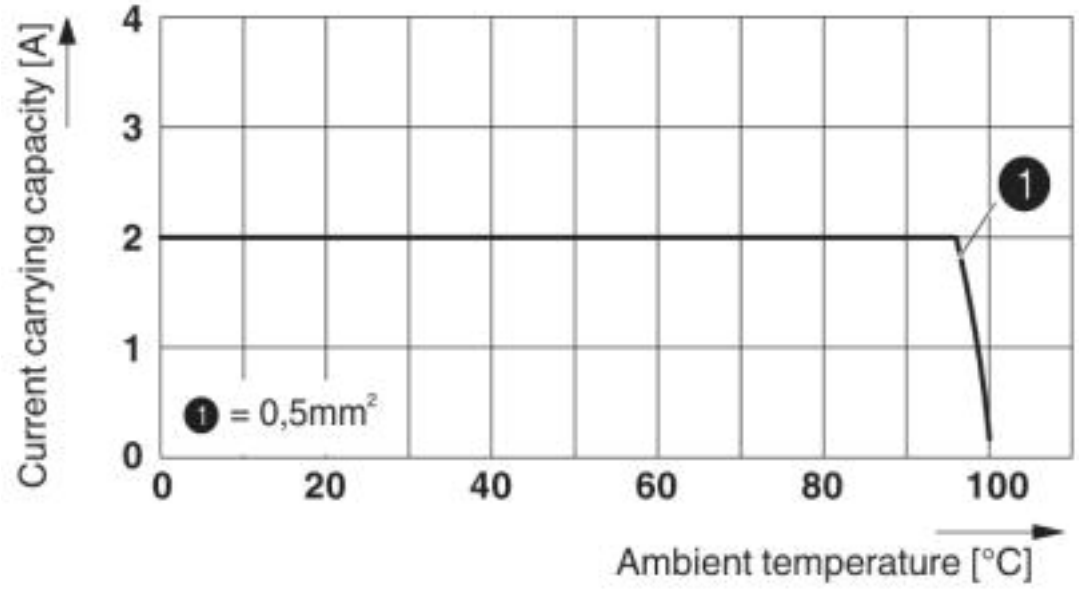

Derating diagram for 5 pins;reduction factor=1

Dimensioned drawing

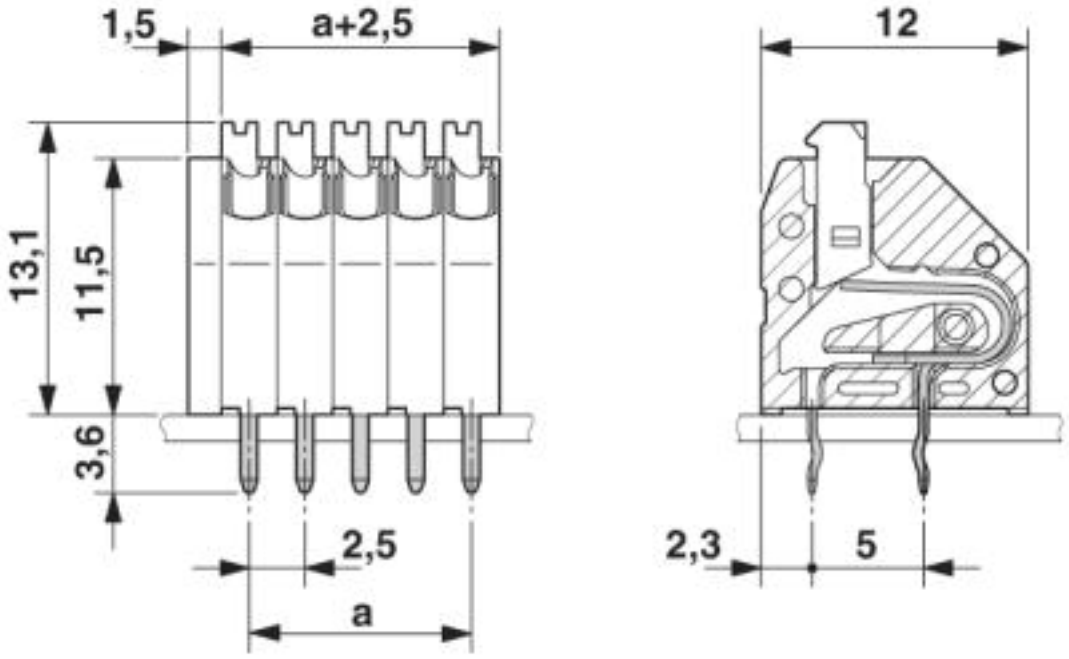

The illustration shows the 5-pos. version

© Phoenix Contact 2013 - all rights reserved
http://www.phoenixcontact.com