Base strip - IMC 1,5/ 6-G-3,81 - 1862616

Please be informed that the data shown in this PDF Document is generated from our Online Catalog. Please find the complete data in the user's documentation. Our General Terms of Use for Downloads are valid (http://download.phoenixcontact.com)



The figure shows a 10-position version of the product

Header, Nominal current: 8 A, Rated voltage (III/2): 160 V, Number of positions: 6, Pitch: 3.81 mm, Color: green, Contact surface: Tin, Assembly: Soldering

Product Features

- Combination with MC 1,5 pin strips for primary/secondary/PCB connection
- Plug-in direction horizontal and vertical to the PCB
- Use in shock-proof applications
- Clear separation of PCB inputs/outputs
- Individual position coding by removing the coding tab and connecting the coding profile to the counterpart

Key commercial data

package_quantity	50
GTIN	4017918133610

Technical data

Dimensions

Length	14.5 mm
Height	6.85 mm
Pitch	3.81 mm
Dimension a	19.05 mm
Pin dimensions	0,8 x 0,8 mm
Pin spacing	2.54 mm
Hole diameter	1.2 mm

General

Range of articles	IMC 1,5/..-G
Insulating material group	I
Rated surge voltage (III/3)	2.5 kV
Rated surge voltage (III/2)	2.5 kV
Rated surge voltage (II/2)	2.5 kV
Rated voltage (III/3)	160 V
Rated voltage (III/2)	160 V
Rated voltage (II/2)	320 V
Connection in acc. with standard	EN-VDE

Base strip - IMC 1,5/ 6-G-3,81 - 1862616

Technical data

General

Nominal current I_N	8 A
Maximum load current	8 A
Insulating material	PA
Inflammability class according to UL 94	V0
Color	green
Number of positions	6

classifications

eCl@ss

eCl@ss 4.0	272607xx
eCl@ss 4.1	27260701
eCl@ss 5.0	27260701
eCl@ss 5.1	27260701
eCl@ss 6.0	27260704
eCl@ss 7.0	27440402
eCl@ss 8.0	27440402

ETIM

ETIM 3.0	EC001121
ETIM 4.0	EC002637
ETIM 5.0	EC002637

UNSPSC

UNSPSC 6.01	30211810
UNSPSC 7.0901	39121409
UNSPSC 11	39121409
UNSPSC 12.01	39121409
UNSPSC 13.2	39121409

approvals

VDE Gutachten mit Fertigungsüberwachung / cUL Recognized / GOST / IECEE CB Scheme / UL Recognized / GOST / CCA / cULus Recognized /

Approval details

VDE Gutachten mit Fertigungsüberwachung

Nominal voltage UN	160 V
Nominal current IN	8 A

Base strip - IMC 1,5/ 6-G-3,81 - 1862616

approvals

mm²/AWG/kcmil	

cUL Recognized

Usegroups	B	D
Nominal voltage UN	300 V	300 V
Nominal current IN	8 A	8 A
mm²/AWG/kcmil		

GOST

IECEE CB Scheme

Nominal voltage UN	160 V
Nominal current IN	8 A
mm²/AWG/kcmil	

UL Recognized

Usegroups	B	D
Nominal voltage UN	300 V	300 V
Nominal current IN	8 A	8 A
mm²/AWG/kcmil		

CCA

Nominal voltage UN	160 V
Nominal current IN	8 A
mm²/AWG/kcmil	

cULus Recognized

Base strip - IMC 1,5/ 6-G-3,81 - 1862616

accessories

Labeled terminal marker

SK 3,81/2,8:FORTL.ZAHLEN - 0804109



Drawings

Drilling diagram

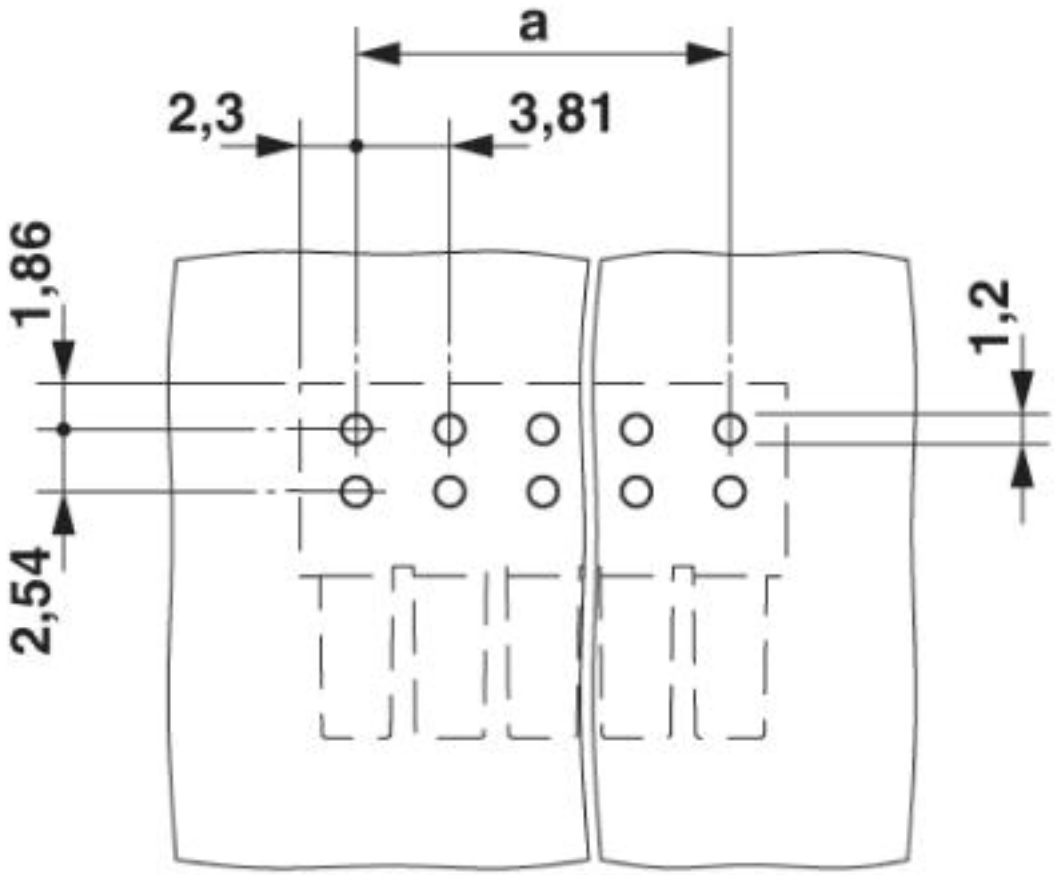

Base strip - IMC 1,5/ 6-G-3,81 - 1862616

Diagram

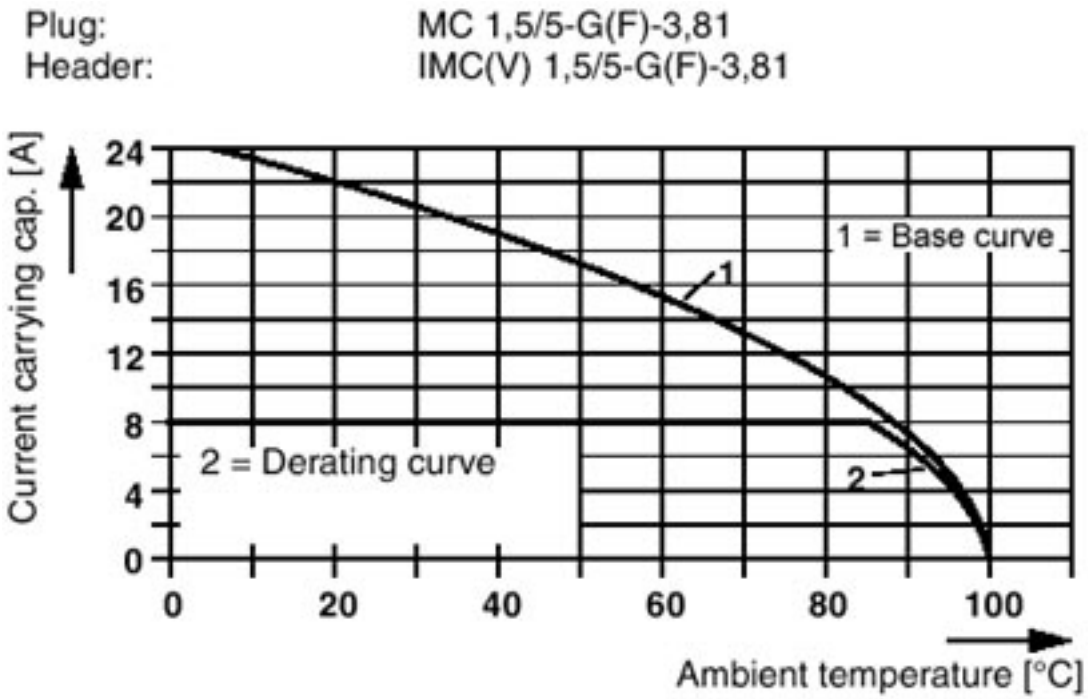

Type: IMC 1,5/...-G-3,81 with MC 1,5/...-G-3,81

Dimensioned drawing

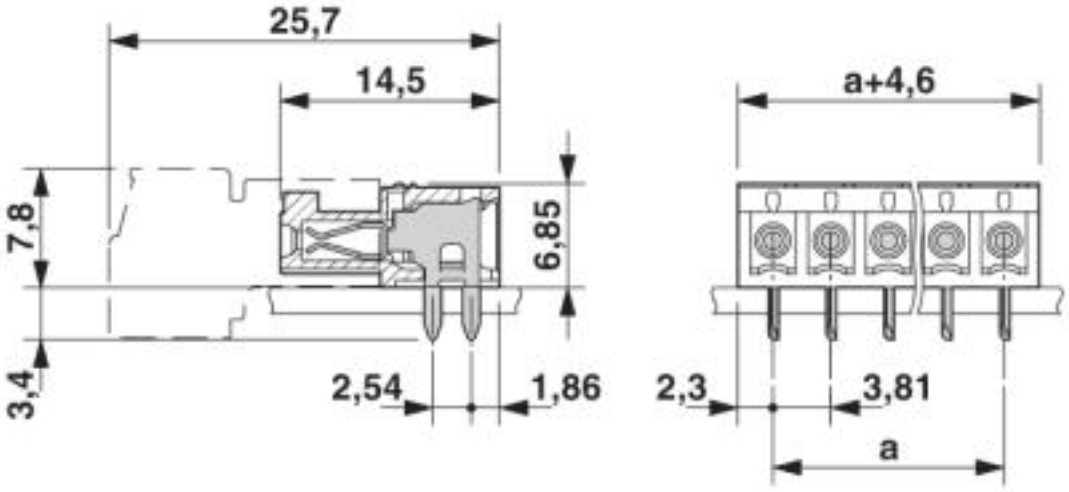

© Phoenix Contact 2013 - all rights reserved
http://www.phoenixcontact.com