# Printed-circuit board connector - FKCVW 2,5/ 4-ST-5,08 - 1873676

Please be informed that the data shown in this PDF Document is generated from our Online Catalog. Please find the complete data in the user's documentation. Our General Terms of Use for Downloads are valid (http://download.phoenixcontact.com)

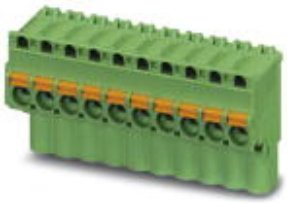

The figure shows a 10-position version of the product

Plug component, Nominal current: 12 A, Rated voltage (III/2): 320 V, Number of positions: 4, Pitch: 5.08 mm, Connection method: Spring-cage conn., Color: green, Contact surface: Tin

### Product Features

- Fast conductor connection thanks to Push-in spring-cage connection
- Conductor entry on the rippled side of the plug
- Two test connections for accommodating 2 mm Ø test pins or 2.3 mm Ø test plug

## Key commercial data

| | |
|---|---|
| **package_quantity** | 50 |
| **GTIN** | 4017918143060 |

## Technical data

### Dimensions

| | |
|---|---|
| **Pitch** | 5.08 mm |
| **Dimension a** | 15.24 mm |

### General

| | |
|---|---|
| **Range of articles** | FKCVW 2,5/..-ST |
| **Insulating material group** | I |
| **Rated surge voltage (III/3)** | 4 kV |
| **Rated surge voltage (III/2)** | 4 kV |
| **Rated surge voltage (II/2)** | 4 kV |
| **Rated voltage (III/3)** | 250 V |
| **Rated voltage (III/2)** | 320 V |
| **Rated voltage (II/2)** | 630 V |
| **Connection in acc. with standard** | EN-VDE |
| **Nominal current $I_N$** | 12 A |
| **Nominal cross section** | 2.5 mm² |
| **Maximum load current** | 12 A |
| **Insulating material** | PA |
| **Inflammability class according to UL 94** | V0 |
| **Internal cylindrical gage** | A2 |
| **Stripping length** | 10 mm |

# Printed-circuit board connector - FKCVW 2,5/ 4-ST-5,08 - 1873676

## Technical data

### General

| | |
|---|---|
| **Number of positions** | 4 |

### Connection data

| | |
|---|---|
| **Conductor cross section solid min.** | 0.2 mm² |
| **Conductor cross section solid max.** | 2.5 mm² |
| **Conductor cross section stranded min.** | 0.2 mm² |
| **Conductor cross section stranded max.** | 2.5 mm² |
| **Conductor cross section stranded, with ferrule without plastic sleeve min.** | 0.25 mm² |
| **Conductor cross section stranded, with ferrule without plastic sleeve max.** | 2.5 mm² |
| **Conductor cross section stranded, with ferrule with plastic sleeve min.** | 0.25 mm² |
| **Conductor cross section stranded, with ferrule with plastic sleeve max.** | 2.5 mm² |
| **Conductor cross section AWG/kcmil min.** | 24 |
| **Conductor cross section AWG/kcmil max** | 12 |
| **2 conductors with same cross section, stranded, TWIN ferrules with plastic sleeve, min.** | 0.5 mm² |
| **2 conductors with same cross section, stranded, TWIN ferrules with plastic sleeve, max.** | 1.5 mm² |
| **Minimum AWG according to UL/CUL** | 26 |
| **Maximum AWG according to UL/CUL** | 12 |

## classifications

### eCl@ss

| | |
|---|---|
| **eCl@ss 4.0** | 272607xx |
| **eCl@ss 4.1** | 27260701 |
| **eCl@ss 5.0** | 27260701 |
| **eCl@ss 5.1** | 27260701 |
| **eCl@ss 6.0** | 27260704 |
| **eCl@ss 7.0** | 27440402 |
| **eCl@ss 8.0** | 27440402 |

### ETIM

| | |
|---|---|
| **ETIM 3.0** | EC001121 |
| **ETIM 4.0** | EC002638 |
| **ETIM 5.0** | EC002638 |

### UNSPSC

| | |
|---|---|
| **UNSPSC 6.01** | 30211810 |
| **UNSPSC 7.0901** | 39121409 |
| **UNSPSC 11** | 39121409 |
| **UNSPSC 12.01** | 39121409 |

# Printed-circuit board connector - FKCVW 2,5/ 4-ST-5,08 - 1873676

## classifications

### UNSPSC

| | |
|---|---|
| **UNSPSC 13.2** | 39121409 |

## approvals

UL Recognized / VDE Gutachten mit Fertigungsüberwachung / cUL Recognized / GOST / IECEE CB Scheme / GOST / CCA / cULus Recognized /

### Approval details

**UL Recognized**

| **Usegroups** | **B** | **D** |
|---|---|---|
| Nominal voltage UN | 300 V | 300 V |
| Nominal current IN | 10 A | 10 A |
| mm²/AWG/kcmil | 26-12 | 26-12 |

**VDE Gutachten mit Fertigungsüberwachung**

| | |
|---|---|
| Nominal voltage UN | 250 V |
| Nominal current IN | 12 A |
| mm²/AWG/kcmil | 0.2-2.5 |

**cUL Recognized**

| **Usegroups** | **B** | **D** |
|---|---|---|
| Nominal voltage UN | 300 V | 300 V |
| Nominal current IN | 10 A | 10 A |
| mm²/AWG/kcmil | 26-12 | 26-12 |

**GOST**

**IECEE CB Scheme**

| | |
|---|---|
| Nominal voltage UN | 250 V |

# Printed-circuit board connector - FKCVW 2,5/ 4-ST-5,08 - 1873676

## approvals

| | |
|---|---|
| Nominal current IN | 12 A |
| mm²/AWG/kcmil | 0.2-2.5 |

| CCA | |
|---|---|
| | |
| Nominal voltage UN | 250 V |
| Nominal current IN | 12 A |
| mm²/AWG/kcmil | 0.2-2.5 |

cULus Recognized

## accessories

### Coding element

CP-MSTB - 1734634



### Test plug terminal block

MPS-MT - 0201744



RPS - 0201647



# Printed-circuit board connector - FKCVW 2,5/ 4-ST-5,08 - 1873676

## accessories

**Screwdriver tools**

SZS 0,6X3,5 - 1205053



**Labeled terminal marker**

SK 5,08/3,8:FORTL.ZAHLEN - 0804293



## accessories

STZ 4-FKC-5,08 - 1876877



STZ 8-FKC-5,08 - 1876880

## Drawings

# Printed-circuit board connector - FKCVW 2,5/ 4-ST-5,08 - 1873676

Dimensioned drawing

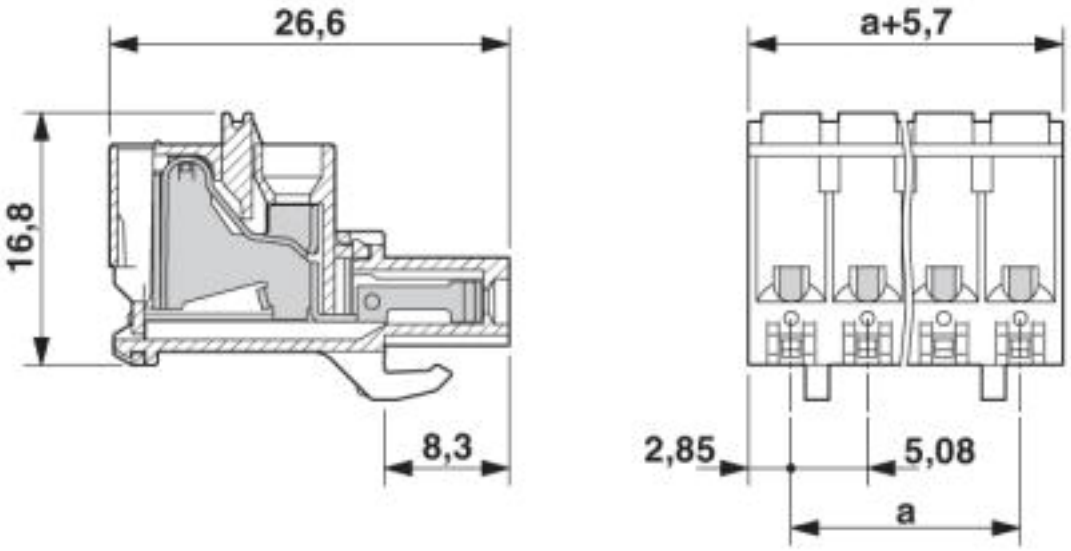


© Phoenix Contact 2013 - all rights reserved
http://www.phoenixcontact.com